(No Model.)

J. W. HERRON.

STOCK FOUNTAIN.

No. 590,615. Patented Sept. 28, 1897.

Fig. 1.

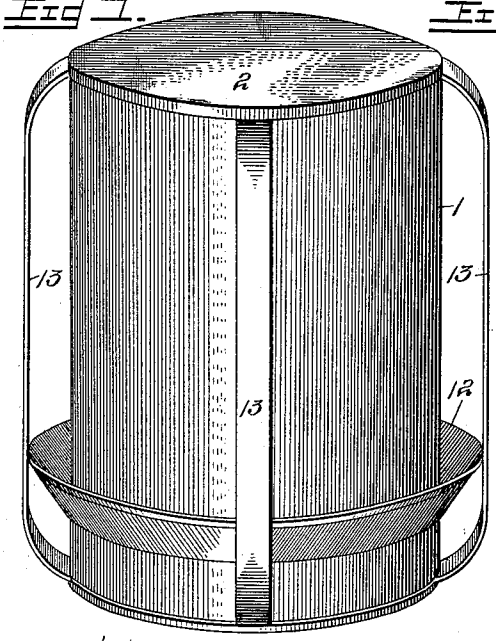

Fig. 2.

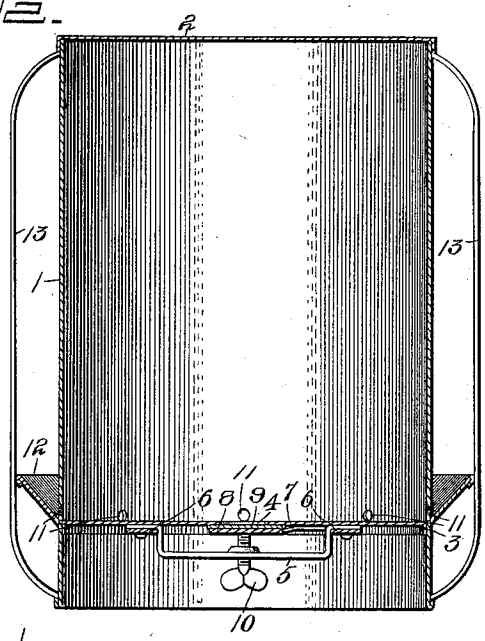

Fig. 3.

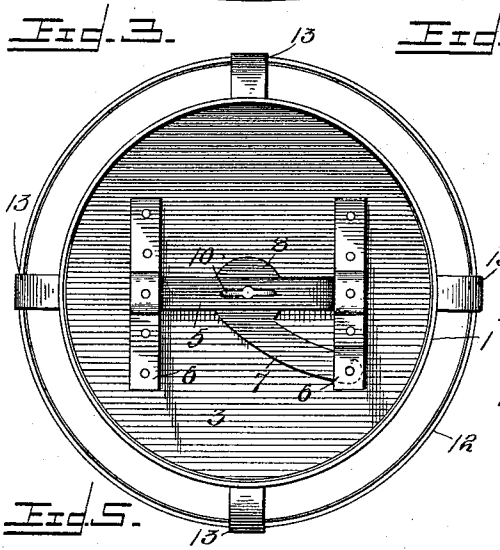

Fig. 4.

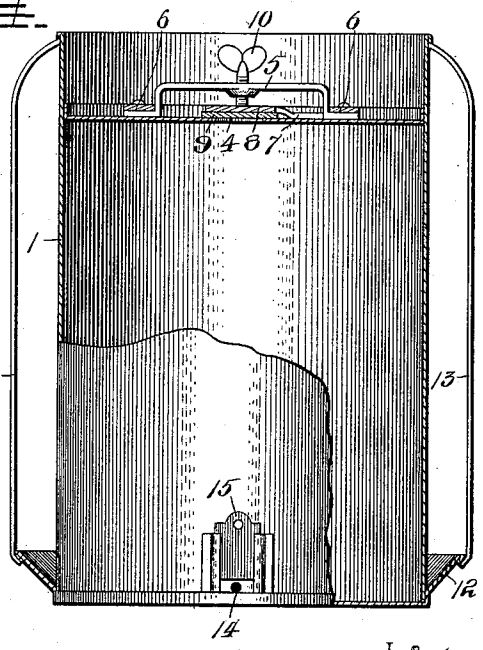

Fig. 5.

Inventor
John W. Herron.

Witnesses
W. J. Ladard,
Jno. N. Cromwell

By his Attorneys,
C. A. Snow & Co.

THE NORRIS PETERS CO., PHOTO-LITHO., WASHINGTON, D. C.

UNITED STATES PATENT OFFICE.

JOHN W. HERRON, OF COON RAPIDS, IOWA.

STOCK-FOUNTAIN.

SPECIFICATION forming part of Letters Patent No. 590,615, dated September 28, 1897.

Application filed May 27, 1896. Serial No. 593,280. (No model.)

To all whom it may concern:

Be it known that I, JOHN W. HERRON, a citizen of the United States, residing at Coon Rapids, in the county of Carroll and State of Iowa, have invented a new and useful Stock-Fountain, of which the following is a specification.

My invention relates to stock-fountains designed especially for supplying water to poultry, swine, and the like; and the object in view is to provide a device having a reservoir constructed with means to facilitate the filling thereof, and, furthermore, to provide an exterior trough or series of drinking-cups and means for protecting the outer edges thereof against inward bending.

Further objects and advantages of this invention will appear in the following description, and the novel features thereof will be particularly pointed out in the appended claim.

In the drawings, Figure 1 is a perspective view of a fountain constructed in accordance with my invention. Fig. 2 is a vertical central section of the same. Fig. 3 is a bottom plan view. Fig. 4 is a side view partly in section, showing a modification.

Similar numerals of reference indicate corresponding parts in all the figures of the drawings.

1 designates a reservoir, preferably of cylindrical construction, having an imperforate head 2, which is flush with the contiguous edge of the side wall and provided at the opposite end with a head 3, which is set in from the contiguous edge of the side wall to form a basin or receptable bounded by the projecting portion of the side wall. This set-in head 3 is provided with a central inlet-opening 4, spanned by a yoke 5, of which the ends are secured by clips 6. A valve or gate 8 is used in connection with said inlet-opening and is provided with an arm 7, which is pivoted at its extremity to one of the clips 6 in such a position as to allow the valve or gate to be swung either into or out of alinement with the inlet-opening, and carried by the valve or gate is a packing-disk 9 for contact with the surface of the head 3. In order to lock the valve or gate in its operative position, I employ a thumb-screw 10, which is threaded in a central opening in the yoke 5.

The reservoir is provided exteriorly with a trough 12, which communicates with the interior of the reservoir by means of outlet-openings 11, preferably located contiguous to one head of the reservoir and at the bottom of the trough, whereby atmospheric pressure is utilized to prevent the trough from overflowing, and yet allow the liquid therein to be maintained at a uniform depth by reason of the supply being continuous during the removal of liquid from the trough. This exterior trough is protected by means of longitudinal straps 13, which terminate at the extremities of the side wall of the reservoir and project outwardly to the periphery of the trough. In order to fill the reservoir of the form of fountain illustrated in Figs. 1 to 3, inclusive, it is necessary to invert it in order that the head 3 may be uppermost, in which position the basin or receptacle which is formed by said head and the projecting portion of the side wall of the reservoir is adapted to receive water, which thence passes through the inlet-opening 4 into the interior of the reservoir, the valve or gate 8 having been displaced to expose said opening. After the desired quantity of liquid has been introduced the valve may be replaced and the reservoir returned to its normal or upright position, illustrated in Figs. 1 and 2.

In the modification illustrated in Fig. 4 the flush head is located at the lower end of the reservoir and the set-in head at the upper end thereof, whereby it is unnecessary to invert the fountain in order to introduce liquid into the reservoir. The construction of the parts is the same as that above described, with the exception that the trough 12 is fed by outlet-openings 14, which are preferably provided with independent slide-gates 15.

From the above description it will be seen that the fountain embodies a cylindrical shell closed at its ends by heads, of which one is flush with the edge of the side wall while the other is set in to form a basin or receptacle to facilitate filling, and that the trough from which the stock are supplied is located with its bottom flush with that head which is lowermost when the fountain is in its upright or normal position. For instance, in the form of my apparatus which is illustrated in Figs. 1 to 3, inclusive, the trough is arranged above

the lower edge of the side wall of the shell, whereas in Fig. 4 it is located contiguous to said lower edge. In all forms of the apparatus illustrated in the drawings the guard-straps 13 are terminally secured to the opposite edges of the shell and project laterally a distance equal to the projection of the trough in order to protect the edge of the latter from inward bending. These guard-straps are of special advantage in connection with the form of apparatus illustrated in Figs. 1 to 3, in that the inversion of the fountain, in order to supply the reservoir, may be accomplished without the risk of injuring the trough. The straps form suitable rockers, upon which the fountain may be turned.

Various changes in the form, proportion, and the minor details of construction may be resorted to without departing from the spirit or sacrificing any of the advantages of this invention.

Having described my invention, what I claim is—

In a stock-fountain, a cylindrical reservoir having an exterior trough, openings communicating with such trough, and provided at one end with a set-in head forming a filling-basin and having an inlet-opening 4, a pair of oppositely-located clips 6 fitted to said head at opposite sides of the opening therein, a U-shaped yoke 5 arranged exterior to said head over the inlet-opening and secured at its extremities under said clips, a valve-plate 8 carrying a packing-disk and having an arm extension 7 pivoted at its extremity to one of said clips 6, and a set-screw 10 mounted in said yoke and adapted to impinge against the valve-plate when the same lies over the inlet-opening, substantially as set forth.

In testimony that I claim the foregoing as my own I have hereto affixed my signature in the presence of two witnesses.

JOHN W. HERRON.

Witnesses:
M. TRULLINGER,
J. W. HANDY.