March 9, 1926. 1,575,791

J. H. POSTEL

MOP

Filed Nov. 28, 1924

Fig. 1.

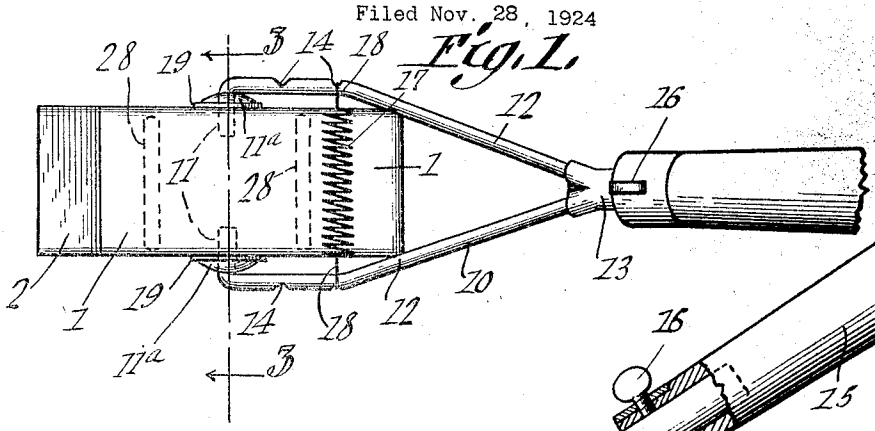

Fig. 2.

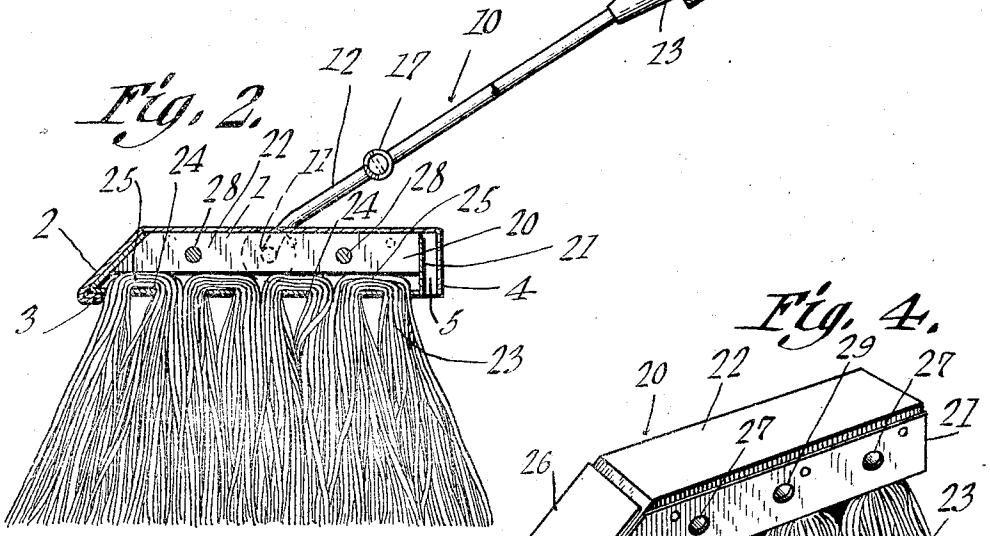

Fig. 4.

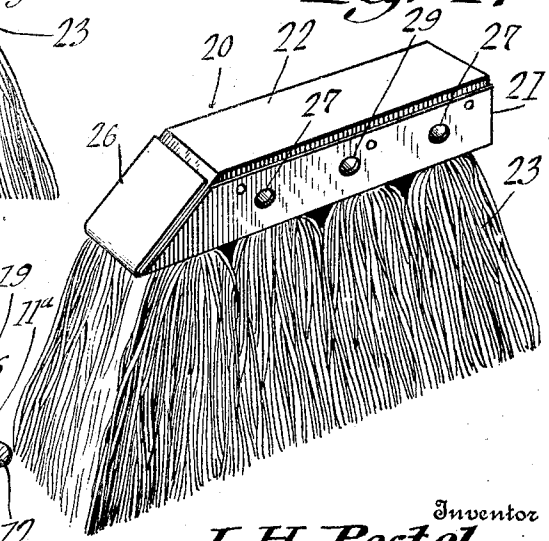

Fig. 3.

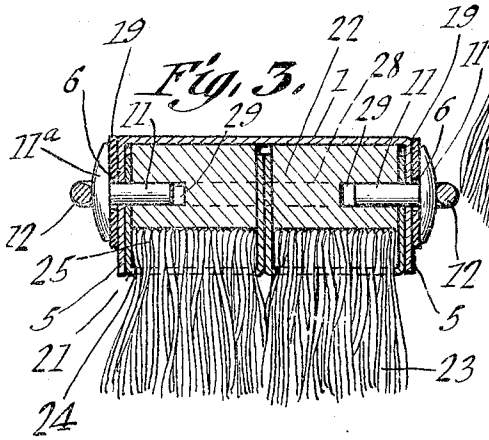

Inventor

J. H. Postel

By C. A. Snow & Co.

Attorneys

Patented Mar. 9, 1926. 1,575,791

UNITED STATES PATENT OFFICE.

JACOB HENRY POSTEL, OF SAN MATEO, CALIFORNIA.

MOP.

Application filed November 28, 1924. Serial No. 752,644.

To all whom it may concern:

Be it known that I, JACOB HENRY POSTEL, a citizen of the United States, residing at San Mateo, in the county of San Mateo and State of California, have invented a new and useful Mop, of which the following is a specification.

This invention relates to brushing and scrubbing and more particularly to mops.

The object of the invention is to construct a mop from a plurality of sections detachably connected and held securely assembled in a casing having an operating handle connected therewith.

Another object of the invention is to provide a mop composed of a plurality of fillers constructed so that the strands will be securely held in position to prevent them from being pulled out during use.

Another object of the invention is to provide a mop, the holder or head of which is designed to receive a plurality of fillers secured in position by the handle and by cooperating elements on the casing.

With the foregoing and other objects in view which will appear as the description proceeds, the invention resides in the combination and arrangement of parts and in the details of construction hereinafter described and claimed, it being understood that changes in the precise embodiment of the invention herein disclosed may be made within the scope of what is claimed without departing from the spirit of the invention.

In the accompanying drawings:—

Figure 1 represents a plan view of a mop constructed in accordance with this invention, the handle being broken off;

Fig. 2 is a longitudinal section through the mop head with the handle shown partly in elevation and partly in section;

Fig. 3 is a transverse section taken on the line 3—3 of Fig. 1; and

Fig. 4 is a detail perspective view with one of the filler sections removed.

In the embodiment illustrated the mop constituting this invention comprises a head or casing 1 preferably constructed of metal, nickeled or otherwise suitably finished with one end beveled as shown at 2 and provided with an inturned lip 3 for a purpose presently to be described. The wall at the opposite end of the casing 1 is made rectilinear as shown at 4 and the side walls 5 thereof are apertured at diametrically opposite points as shown at 6 to receive inturned fingers 11 or a wire handle connector 10. This casing 1 may be of any suitable size according to the number of filler units it is designed to contain, the one here shown being of a size to accommodate two units.

The handle connector 10 is shown made of heavy wire Y-shaped in form with the arms 12 thereof diverging from its shank 13 which is made in the form of a coupling designed to be inserted in a handle 15 and secured by a set screw 16. The front portions of the arms 12 are made parallel and are equipped at their free ends with inturned fingers 11 which are designed to be inserted through the openings 6 in the side walls of the brush head or casing 1 and enter apertures or sockets in the outer faces of the filler units 20 as will be hereinafter more fully described. The parallel portions of the arms 12 of the handle connector 10 are provided on their outer faces with longitudinally spaced notches 14 designed to receive loops or eyes 18 carried by the ends of a coiled spring 17 which is designed to span the space between the arms of the connector and exert its tension to hold them in clamping engagement with the brush head.

Suitable rubber gaskets or washers 19 are arranged between the outside faces of the side walls of the casing 1 and clamping disks 11^a which are fixedly mounted on the fingers 11 preferably at their junction with the arms 12. These gaskets are designed to ensure tight clamping of the filler units within the casing which is especially necessary when the filler units are used on a wet mop, the drag of which is very heavy.

The filler units 20 are each composed of a sheet metal casing 21 having a wooden clamping core 22 shaped to conform to the casing 21 and to fit therein for securing the strands 23 of the filler. These strands 23 are arranged in groups or bunches and are threaded through transversely extending openings 24 formed in the bottom of the casing 21, the top of this casing being closed by the core 22. The groups of strands 22 are folded midway their length as shown clearly in Fig. 2 which is customary in making mops and the looped portions 25 thereof are arranged in the casing 21 and securely held by the core 22. It is of course understood that these

loops may be made of strands of any desired length according to the size of the mop to be made.

These filler units 20 have beveled front ends 26 and straight ends as is shown clearly in Figs. 2 and 4 conforming to the shape of the casing 1 but being made slightly shorter than said casing so that they may be readily inserted and removed therefrom by slipping the beveled noses 26 within the beveled portion 2 of the casing under the lip 3 so that when the units are to be removed it will be only necessary to move them longitudinally rearward to disengage their noses from the lip 3 and they may be lifted out.

These units 20 have longitudinally spaced apertures 27 extended transversely therethrough from side to side to receive pins 28 which are placed loosely in these apertures for connecting the units to assist in holding them assembled.

The units are also provided in their opposed side walls at diametrically opposite points with laterally extending sockets 29 designed to receive the inturned fingers 11 of the handle connector 10 which passing through the side walls of casing 1 and entering these sockets is designed to hold the units securely within the casing. This is accomplished by adjusting the coiled spring 17 in the notches 14 of the side members 12 of said connector thereby creating tension on these arms 12 and securely holding the fillers in the casing and at the same time allowing the face of the mop to adapt itself to any angle. By using these loosely extending pins 28 for connecting the units 20 said units may be readily interchanged or replaced.

In the use of this mop when it is desired to remove a filler unit 20 for any purpose the tension spring 17 is moved backwardly to a narrow point on the main wires 12 and permits the front portions of said wires to be pulled apart sufficiently to disengage the fingers 11 from the sockets 29 and the openings 6 in the casing 1. After the connector 10 has been so removed any one or more of the filler units 20 may be slipped out of the casing in the manner above described for washing or replacing or for interchanging, it being often times desirable to remove the two center units on which the wear is greater than on the outside units and substitute the outside units for them and place the center units on the outside.

After the units have been adjusted in the desired manner the handle connector 10 is replaced and the spring 7 moved forward to tightly clamp the units in the casing 1.

By detachably connecting the handle 15 with the connector 10 a long or short handle may be used at will.

From the above description it will be obvious that a single mop head or casing 1 may be used with any desired number of filler units, that is the units 20 may be removed and others inserted according to the uses for which the mop is intended.

I claim:—

1. A mop comprising a casing having a filler unit mounted therein, said unit comprising a frame carrying cleaning elements, said unit and casing having registering apertures in their opposed side walls, a handle connector having clamping arms provided with inturned fingers engaging said apertures to securely connect the casing and the unit with each other and with the handle.

2. A mop having a handle and comprising a casing having a beveled front end with an inturned lip, a filler unit comprising a frame conforming in shape to the casing and of less length than the casing to provide for its ready insertion and removal, said frame having cleaning material carried by it, the beveled nose of the unit fitting under the lip of the casing, and a handle connector detachably connecting the unit to the casing and the handle.

3. A mop comprising a casing having a filler unit removably mounted therein, said unit comprising a frame carrying cleaning material, said unit and casing having registering apertures in the side walls thereof, a Y-shaped handle connector having inturned fingers at the free ends and adapted to extend into said registering apertures, and a coiled spring connecting the arms of said connector for clampingly securing the units to the casing.

In testimony that I claim the foregoing as my own, I have hereto affixed my signature.

JACOB HENRY POSTEL.