United States Patent [19]

Klar

[11] **3,717,991**

[45] **Feb. 27, 1973**

[54] IMPACT TIME INDICATOR

[75] Inventor: **John Klar,** Boylston, Mass.

[73] Assignee: **The Heald Machine Company,** Worcestor, Mass.

[22] Filed: **June 18, 1971**

[21] Appl. No.: **154,682**

[52] **U.S. Cl.** .....**58/152 R,** 58/39.5

[51] **Int. Cl.** **G04b 37/12,** G04f 9/04

[58] **Field of Search** .....58/33, 39.5, 145 R, 152; 200/33 A, 33 D, 61.08, 61.45 R, 61.45 M

[56] **References Cited**

UNITED STATES PATENTS

3,429,121	2/1969	Parker	58/145 R
2,981,093	4/1961	Rhea	58/39.5

Primary Examiner—Richard B. Wilkinson
Assistant Examiner—Edith C. Simmons Jackmon
Attorney—Norman S. Blodgett

[57] **ABSTRACT**

This invention relates to an impact time indicator and, more particularly, to apparatus for insertion in a container for shipping delicate devices to indicate the time when an accident takes place.

8 Claims, 3 Drawing Figures

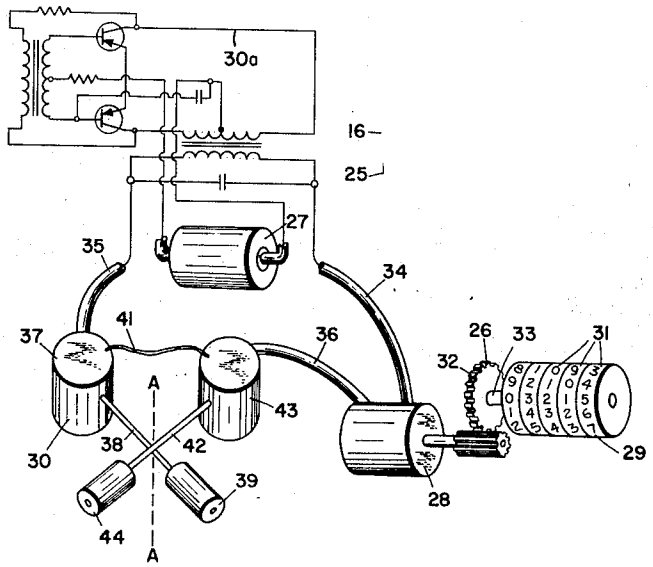

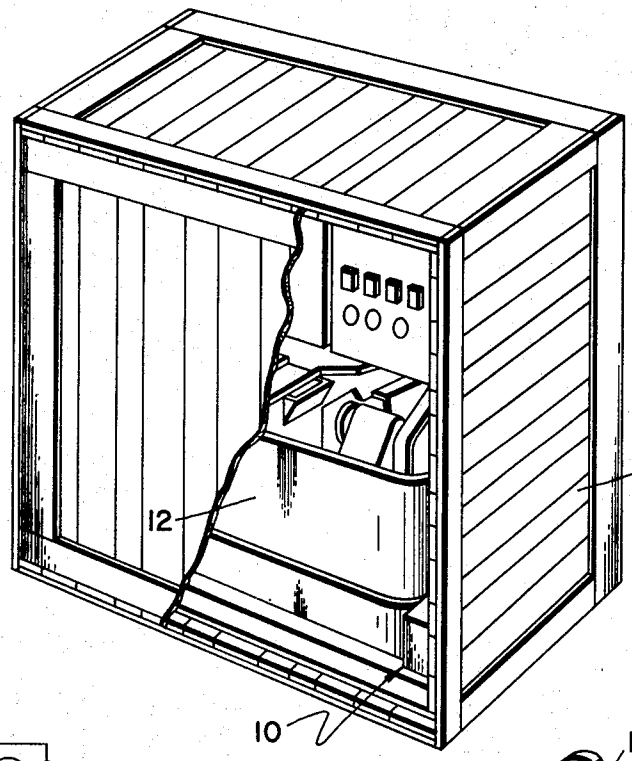

FIG. 1

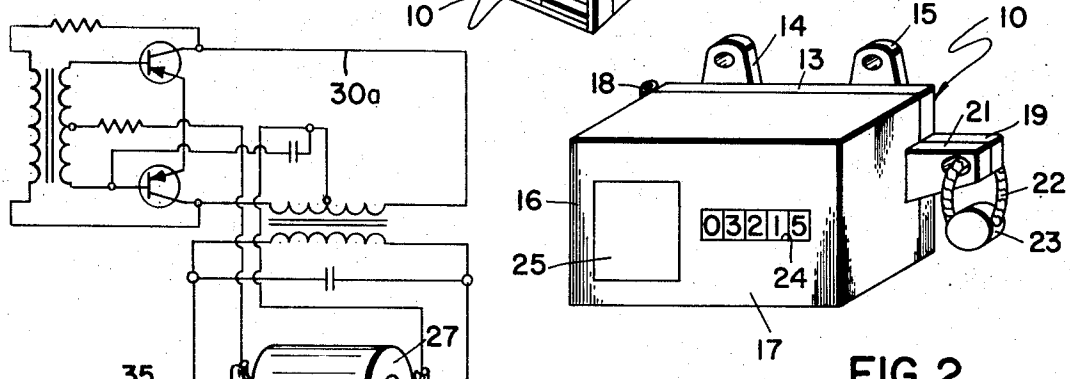

FIG. 2

FIG. 3

INVENTOR.
JOHN KLAR

BY Norman S. Blodgett
ATTORNEY

IMPACT TIME INDICATOR

BACKGROUND OF THE INVENTION

One of the problems in the shipment of delicate tools and instruments is that they are often damaged in transit. This is particularly true in the case of machine tools such as internal grinding machines. Such machinery represents tremendously-high tolerances in relationship of parts for the accurate grinding of workpieces and is very expensive. When such damage occurs, it is usually not discovered until the shipping crate is opened at the installation point, which may be thousands of miles away from the original shipping point. It is important to know where the accident which caused the damage took place so that responsibility can be established. Trying to find out such information is, of course, quite difficult because the persons responsible for the accident are usually quite loathe to reveal that fact. Only the most intensive type of detective work can discover the true facts and, even then, the establishment of the time and place of the accident is sometimes possible. These and other difficulties experienced with the prior art devices have been obviated in a novel manner by the present invention.

It is, therefore, an outstanding object of the invention to provide an impact time indicator for indicating the time when an accident takes place which involves a shipping container.

With this and other objects in view, as will be apparent to those skilled in the art, the invention resides in the combination of parts set forth in the specification and covered by the claims appended hereto.

SUMMARY OF THE INVENTION

In general, the invention relates to an impact time indicator for use with a container enclosing a delicate mechanism or the like. A housing is provided which is adapted to be fastened to the interior of the container. A clock is mounted in the housing and means is provided for terminating the clock operation when the container receives a shock in excess of a predetermined value.

BRIEF DESCRIPTION OF THE DRAWINGS

The character of the invention, however, may be best understood by reference to one of its structural forms, as illustrated by the accompanying drawings, in which:

FIG. 1 is a perspective view showing in use an impact time indicator embodying the principles of the present invention,

FIG. 2 is a perspective view of the indicator, and

FIG. 3 is a perspective view of the inner mechanism of the indicator.

DESCRIPTION OF THE PREFERRED EMBODIMENT

Referring first to FIG. 1, wherein are best shown the general features of the invention, the impact time indicator, indicated by the reference numeral **10**, is shown as fastened to the interior surface of a shipping crate **11**, one side of which has been broken away to reveal the contents. The crate contains for shipment a delicate device, such as an internal grinding machine **12**. The machine is of such a nature, because of delicate hydraulic, electrical, and mechanical parts,

that it could be substantially damaged, if the container **11** with its contents were dropped, fell over, or were struck by a vehicle.

FIG. 2 shows the exterior of the indicator **10**. It has a base plate **13** provided with apertured ears **14** and **15** by which it can be screwed to the interior surface of the container. It will be understood that the indicator could be placed in any part of the container and even on the machine **12** itself. The indicator is provided with an exterior housing **16** consisting of the aforementioned base plate **13** and a hollow sheet metal cover **17**. The cover **17** is attached to the base plate **13** on one side by a hinge **18** and at the other side by means of two latch ears **19** and **21** which are apertured and joined by a steel cable **22** whose ends are locked in a lead seal **23**. The front face of the cover **17** is provided with a window **24** through which the time can be seen. A plate **25** is mounted on the front of the machine and may indicate the ownership of the indicator; it may also give certain legal notices relative to the consequences of tampering with the indicator.

FIG. 3 shows the mechanism mounted on the interior of the housing **16**. Generally speaking, it consists of a clock **26** and a means **30**, such as a shock-operated switch, for terminating the clock operation when the container receives a shock in excess of a predetermined value. The clock consists of a storage battery **27**, a pulsing circuit **30a**, an alternating current motor **28**, and a clock mechanism **29**, this latter consisting of a series of number-carrying discs **31** mounted on a common axis and driven by gears **32**. The mechanism **29** is of the well-known type in which the rotation of a shaft **33** at a suitable speed will cause the discs **31** to rotate at different speeds to indicate by numerals in a straight line the elapsed time. One side of the motor **28** is connected by a wire **34** to one side of the circuit **30*a***, the other side of which is connected by a wire **35** to the means **30**. The other side of the motor **28** is connected by a wire **36** to the means **30**.

The means **30** consists of a weight **37** mounted on one end of an arm **38**, on the other end of which is mounted a smaller weight **39**. To the weight **37** is connected the wire **35** leading to the battery **27** and from the weight also extends a fine, delicate wire **41**. The arm **38** is pivoted about an axis A—A which, in the preferred embodiment, extends in the vertical direction or parallel to the broad flat surface of the base plate **13** of the housing. Another arm **42** is pivotally mounted for turning about the same axis A—A and carries a weight **43** at one end and a smaller weight **44** at the other end. The wire **36** leading to the motor **28** is connected to the weight **43** and the other end of the delicate wire **41** is also connected to that same weight. In other words, the wire **41** joins the two weights. This connection between the delicate wire **41** and the wires **35** and **36** is an electrical connection as well as a mechanical connection and it allows current to flow around the circuit from the battery **27**, through the circuit **30*a***, through the wire **35**, the weight **37**, the wire **41**, the weight **43**, and the wire **36**, the motor **28**, and through the wire **34** and the circuit **30*a*** to the battery **27** again.

The operation of the invention will now be readily understood in view of the above description. The base plate **13** is screwed to the inner surface of the packing

case 11 and, before the housing is locked, the clock is set for "zero" time. Its operation is started by completing the circuit between the battery, the circuit 30*a*, the motor, etc. The circuit 30*a* generates electrical pulses at an exact rate and causes the motor to rotate, which motor operates through the gears 32 to rotate the shaft 33. The figures which appear at the window 24 show the elapsed time since the clock was set and, of course, the clock will be set by a person whose certificate of starting time may be suitably authenticated, as by signing before a notary public this setting would take place when the mechanism is placed in the crate. This would be before the crate is shipped with the mechanism 12 in its indicator. The packing crate 11 is closed with the indicator 10 on the inside and shipment takes place. If, during the shipment of the packing crate and machinery, a shock is received, this will result in the weights 37 and 43 moving about their vertical pivot A—A and, because of the fact that they are mounted in different planes, this will result in the breaking of the delicate wire 41 which join the two weights. This interrupts the circuit between the battery and the motor 28 and stops the clock. When the shipment reaches its final destination and it is discovered that the machine 12 has been damaged in transit, it is only necessary to look at the indicator 10 to determine the time at which the accident took place. It is then a simple matter to determine who was responsible for the custody of the shipping crate at that time and liability is clearly established.

It is obvious that minor changes may be made in the form and construction of the invention without departing from the material spirit thereof. It is not, however, desired to confine the invention to the exact form herein shown and described, but it is desired to include all such as properly come within the scope claimed.

The invention having been thus described, what is claimed as new and desired to secure by Letters Patent is:

1. An impact time indicator for use with a container enclosing a delicate device or the like, comprising
   a. a housing adapted to be fastened in the interior of the container,
   b. a clock mounted in the housing capable of registering long periods of time, consisting of a stack of numbered discs mounted on a common axis and driven by an alternating current motor energized by a pulsing circuit,
   c. means for terminating the clock operation when the container receives a shock in excess of a predetermined value, wherein said means is a shock-operated switch consisting of two pivoted weights located in different planes and joined by a delicate wire which disconnects the circuit from the motor when the shock is received.

2. An indicator as recited in claim 1, wherein each weight is mounted on one end of an arm with a smaller weight on the other end, the pivotal axis being located at an intermediate point on the arm.

3. An impact time indicator for use with a container enclosing a delicate device or the like, comprising
   a. a housing adapted to be fastened in the interior of the container,
   b. a clock including a motor is mounted in the housing capable of registering long periods of time, and
   c. means for terminating the clock operation when the container receives a shock in excess of a predetermined value, said means consisting of a shock-operated fuse which disconnects a circuit from the motor when the shock is received.

4. An indicator as recited in claim 3, wherein the housing encloses the clock and the said means and cannot be opened by unauthorized persons without it being evident.

5. An indicator as recited in claim 3, wherein the clock consists of a stack of numbered discs mounted on a common axis, the motor is an alternating current motor, and the motor is energized by a pulsing circuit.

6. An indicator as recited in claim 3, wherein the switch consists of a weight pivoted for movement about an axis separated from itself and including a delicate wire connected in the circuit-motor connections.

7. An indicator as recited in claim 6, wherein the switch consists of two pivoted weights located in different planes and joined by the said delicate wire.

8. An indicator as recited in claim 7, wherein each weight is mounted on one end of an arm with a smaller weight on the other end, the pivotal axis being located at an intermediate point on the arm.

* * * * *