United States Patent [19]

Spencer

[11] **3,879,773**

[45] **Apr. 29, 1975**

[54] **CRIB**

[76] Inventor: **Aaron D. Spencer,** 69 Farlow Rd., Newton, Mass. 02158

[22] Filed: **Jan. 8, 1974**

[21] Appl. No.: **431,709**

[52] **U.S. Cl.** **5/100;** 5/11

[51] **Int. Cl.** **A47d 9/00;** E03d 11/10

[58] **Field of Search** 312/107, 111; 5/11, 100

[56] **References Cited**

UNITED STATES PATENTS

3,131,829	5/1964	Masser	220;312/102;111 UX
3,383,718	5/1968	Spencer	5/100
3,634,894	1/1972	Harbison	5/100
3,786,524	1/1974	Mathou	5/100

Primary Examiner—Casmir A. Nunberg

Attorney, Agent, or Firm—Ross, Ross & Flavin

[57] **ABSTRACT**

In a method for a manufacturer of packaging a crib for the ready assembly thereof by the ultimate purchaser, the steps of prefabricating the headboard and footboard as subassemblies complete with connecting half parts and the sides as subassemblies complete with mating connecting half parts.

7 Claims, 8 Drawing Figures

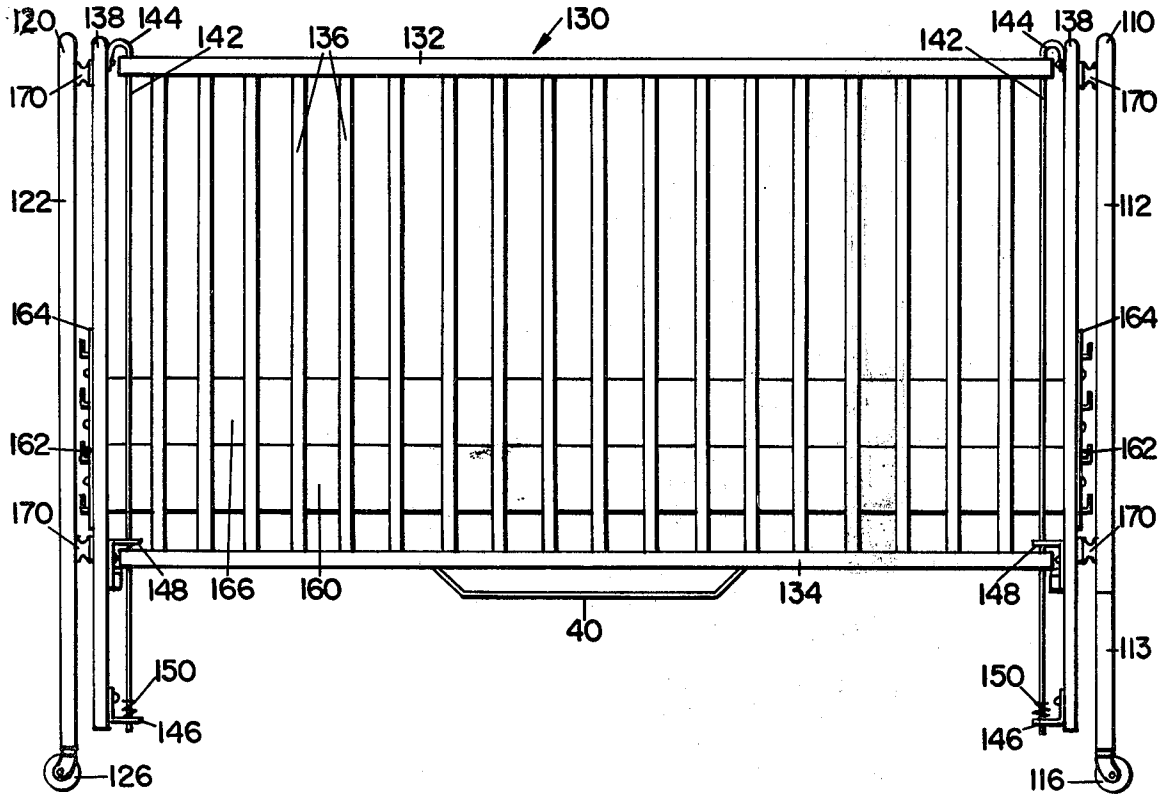

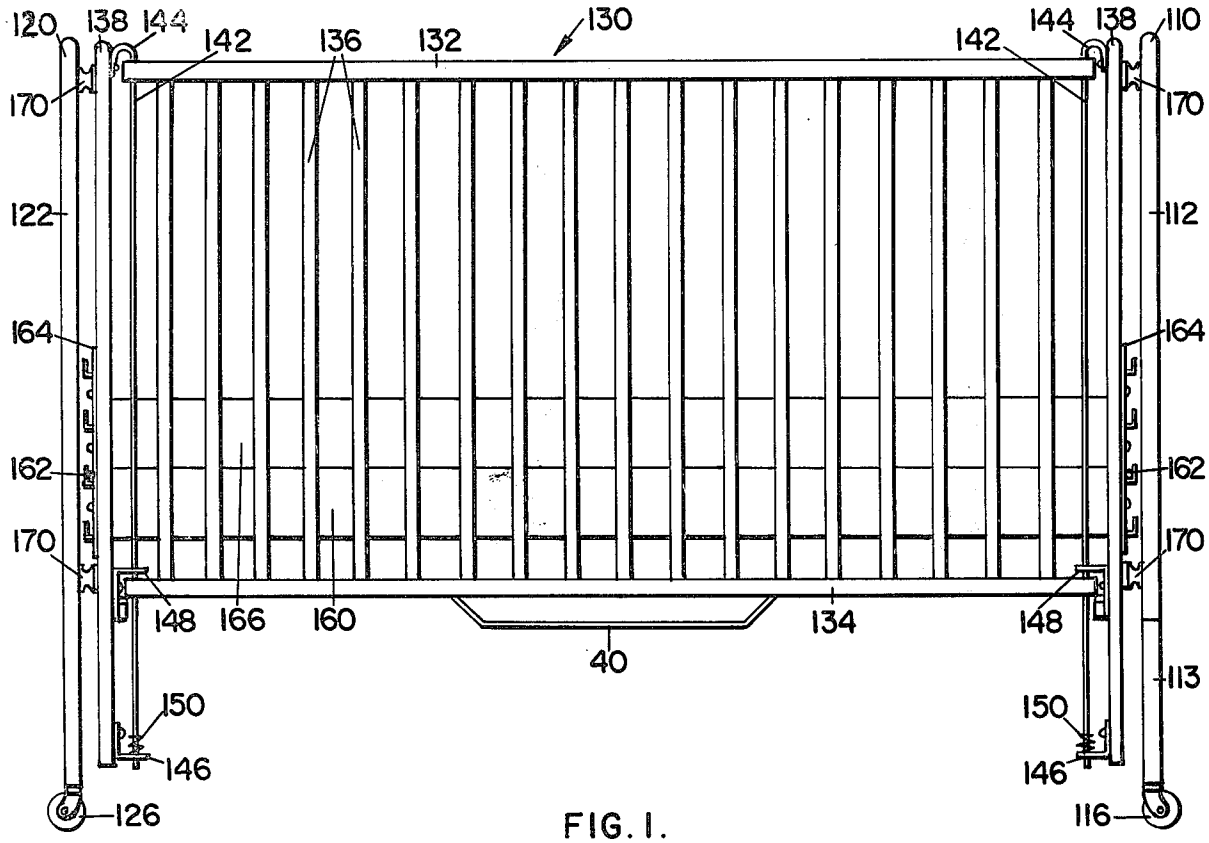

FIG. 1.

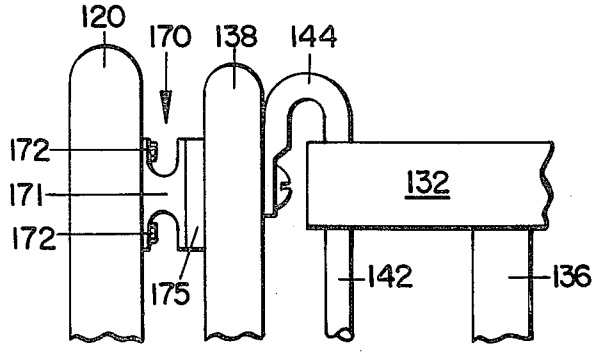

FIG. 2.

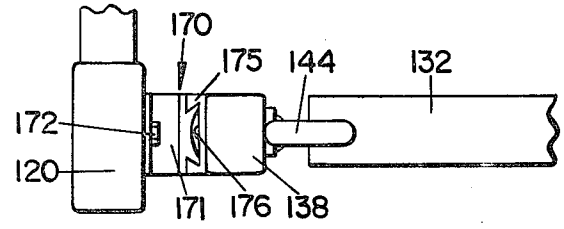

FIG. 3.

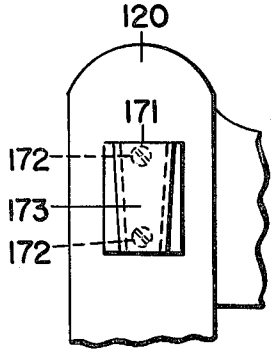

FIG. 4.

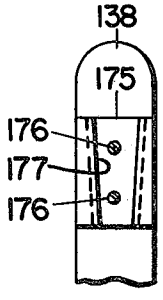

FIG. 5.

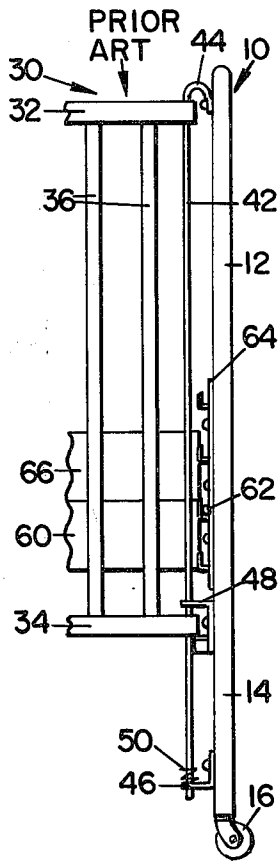

FIG. 6.

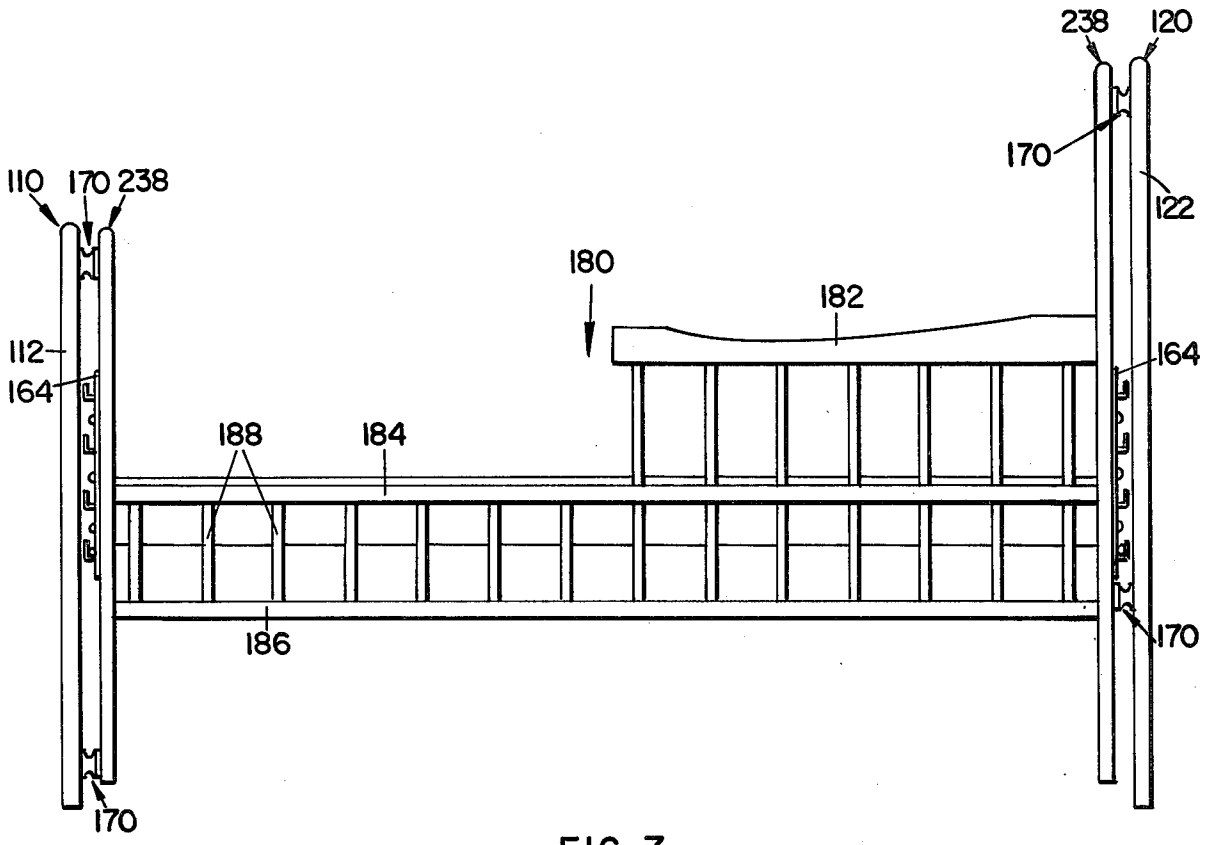
238
120
170
122
110
170
238
180
182
112
164
164
188
184
186
170
170

FIG. 7.

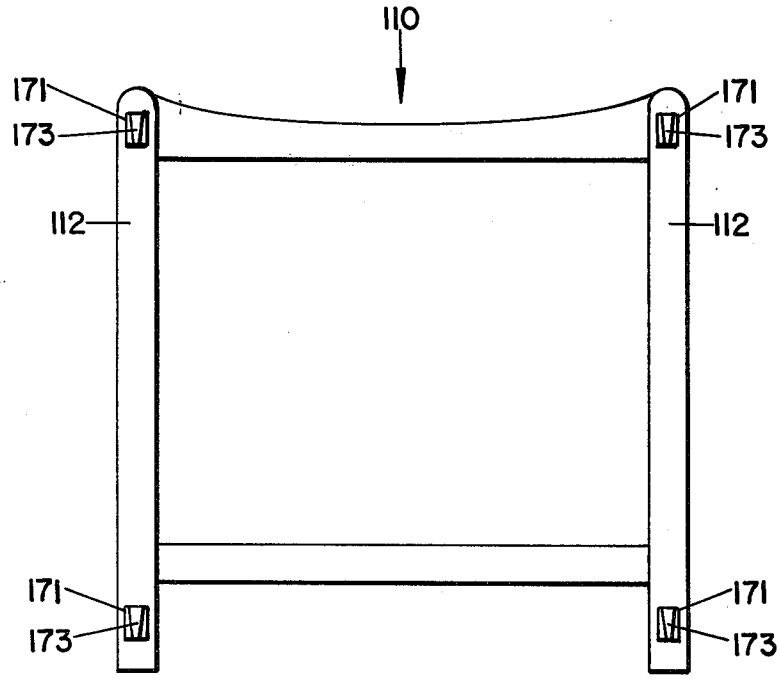
110
171
171
173
173
112
112
171
171
173
173

FIG. 8.

CRIB

This invention relates to bedsteads generally and particularly a bedstead serving as either a crib for an infant and/or a youth bed for a child too old for a crib but yet not old enough for an adult-size bed.

As known, of late it has been customary for a bedstead manufacturer to ship his product in the form of a set of various components or subassemblies complete with a bag of additional parts and hardware plus printed assembly instructions, with the latter being usually so poorly written as to overwhelm the purchaser.

This invention derives from the acknowledged fact that a crib or like bedstead, upon arrival in disassembled form at the home of the ulimate purchaser, presents outlandish problems for the consumer who, by the law of averages, is totally inexperienced in and completely unqualified for the exasperating work represented in any assembly effort.

Herein I provide a method of rapidly assembling such a bedstead. In trial tests involving over 250 different people asked to assemble any of the bedsteads hereof, the average assembly time was 35 seconds.

Additional to a method of assembling a bedstead, I provide herein a structure with respect to the design and configuration of certain of its instrumentalities and their coaction whereby the ready assembly can be rapidly achieved by even the most technically unskilled person.

The basic concept envisions the provision by the manufacturer of an assemblage of such bedstead subassemblies complete with associated hardware strategically fitted thereto to the end that the subassemblies, upon receipt by the purchaser at ulitmate destination, can be readily assembled into a complete bedstead with a minimum of distress and aggravation and with the additional benefits of greater rigidity and improved appearance.

Of course, it follows that the reverse procedure permits ready disassembly by the owner in the event the crib is desirably moved from room to room or house to house.

One other significant purpose of the invention is to provide a crib or bed so structured that it may be taken apart and folded into a convenient compass, as for storage purposes, without the attendant frequent loss of small parts making reassembly difficult if not impossible. And this is not to slight the fact that the entirety of the problem arises ab initio because of the obvious economics of the shipping problem dictating that the product, in movements from manufacturer to wholesaler and/or retailer and thence to consumer, be packaged in disassembled form. In the drawings:

FIG. 1 is a view, in side elevation, of a crib embodying some of the features of the invention;

FIG. 2 is an enlarged fragmentary view, in side elevation, of one of the connectors of the invention;

FIG. 3 is an enlarged fragmentary view, in top plan, of the FIG. 2 components;

FIG. 4 is an enlarged fragmentary view, in front elevation, of a female half part of a connector secured to an end rail of the back or front of a crib;

FIG. 5 is an enlarged fragmentary view, in front elevation, of a male half part of a connector secured to an end rail of a side of a crib;

FIG. 6 is a fragmentary view, in side elevation, showing one end of a side and back or front of a crib of the prior art;

FIG. 7 is a view, in side elevation, showing the FIG. 1 crib converted to a youth bed; and

FIG. 8 is a view, in front elevation, showing the back or operating side of the foot member of the FIG. 7 youth bed.

The invention is based upon two primary desiderata: (1) to enable any ulimate purchaser to fully assemble a bedstead within a matter of seconds and without a multitude of small parts, and (2) to satisfy the esthetic sense by the provision of a crib or youth bed or combination crib-convertible-to-youth-bed which, when assembled, will have a desired appearance, that is with the avoidance of any freakish look due to the presence of additional components.

With reference first to the prior art, the usual crib is comprised of a headboard subassembly, generally indicated by **10**, and made up, as known, of either a solid end panel or a plurality of vertically-disposed rails framed as by suitably spaced horizontally-extended top and bottom cross rails and also by suitably spaced opposite vertically-extended end rails (one of wiich is shown as **12** in FIG. **6**) serving as corner posts and extending downwardly below the plane of the bottom cross rail to define legs **14** which may or may not be equipped with the usual casters **16.**

Similarly, the footboard subassembly at the opposite end is comprised of an end panel or plurality of rails framed by spaced horizontally extended top and bottom cross rails and spaced opposite vertically extended end rails similarly serving as corner posts and extending downwardly below the plane of the bottom cross rail to define legs likewise caster-equipped, if desired.

Further in this prior art recital, we would call attention to the usual side subassemblies extended between the opposite head and footboard subassemblies, on opposite sides of the crib, and herein generally indicated by **30** in FIG. **6.**

Each side subassembly comprises the usual spaced top and bottom horizontally extending cross rails **32** and **34** respectively and spaced vertically extending slats **36** interconnecting therebetween.

One or both side subassembleis may be provided with conventional drop-facilitating means usually but not necessarily in the form of such as a foot-operated gate shoe component with a spring-pressed pivoted latch, all whereby the respective side subassembly may be held in an upper crib-enclosing position or dropped therefrom to a lower crib-non-enclosing position. Such a means is not exemplified in the fragmented prior art showing of FIG. **6,** but is shown in the FIG. **1** representation of the invention where it is indicated by numeral **40.**

With continued reference to FIG. **6,** such dropping is facilitated by means of drip side slide rods **42** associated with each end of each headboard and footboard subassembly. Each such drop side slide rod is offset at its upper end at **44** for detachable securement thereat to the respective end rail as by a screw of bolt and is disposed in spaced parallelism with the respective end rail, there being an apertured lower bracket **46** strategically located relative to and mounted on the respective leg and adapted to receive through its opening the lower free extremity of the respective drop side slide rod. Additionally, the rod is extended through suitable aligned vertical openings in the upper and lower cross rails of the respective side subassembly.

Each end rail **12** is further provided with an upper bracket **48** through which the respective rod is passed and a bumper spring **50** seated on each lower bracket **46** and against which the respective bottom cross rail **34** of the side subassembly will rest when in side subassembly lowered position.

The headboard and footboard subassemblies are spaced as to each other by the usual mattress-supporting spring means **60,** mounted in any practical manner, as for example by an inter-engagement of lugs **62** usually unitary with and projecting outwardly from the spring at opposite ends thereof and vertically-disposed spring means suspension brackets **64** provided on each said end rail **12** and offering a plurality of vertically-spaced selective levels or planes along which the spring means may be disposed.

Spring means **60** upwardly supports the conventional mattress **66.**

So much for the well known prior art construction.

Not so well known with respect to the prior art is that it is normal to package and sell such crib in unassembled form, with the headboard and footboard and subassemblies being packaged each in assembled subassembly form, leaving to the consumer the unhappy task of adding the packaged hardware i.e., drop side slide rods **42,** lower brackets **46,** upper brackets **48,** bumper springs **50,** suspension brackets **64** and requisite screws or bolts in the right places at the right sequence in time of assembly so as to achieve a fullyassembled crib.

In the case of the crib of the invention, the headboard, footboard and sides are factory-assembled as subassemblies.

As shown in FIG. **1,** the headboard subassembly **110** is made up of the end panel (solid member or rails) framed by top and bottom cross rails and opposite end rails **112,** which end rails serve as corner posts and extend downwardly to define legs which preferentially may be equipped with casters.

The footboard subassembly **120** is similarly comprised of a solid end panel or plurality of rails framed as by top and bottom cross rails and opposite end rails **122** serving as corner posts and extending downwardly to define legs **124** which may be equipped with casters **126.**

To the end of avoiding unnecessary duplication of figures in the drawings, in FIG. **1,** end rail **112** is shown as being separate from leg **113,** all for a purpose subsequently to be referred to.

A side subassembly **130,** made up of spaced top and bottom horizontally extending cross rails **132** and **134** respectively and spaced vertically extending slats **136** interconnecting therebetween, is provided on each side of the crib.

The most significant and innovative feature of the invention is now to be described. At each opposite end of each side subassembly, an additional vertically-disposed supplemental end rail **138** is provided and to which a drop side slide rod **142** with an upper offset **144** is secured as by a screw or the like. The drop side slide rod is extendable through suitable aligned vertical openings in the upper and lower cross rails of the respective side subassembly and also through lower and upper brackets **146** and **148** respectively mounted on the supplemental end rail.

A bumper spring **150,** sleeved upon the drop side slide rod, seats on lower bracket **146,** wherefore the side subassembly is cushioned when dropped into lowered position.

The supplemental end rails may mount suspension brackets **164** for receiving lugs **162** extending outwardly from a spring means **160** upon which a mattress **166** may be supported.

The salient point is that all of this so-far-described hardware is mounted on the supplemental end rails at the manufacturing site and incorporated into the side rails subassembly and made a part thereof so that said side rail subassembly is shipped in disassembled form with the other subassemblies to form a package representative of a complete crib ready for quick assembly at ultimate destination.

The quick assembly is further made possible for the provision at each end of each side subassembly of pairs of female (or male) half parts of connectors **170,** the complemental pairs of male (and female) half parts being strategically mounted on the confronting faces of end rails **112** and **122** of headboard or footboard subassemblies **110** and **120** respectively, and the supplemental end rails **138** of side subassemblies **130.**

The male half part of connection **170** is best shown in FIG. **4** as comprising a plate **171** suitable for securement to an end rail or supplemental end rail as being same as **172,** which plate is provided with a forwardly facing vertically extending slip joint **173,** the inside side walls of which are tapered inwardly from top to bottom so as to be complementally receivable in bayonet fashion in a dovetail slot of a female half part.

The female half part of connector **170** is best shown in FIG. **5** as comprising a plate **175** suitable for securement to an end rail or supplemental end rail as by screws **176,** which plate is provided with a forwardly-facing centrallylocated vertically-extending dovetail slot **177** the inside side walls of which are tapered inwardly from top to bottom.

Merely by raising the male-half-part mounting-subassembly relative to the female-half-part-mounting-subassembly, the mating components may be interfitted and the one "sent home" relative to the other with a tight, snug interlock being insured by the mere weight of the subassemblies themselves.

It is to be understood that the invention is not to be considered as limited to the aforedescribed wedge type of locking device. A keyhole slot and stud arrangement or other equivalent locking means may be employed with equal facility.

In the case of a regular crib, it is normal to decorate only the footboard, such decorating representing expense, and because it is not known in advance which side is going to be placed against a wall and/or how the footboard will be advantageously facing forwardly, it is also normal to locate the drop side capability on each of the two sides.

Herein, however, one of the sides can be forward as a stationary side, that is without the employment of drop side slide rods **142,** the cross rails **132** and **134** being secured directly to the supplemental rails at opposite ends. The sides being interchangeable with each other, the stationary side can be located either on the port or starboard side as desired and the movable side being located on the opposite side according to the individual desires of the owner.

Such arrangement offers the additional salient features, first, that the arrangement of stationary side adds rigidity to the crib (the cross rails being secured di-

rectly to the supplemental rails) and, second, that certain of the hardware is eliminated and certain of the decorations are eliminated as well.

It is further to be mentioned that on conventional cribs, there is a clearance between bracket **64** and drop side slide rod **42** sufficient to allow the free passage of lugs **62** from one level to another in the raising or lowering of the spring means and mattress.

Preferentially, in the case of the invention, connecting means **170** is of a special dimension widthwise so as to allow such a spacing between end rail **112** and adjacent supplemental end rail **138** as to permit easy clearance of lugs **162** between bracket **164** and end rail **112** as the spring means and mattress are raised and/or lowered.

A further advantage in mounting the suspension brackets on the supplemental end rails **138** is that the full weight of the occupant child is then thrust upon the sides of the crib thereby adding to the effectiveness of the wedge lock while at the same time achieving a hiding of the hardware behind the wood so as to maintain same hidden from a curious child.

As an additional important feature of the invention, federal government regulations now dictate the parts held together by screws and requiring removal for disassembly purposes must be machine screws with machine grommets, adding appreciably to the basic costs.

In the case of the crib hereof, no nuts or bolts or screws are required to be removed for purposes of disassembly so as to eliminate the need for any machine screws or grommets in the entirety of the construction, therefore allowing use of wood screws with attendant economics.

The invention further envisions a system which includes the provision of a two-part headboard subassembly or of a two-part footboard subassembly, as desired, wherein the upper or the lower of the parts thereof may be removed, to provide a foreshortened footboard of a youth bed, to the end that the child who has outgrown the crib may be readily provided with a youth bed having the appearance of a conventional adult bed incorporating the more acceptable higher headboard and lower footboard subassemblies.

Crib manufacturers conventionally produce a crib incorporating a headboard (normally positioned adjacent a wall) having a "three-fourths panel", so described as a result of having a pair of relatively long supporting legs with a shorter panel, and a footboard (normally positioned inwardly of the said wall) having a "full-length" panel, so described as a result of having a pair of shorter supporting legs and a larger panel. Cribs being normally viewed from the front or foot, the long legs of the headboard are usually not observable. The generally observable effect is one of a bedstead wherein the opposite end panels are seemingly of substantially equal height with the topmost horizontal planes of those end subassemblies and of the interconnecting drop sides on the opposite sides being coplanar.

Preferentially, but not obligatorily, the relatively long legs representing the lower portion of a crib headboard are removable to allow a shorter or lowered end subassembly for adaptation as a footboard of a youth bed. Nonetheless, the invention, in broadest aspects, comprehends the removal of either the upper or lower portions of either a headboard of footboard of a crib, to allow the lowered appearance of a footboard of a youth bed. When so removed, the converted subassembly is seen to incorporate a full-length subassembly. Herein, I envision use of one of the high subassemblies of the crib and modifying it into a low subassembly, thereby to contribute to the esthetic appearance of a youth bed.

Headboard **110** of FIG. **1** is two-part construction in the respect that vertical end rails **112** are each formed of an upper portion **112** and a lower portion **113** which is releasably secured to said upper portion such as by an upwardly projecting pin or rod (not shown) having a lower extremity fitted into a suitable opening in the lower portion and an upper extremity projecting upwardly therefrom and being receivable as by a friction fit in a suitable aligned opening in the upper portion, wherefor the parts may be held together and readily separated from each other as disengagement may be desired.

The now lowered or foreshortened headboard subassembly becomes what will serve as the footboard subassembly of the youth bed shown in FIG. **7**, same being generally indicated at the left hand side of the Figure by the same numeral **110**, numeral **112** indicating the end rail thereof.

At the same moment, the old footboard subassembly **120** now will serve as the headboard subassembly of the FIG. **7** youth bed with end rail **122** thereof carrying the same numerical designation.

The head panel is now seen to be supported by the foreshortened legs.

Spring means **160** is similarly disengaged from its first position on the headboard and is relocated in a second position so that mattress **166**, supported by the spring means, is disposed in a horizontal plane.

The vertical height of the lower part of each vertical side rail will correspond to the vertical height of the lower part of each drop side slide rod so that, in the conversion process, the extent of the foreshortening of both sets of components is the same.

So converted, the bedstead may then be turned around so that the former headboard subassembly now serves as the footboard subassembly of the converted bedstead, as shown in FIG. **7**, all whereby what was formerly a crib now has the appearance and function of a youth bed.

To avoid the need for the customer involving himself with hardware transfers, a new pair of side subassemblies complete with hardware are obtained from the supplier and the crib side subassemblies are disposed of.

The youth bed side subassembly, generally designated by **180** comprises a horizontally extending configured top cross rail **182** defining a high end, a horizontally-extending intermediate cross rail **184** defining a low end and a horizontally extending bottom cross rail **186**, said cross rails being spaced as to each other and interconnected as by vertically spaced slots or spindles **188**, the cross rails being mounted directly on supplemental end rails **238**.

The salient point is that it is the youth bed side subassembly **180** which mounts its own supplemental end rails **238**, each thereof being provided with the corresponding suspension bracket **164** and also half parts of connectors **270**, female half parts if the headboard and footboard subassemblies are provided with male half parts, or vice versa.

The embodiments of the invention in which an exclusive property or privilege is claimed are defined as follows:

1. A knockdown crib/youth bed arrangement made from prefabricated subassemblies in the form of a headboard and footboard and opposite sides slip jointed together in assembly, the subassemblies being formed complete with requisite interconnecting means to the preclusion of loss of such parts by the ultimate consumer, comprising:

a. a pair of spaced end panels each inclusive of a pair of opposite vertically extending end rails,

b. a pair of side panels each inclusive of a pair of supplemental opposite vertically extending end rails,

c. each end rail and respective adjacent supplemental rail being slip jointed with respect to each other,

d. a pair of slide rods on the inboard side of each of the supplemental end rails,

e. one of the end panels being of two-part construction,

f. one of said pair of slide rods being of two-part construction, and

g. one part of the two-part end panel and one part of the two-part slide rods being removable to shorten said end panel and the slide rods of said pair thereof.

2. The convertible crib and youth bed according to claim 1, wherein the spaced end panels constitute a crib headboard and a crib footboard, wherein the end panel of two-part construction is the crib headboard, and wherein the two-parts of said end panel constitute an upper portion and a lower portion, the lower portion of said end panel being removable to convert the end panel to a youth bed footbaord.

3. A convertible crib and youth bed according to claim 2, the upper portion of said end panel being removable to convert the end panel to a youth bed footboard.

4. A convertible crib and youth bed according to claim 1, wherein the spaced end panels constitute a crib headboard and a crib footboard, wherein the end panels of two-part construcion is the crib footboard, and wherein the two parts constitute an upper portion and a lower portion, the lower portion of said end panel being removable to convert the end panel to a youth bed footboard.

5. A convertible crib and youth bed according to claim 4, the upper portion of said end panel being removable to convert the end panel to a youth bed footboard.

6. A knockdown bedstead made from prefabricated subassemblies in the form of a headboard and footboard and opposite sides slip jointed together in assembly, the headboard subassembly comprising a panel with opposite vertically extending end rails, the footboard subassembly comprising a panel with opposite vertically-extending end rails, each of the side subassemblies comprising a panel with opposite vertically-extending supplemental end rails, each end rail and respective adjacent supplemental rail being slip jointed with respect to each other.

7. In the knockdown bedstead of claim 6, including means for converting a crib to a youth bed comprising,

a. a pair of slide rods on the inboard side of each of the supplemental end rails,

b. one of the end subassemblies being of two-part construction;

c. one of said pair of slide rods being of two-part construction; and

d. one part of the two-part end panel and one part of the two-part slide rods being removable to shorten the end panel and the slide rods of the pair thereof.

* * * * *