(12) INTERNATIONAL APPLICATION PUBLISHED UNDER THE PATENT COOPERATION TREATY (PCT)

(19) World Intellectual Property Organization
International Bureau

(43) International Publication Date
14 May 2009 (14.05.2009)

PCT

(10) International Publication Number
WO 2009/059363 A1

(51) International Patent Classification:
B01D 35/02 (2006.01) ***A61M 1/00*** (2006.01)
B01D 29/05 (2006.01) ***B01D 35/28*** (2006.01)
B01D 36/00 (2006.01)

(21) International Application Number:
PCT/AU2008/001643

(22) International Filing Date:
5 November 2008 (05.11.2008)

(25) Filing Language: English

(26) Publication Language: English

(30) Priority Data:
2007906048 5 November 2007 (05.11.2007) AU

(71) Applicant and
(72) Inventor: **HIRST, Lawrence William** [AU/AU]; 41 Annerley Road, South Brisbane, Queensland 4101 (AU).

(74) Agent: **CULLEN & CO.**; Level 26, 239 George Street, Brisbane, Queensland 4000 (AU).

(81) Designated States *(unless otherwise indicated, for every kind of national protection available)*: AE, AG, AL, AM, AO, AT, AU, AZ, BA, BB, BG, BH, BR, BW, BY, BZ, CA, CH, CN, CO, CR, CU, CZ, DE, DK, DM, DO, DZ, EC, EE, EG, ES, FI, GB, GD, GE, GH, GM, GT, HN, HR, HU, ID, IL, IN, IS, JP, KE, KG, KM, KN, KP, KR, KZ, LA, LC, LK, LR, LS, LT, LU, LY, MA, MD, ME, MG, MK, MN, MW, MX, MY, MZ, NA, NG, NI, NO, NZ, OM, PG, PH, PL, PT, RO, RS, RU, SC, SD, SE, SG, SK, SL, SM, ST, SV, SY, TJ, TM, TN, TR, TT, TZ, UA, UG, US, UZ, VC, VN, ZA, ZM, ZW.

(84) Designated States *(unless otherwise indicated, for every kind of regional protection available)*: ARIPO (BW, GH, GM, KE, LS, MW, MZ, NA, SD, SL, SZ, TZ, UG, ZM, ZW), Eurasian (AM, AZ, BY, KG, KZ, MD, RU, TJ, TM), European (AT, BE, BG, CH, CY, CZ, DE, DK, EE, ES, FI, FR, GB, GR, HR, HU, IE, IS, IT, LT, LU, LV, MC, MT, NL, NO, PL, PT, RO, SE, SI, SK, TR), OAPI (BF, BJ, CF, CG, CI, CM, GA, GN, GQ, GW, ML, MR, NE, SN, TD, TG).

Published:
— *with international search report*

(54) **Title:** A METHOD AND APPARATUS FOR RECOVERY OF SUSPENDED BIOLOGICAL MATERIAL

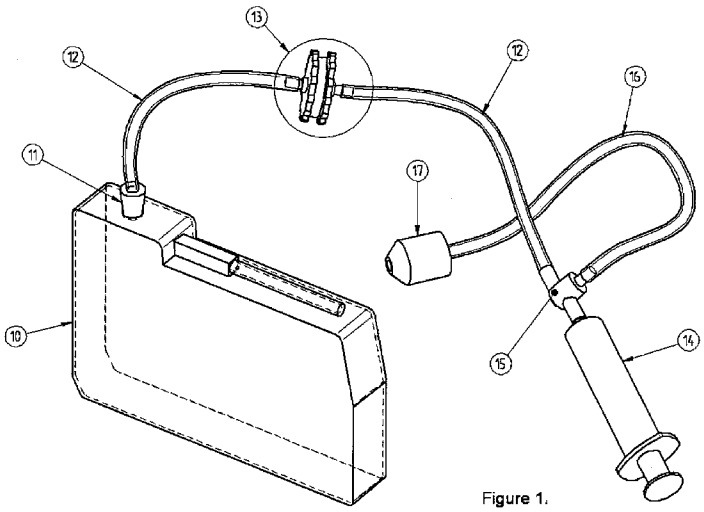

Figure 1.

(57) **Abstract:** An apparatus for recovery of suspended biological material from a suspension solution, the apparatus including a suspension solution container to temporarily hold the suspension solution, extraction means to apply extractive force to the container to extract the suspension solution temporarily held therein and the filter means sized to separate the suspended biological material from the suspension solution.

WO 2009/059363 A1

A METHOD AND APPARATUS FOR RECOVERY OF SUSPENDED BIOLOGICAL MATERIAL

Field of the Invention.

The present invention relates generally to a method of providing a promotional avenue for medical clinics by way of producing a personalized keepsake for their clients.

Background Art.

In an effort to remember significant events in one's life, or in memory of particular persons, it is not uncommon for "keepsake" items to be retained. Various items or practices of this nature are known, such as keeping teeth, locks of hair or other personal effects.

Providers of these keepsake items often embellish the item with names, dates or other information, or provide a surrounding such as a jewellery piece to contain or show off the item.

From the point of view of a specialist business, provision of a keepsake of this kind may be considered a goodwill or promotional tool for a service offering. In the case of baby teeth, for example, a dental practitioner or other provider may actively promote the encapsulation or presentation of a first tooth as a special service, in order to attract business or simply differenciate the services of that outlet by developing goodwill with the client.

The most common uses of human material as keepsakes naturally relate to hard tissues or external items such as hair and teeth. An extension of this, however, is the myriad of soft tissue routinely removed during clinical procedures, some of which may be considered extremely significant in the life of the patient.

In the case of ophthalmic surgery, removal of a cataract can be a life-changing experience and one which can be perceived as bringing a patient "back to life" as sight is restored. Significantly for the primary embodiment of this product, restoring eyesight is extremely emotive for both patient and family / carers.

From the point of the view of the ophthalmic surgery "industry", cataract surgery has become extremely common and is considered routine day surgery, with volumes of procedures and consequently numbers of clinical providers large and increasing. Thus, a commercial pressure exists for clinics to secure more patients than their competitors, by way of clinical conditions or other offerings.

Cataract surgery is commonly conducted via a procedure call phacoemulsification, whereby the patient's clouded lens is broken up and removed via a tube through a small incision in the eye. The lens material is broken into small fragments by ultrasonic pulses and is ejected via suction into a containment cassette located within the operating machine. The cassettes accumulate the lens material and the fluid media used to irrigate the procedure, and the individual patient cassette is normally removed and discarded following the procedure.

The phacoemulsification method has become the standard procedure for routine cataract surgery, and the cassette-type collection of fluid and lens material is common, though the exact configuration of the equipment and performance varies. Importantly, the ability remains, by way of removing a connection or other port, to access the material accumulated within the cassette for most, if not all types of phacoemulsification systems.

It will be clearly understood that, if a prior art publication is referred to herein, this reference does not constitute an admission that the publication forms part of the common general knowledge in the art in Australia or in any other country.

Summary of the Invention.

The present invention is directed to a method and apparatus for recovery of suspended biological material, which may at least partially overcome at least one of the abovementioned disadvantages or provide the consumer with a useful or commercial choice.

With the foregoing in view, the present invention in one form, resides broadly in an apparatus for recovery of suspended biological material from a solution, the apparatus including a suspension solution container to temporarily hold the suspension solution, extraction means to apply extractive force to the container to extract the suspension solution temporarily held therein and the filter means sized to separate the suspended biological material from the suspension solution.

According to a second form, the invention resides in a phacoemulsification separation apparatus for recovery of suspended biological material from a solution formed during phacoemulsification, the apparatus including a suspension solution container to temporarily hold the solution, extraction means to apply extractive force to the container to extract the solution temporarily held therein

and the filter means sized to separate the suspended biological material from the solution.

According to a third form, the invention resides in a method for recovery of suspended biological material from a solution the method including the steps of a temporarily collecting the solution in a solution container, applying extractive force to the container to extract the solution temporarily held therein and filtering the solution through filter means sized to separate the suspended biological material from the solution.

According to a fourth form, the invention resides in a method for creation of a keepsake or memento from biological material recovered following removal during a medical procedure, the method including the steps of collecting the biological material in a solution, temporarily collecting the solution in a solution container, applying extractive force to the container to extract the solution temporarily held therein and filtering the solution through filter means sized to separate the suspended biological material as a filtrate from the solution, removing the filtrate from the filter means into a container, filling of the container with a measured amount of stabilizer fluid, and capping the container to seal the container.

In one form, the invention relates to an apparatus for recovery of a suspended biological material from a solution. Normally, a phacoemulsification procedure results in a collection of the biological material in an irrigation fluid. The fluid and biological material normally collected in a container, commonly known in the art as a cassette. The cassette is normally quite small, approximately the size of B5 stationery and is normally manufactured of a transparent plastic. The cassette has at least one opening in order to accept the collected material and irrigation fluid.

Following the collection of the biological material during the phacoemulsification procedure, the cassette will preferably be removed to a controlled environment away from the patient, for the collection of the biological material. The cassette will preferably be considered as a primary collection vessel.

The present invention includes extraction means. The extraction means is normally provided as a plurality of components and connected to perform the function. According to a particularly preferred embodiment, connection means will normally be provided to connect to the opening of the cassette through which the contents of the cassette can be removed. Normally, substantially all of the contents of

the cassette are removed and the separation of the biological material from the remainder of the solution will be undertaken coincident with the removal from the cassette. Further, the biological material will normally be retained and the irrigation fluid will normally be wasted.

The connection means preferably includes a shaped connector. The shaped connector will normally be provided in the form of a tapered stopper. A particularly preferred form of the tapered stopper is a frustoconical member with a central bore extending through the stopper from a larger circular face to a smaller circular face. Typically, the stopper will be manufactured from a resilient material in order to adapt the stopper to mate with openings of different dimension. The resilient material also typically creates an air/water proof seal between the stopper and the cassette opening.

The degree to which the stopper is tapered and the resilience of the material used may vary. Preferably, the stopper will provide a simple and quick connection which is air/fluid tight and typically will not require special training in order to connect the stopper to the cassette.

The extraction means also preferably includes a fluid conveyance tube. The fluid conveyance tube is preferably attached to the stopper, normally by insertion of at least a portion of the tube into the bore of the stopper. The fluid conveyance tube is also preferably associated with filter means.

Preferably, the filter means is provided in an in-line configuration such that fluid extracted from the cassette must pass through the filter means. A preferred form of filter means is provided in a two-part housing including an upper and lower housing portion with the upper and lower housing portion designated with reference to the flow direction and the lower housing portion being downstream of the upper housing portion.

Typically, each portion of the two-part housing is connectable to the other portion to allow separation. A threaded connection is preferred but is not the only type of connection which may be used. Grip means may be provided on one or both of the housing portions, preferably both.

Each portion of the filter housing will typically be manufactured from a plastic material, preferably a transparent plastic to enable a user to monitor the filtration process.

The filter housing will typically include a filter screen or similar. The filter screen is preferably convex to the flow direction. Normally, the filter screen will be attached peripherally to the lower portion of the filter housing. It is particularly preferred that an upper surface of the filter screen be easily accessible with minimal exposed edges, corners or recesses in which material can be caught during removal which may limit the amount of collected biological material.

The openings in the filter screen will typically sized to separate the biological material particles large enough to be visible to the naked eye. Normally, the phacoemulsification procedure results in material similar in size to fine sand and with a density which is suitably low to enable gentle agitation of the cassette during the removal process to produce a relatively homogenous mixture of the biological particles and irrigation fluid.

Preferably, the filter screen is a stainless steel screen having openings of approximately 0 .4 mm in diameter.

The filter will normally be connected in line with a fluid conveyance tube leading from the stopper to the upper portion and a second fluid conveyance tube leading from the lower portion of the filter for the waste irrigation fluid.

Located downstream of the filter is preferably a waste outlet and also a means to apply extractive force to the cassette and its contents. The extractive force is normally applied through the use or application of a vacuum to the cassette although the cassette may alternatively be emptied by gravity draining for example or other similar process. The preferred means for applying the vacuum is a syringe or similar, preferably of approximately 30 mL in capacity. Other means may be used alternatively such as a plumbed vacuum, Venturi or similar. A common volume of the cassette used in the phacoemulsification procedure is between 50-200 mL and the irrigation liquid is normally a balanced salt solution.

Typically, an in-line check valve or non-return valve is included between the filter and the means for applying extractive force to enable multiple extractions to remove and expel waste irrigation fluid from the cassette. Normally, the waste outlet is provided in the form of a waste tube connected downstream of the check valve or nonreturn valve but prior to the means for applying extractive force. Where a waste tube is provided, the free end of the waste tube may be weighted to ensure the directionality of the expelled stream.

Once the cassette has been emptied (it is typically not necessary to extract all of the biological material of fluid, simply a suitable amount), the biological material will typically accumulate on the filter screen. The filter housing can then be opened to expose the collected material on the screen. The collected material can then be removed, normally scraped from the screen using an appropriate instrument.

An example of an appropriate instrument is a spatula, preferably shaped to enable manipulation of the collected material into a secondary collection vessel.

The preferred form of secondary collection vessel is typically jewellery or a wearable memento. A particularly preferred form is that of a vial with a cap or the closure. The vial is preferably a wearable vial such as a pendant, hearings, cufflinks or other. Whilst this embodiment relates to the collection of relatively small amounts of biological material, the method and apparatus of the present invention may be expanded to incorporate larger volumes of biological material into more substantial secondary collection vessels such as paper weights or other items.

In order to more easily transfer the collected material into the secondary collection vessel, a funnel or similar will normally be provided or used according to the method. In use, the funnel is normally located in all relative to an opening of the secondary collection vessel.

The cap or cover of the secondary collection vessel is preferably permanently attached to the vessel once the biological material (and any other material) has been inserted into the secondary collection vessel. The means or method of fixing the cap to the vessel may be any suitable means including using an engineered tolerance closure or a suitable fast acting adhesive or bonding agent.

Normally, fluid will be added to the secondary collection vessel prior to sealing. Normally the fluid will stabilise the biological material and may also act to disperse the material within the vessel. A preferred form of fluid is an approximately 70% alcohol solution which also has an added benefit of a low vaporisation temperature thereby reducing the amount of residue should any spillage or overflow occur. The fluid may be added by any manner of application to the secondary collection vessel including from a bulk source or from a metered dose applicator such as a syringe, squirt bottle or the like.

In order to maintain the simplicity and safety of the system, the

secondary collection vessel may be temporarily housed or arranged such that handling or correct orientation of the vessel is not required during the transfer of the material. Preferably a handling fixture may be provided which may incorporate a broad base for stability and may be internally configured to align and retain a variety of forms of secondary collection vessel. Typically, the secondary collection vessel will be retained in an upright position by the handling fixture by provision of a corresponding shaped opening in the handling fixture.

The handling fixture is preferably transparent is such that the secondary collection vessel (and other elements) are visible when located in the handling fixture.

A preferred configuration of includes a lower portion to at least temporarily hold the secondary collection vessel. The lower portion also has a receiving opening and a shaped cavity internally configured to align and retain various forms of secondary collection vessel.

At least one upper portion is provided and also includes a shaped receiving opening. The shaped opening in the at least one upper portion is internally configured to align and retain a cap for the secondary collection vessel. Preferably, there will be a pair of interchangeable upper portions, a first upper portion used in conjunction with the lower portion in order to insert material and fluid into the secondary collection vessel and a second upper portion used to cap the secondary collection vessel once the first upper portion has been removed from the lower portion. The upper and lower portions may have corresponding shaped means in order to positively align the upper and lower portions during use.

In summary, the most preferred process following the separation of the biological material includes the steps of:

- Loading of the secondary collection vessel in the form of a pendant body to the handling fixture;
- Application of the first upper portion, including the funnel member;
- Depositing of biological material into pendant body, via the funnel;
- Filling of the pendant body with a measured amount of stabilizer fluid
- Removal of the first upper portion and funnel;
- Fixing of the pendant cap onto the body;
- Removal of the complete pendant; and

- System cleaning and resetting.

The elements described above may be supplied to the clinic facility in kit form, such that re-usable and consumable components may be organized and waste minimized. It is anticipated that the extraction and filter components, plus the orientation fixtures suited to the various jewellery formats are re-usable items, requiring only a general flush and clean between applications or periodically, and the jewelry components, such as a variety or pendant bodies and caps may be supplied in bulk form, for selection according to patient requirements. Enclosure elements (jewelry pieces or otherwise) may be designed to accommodate a modular assembly system, allowing customization of the final presented product. Various accessories for the jewelry item may also be provided, such as necklaces, cufflink findings, clasps, pins or strings.

The product may be provided with a marking or otherwise applied graphic or labeling element which identifies the clinic or practitioner responsible for the procedure and supply. This marking may be applied at component production level, such as embossing on plastic parts, or by a post-applied print or label affixed following assembly of the product.

Importantly, the processing of the lens material, from reclamation from the phacoemulsification cassette to presentation to the patient should be a very rapid process, requiring minimal training and dexterity of the operator. Given that the patient is almost immediately mobile and able to leave the surgery within 15 minutes to half and hour of surgery, the process should preferably allow the keepsake to leave with the patient and should also not overly consume the time of clinic staff.

Alternate methods of lens or other material encapsulation may include incorporation into a rapid-curing resin or other means of capturing and sealing the material. The capture of the material may be designed to maximize the visual impact of the keepsake, by addition of sparkling features or materials that impart flow, motion or other eye-catching or novel features.

Alternately, a high-end application of the concept may include a longer or more involved method of material processing, such as resin impregnation or casting, such that the finished product is not provided immediately and the finished piece may be much more complex, functional or visually spectacular.

Provision of this system, either as an immediate or follow-up patient

service, must be considered within the context of a clinic marketing strategy and must consider the implications of privacy, patient consent and health and safety aspects of the use of human biological material.

Brief Description of the Drawings.

Various embodiments of the invention will be described with reference to the following drawings, in which:

Figure 1 illustrates a preferred embodiment of an extraction kit according to the present invention.

Figure 2 is a perspective illustration of a preferred filter used in the extraction kit illustrated in Figure 1 opened to show the filter screen.

Figure 3 is a perspective view of the filter screen as illustrated in Figure 2 showing the biological material collected on the filter screen.

Figure 4 illustrates a preferred step in the method of collection of the biological material namely using a spatula to remove the material from the filter screen.

Figure 5 is a perspective view of two preferred embodiments of vials and respective caps which may be used in the present invention.

Figure 6 is a perspective view of the vials and caps of Figure 5 in a capped condition.

Figure 7 is a perspective view from the front of a preferred embodiment of handling fixture used according to the present invention.

Figure 8 is a perspective view of the handling fixture illustrated in Figure 7 with a funnel in position.

Figure 9 is a perspective view of the handling fixture illustrated in Figures 7 and 8 showing an upper portion of the handling fixture of the preferred embodiment used to close the vial.

Detailed Description of the Preferred Embodiment.

According to a preferred embodiment, a method and apparatus for creation of a keepsake or memento from biological material recovered following removal during a medical procedure, particularly phacoemulsification, is provided.

The phacoemulsification method has become the standard procedure for routine cataract surgery, and the collection of fluid and lens material removed during the procedure into a collection cassette 10 is common, though the exact

configuration of the equipment and performance varies. Importantly, the ability remains, by way of removing a connection or other port, to access the material accumulated within the cassette 10 for most, if not all types of phacoemulsification systems.

Once the cassette 10 is accessible, the material within (including the irrigation fluid) may be withdrawn in order to selectively retain the lens material. In the preferred embodiment illustrated in Figure 1, this access includes the use of a tapered, resilient stopper 11 which provides a sealed connection to an extraction tube 12 via the appropriate port or opening in the cassette 10. The taper and resilience of the stopper 11 should accommodate various port sizes and or shapes, depending on the phacoemulsification system.

The extracted fluid is entrained via the tube 12 through a filtration component 13 by way of a vacuum or gravity draining. According to the illustrated embodiment, suction to ensure rapid extraction is applied by a large syringe 14. A common volume of material is 50 to 200mL of balanced salt solution, thus, the preferred embodiment includes vacuum extraction by way of a large syringe (30mL) and a suitable check valve 15 enabling multiple pump strokes to alternately suck and expel waste irrigation fluid.

According to the illustrated embodiment, a waste tube 16 is provided with a weight 17 to ensure the waste stream is directed to an appropriate drain.

As illustrated in Figure 2, the preferred filter 13 is provided in two parts with an upper 18 and lower 19 portion (defined by their relative position in the flow path with the lower portion downstream), which are formed or otherwise labeled to indicate the flow direction therein. The portions are easily separable by a user by means of a knurled or grippable edges, in order to access the collected lens material without loss or contamination.

The filter screen 20 located in the filter 13 is sufficiently coarse to only collect particles large enough to be easily visible. It is common for lens particles 21 delivered by phacoemulsification to be sized similarly to fine sand, with a density suitably low to enable the cassette 10 to be agitated gently to produce a relatively homogenous mixture of particles 21 and suspension or irrigation fluid.

The illustrated preferred embodiment incorporating a stainless steel filter screen 20 has apertures approximately 0.4mm diameter, which captures a

suitable amount of material for processing.

The lens particles/material 21 accumulates on the filter screen 20 within the filter 13.

As illustrated in Figure 3, opening of the filter 13 exposes the filter screen 20 such that the lens particles/material 21 which tends to cling to the screen 20 face can be scraped away for collection as illustrated in Figure 4. The filter screen 20 is exposed such that the entire face is accessible and no edges or corners limit the amount of collected material that may be scraped away.

A spatula 22 or other suitable tool may be provided to scrape the filter screen 20. This tool may also be shaped to enable manipulation of the lens material (which retains the consistency of damp brown sugar) into a secondary collection vessel 23.

The secondary collection vessel 23 of the illustrated embodiment takes the form of a piece of jewellery or wearable memento.

The lens particles/material 21 are loaded into the secondary container 23 in a manner that is hygienic and safe for the operator. In the illustrated embodiment, the spatula 22 is configured to be received by a small funnel 24 located partially in the open neck of the secondary collection vessel 23, such that no material is lost in the process.

Figures 5 and 6 illustrate preferred embodiments of the secondary collection vessel 23 in the form of jewellery pieces which as illustrated, take the form of a vial 25 with a cap 26, which, when capped, can be worn or carried as a pendant.

In order to maintain the simplicity and safety of the system, the jewellery pieces, particularly the vials 25 can be housed or arranged such that handling or correct orientation of the small parts is not required.

A preferred configuration of equipment to achieve this is illustrated in Figure 7 in which the vial 25 is retained in an upright position by a handling fixture. The handling fixture illustrated includes an upper 27 and a lower 28 portion, with the lower portion 28 incorporating a broad base 29 for stability. The lower portion 28 also has a receiving opening 30 and shaped cavity (not shown) for a vial 25, internally configured to align and retain various vial forms.

The upper portion 27 also includes a shaped receiving opening 31. The shaped opening 31 in the upper portion 27 is internally configured to align and retain a

cap 26 for the vial 25. Once the vial 25 is correctly located in the lower portion 28 and the lens particles/material 21 loaded, together with appropriate stabilising material, the upper portion 27 is placed on the lower portion 28 and the cap 26 engages the vial 25.

The handling fixture portions 27, 28 of the illustrated embodiment are transparent, such that the vial and other elements are visible.

Upon depositing the lens particles/material 21 into the vial 25, an amount of a fluid to both biologically stabilize and allow the lens particles/material 21 to disperse and drift in the vial 25 is added. A suitable fluid for both these actions is 70% alcohol, which has the added benefit of not leaving a residue should any spillage or overflow occur due to its rapid vaporisation.

The handling fixture may also allow orientation of the cap 26, such that the filling and correct closure process require no contact between reclaimed lens particles/material 21 and the clinic operator.

Fixation of the cap 26 to the vial 25 may be by an engineered tolerance closure, or a suitable fast-acting adhesive or bonding agent.

In summary, the preferred process therefore includes the steps of:

- Loading of the vial to the lower portion of the handling fixture.
- Positioning of an adapter portion 32 to locate the funnel.
- Depositing of lens particles/material 21 into vial, via the funnel.
- Filling of the vial with a measured amount of stabilizer fluid.
- Removal of the adapter portion and funnel.
- Fixation of the cap to the body using the upper portion of the handling fixture.
- Removal of the complete pendant.
- System cleaning and resetting.

In the present specification and claims (if any), the word "comprising" and its derivatives including "comprises" and "comprise" include each of the stated integers but does not exclude the inclusion of one or more further integers.

Reference throughout this specification to “one embodiment” or “an embodiment” means that a particular feature, structure, or characteristic described in connection with the embodiment is included in at least one embodiment of the present invention. Thus, the appearance of the phrases “in one embodiment” or “in an embodiment” in various places throughout this specification are not necessarily all

referring to the same embodiment. Furthermore, the particular features, structures, or characteristics may be combined in any suitable manner in one or more combinations.

Claims

1. An apparatus for recovery of suspended biological material from a suspension solution, the apparatus including a suspension solution container to temporarily hold the suspension solution, extraction means to apply extractive force to the container to extract the suspension solution temporarily held therein and the filter means sized to separate the suspended biological material from the suspension solution.

2. A method for recovery of suspended biological material from a suspension solution, the method including the steps of a temporarily collecting the solution in a solution container, applying extractive force to the container to extract the suspension solution temporarily held therein and filtering the suspension solution through filter means sized to separate the suspended biological material from the suspension solution.

3. A phacoemulsification separation apparatus for recovery of suspended biological material from a solution formed during phacoemulsification, the apparatus including a suspension solution container to temporarily hold the suspension solution, extraction means to apply extractive force to the container to extract the suspension solution temporarily held therein and the filter means sized to separate the suspended biological material from the suspension solution.

4. An apparatus as claimed in claim 1 wherein the suspension solution container includes an opening and the apparatus further includes shaped connection means in the form of a tapered stopper to removeably engageable with the opening.

5. An apparatus as claimed in claim 4 wherein the tapered stopper is a frustoconical member with a central bore extending through the stopper from a larger circular face to a smaller circular face manufactured from a resilient material.

6. An apparatus as claimed in claim 1 further including at least one fluid conveyance tube in fluid communication with the suspension solution container and the extraction means with in-line filter means.

7. An apparatus as claimed in claim 6 wherein the filter means is provided in a two-part housing including an upper and lower housing portion with the lower

housing portion being downstream of the upper housing portion, each portion of the two-part housing connectable to the other portion to allow separation.

8. An apparatus as claimed in claim 7 wherein each portion of the filter housing is manufactured from a transparent material to enable a user to monitor the filtration process.

9. An apparatus as claimed in any one of claims 6-8 wherein the filter means includes a filter screen convex to the flow direction.

10. An apparatus as claimed in claim 7 wherein the filter screen is attached peripherally to the lower portion of the filter housing.

11. An apparatus as claimed in claim 10 wherein an upper surface of the filter screen is easily accessible with minimal exposed edges, corners or recesses in which biological material can be caught during removal.

12. An apparatus as claimed in any one of claims 6-11 wherein the filter means includes filter openings sized to separate biological material particles large enough to be visible to the naked eye.

13. An apparatus as claimed in any one of claims 6-11 wherein the filter means is connected in-line with a first fluid conveyance tube leading from the suspension solution container to an upper portion and a second fluid conveyance tube leading from a lower portion of the filter means for waste irrigation fluid.

14. An apparatus as claimed in any one of claims 6-13 wherein a waste outlet and extraction means are located downstream of the filter means, the extraction means applying extractive force through the use or application of a vacuum.

15. An apparatus as claimed in claim 14 wherein an in-line check valve or non-return valve is included between the filter means and the extraction means to enable multiple extractions to remove and expel waste irrigation fluid from one or more suspension solution containers.

16. An apparatus as claimed in claim 14 or claim 15 wherein a waste outlet connected downstream of the check valve or nonreturn valve but prior to the extraction means.

17. An apparatus as claimed in any one of the preceding claims further including a secondary collection vessel adapted for use as jewellery or a wearable memento, into which the biological material is placed after extraction.

18. An apparatus as claimed in claim 17 further including a handling fixture in which the secondary collection vessel is temporarily housed or arranged such that handling or correct orientation of the vessel is not required during the transfer of the material to the secondary collection vessel.

19. An apparatus as claimed in claim 17 wherein the handling fixture is transparent such that the secondary collection vessel is visible when located in the handling fixture.

20. An apparatus as claimed in claim 18 or claim 19 wherein the handling fixture includes a lower portion and a pair of interchangeable upper portions, a first upper portion used in conjunction with the lower portion in order to insert biological material and fluid into the secondary collection vessel and a second upper portion used to cap the secondary collection vessel once the first upper portion has been removed from the lower portion.

21. A method for creation of a keepsake or memento from biological material recovered following removal during a medical procedure, the method including the steps of collecting the biological material in a suspension solution, temporarily collecting the suspension solution in a suspension solution container, applying extractive force to the container to extract the suspension solution temporarily held therein and filtering the suspension solution through filter means sized to separate the suspended biological material as a filtrate from the suspension solution, removing the filtrate from the filter means into a container, filling of the container with a measured amount of stabilizer fluid, and capping the container to seal the container.

22. A method according to claim 21 wherein substantially all of the contents of the suspension solution container are removed and the separation of the biological material from the remainder of the solution is undertaken coincident with the removal from the suspension solution container.

23. A method according to claim 21 or 22 wherein gentle agitation of the suspension solution container is agitated during the removal process to produce a relatively homogenous mixture of the biological material and irrigation fluid.

24. Once the suspension solution container has been emptied, and the biological material accumulated by the filter means, the filter means can then be

manipulated to expose the collected biological material on the screen for removal to a secondary collection vessel.

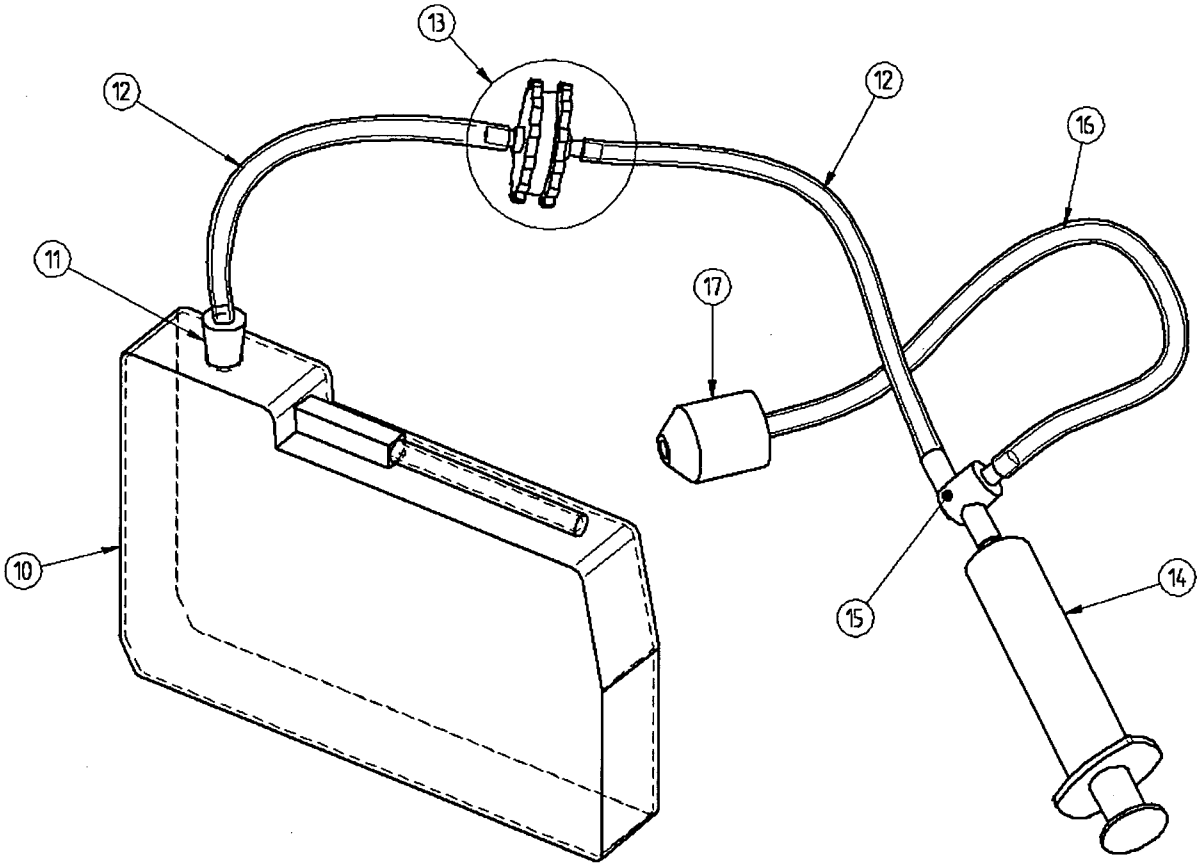

Figure 1.

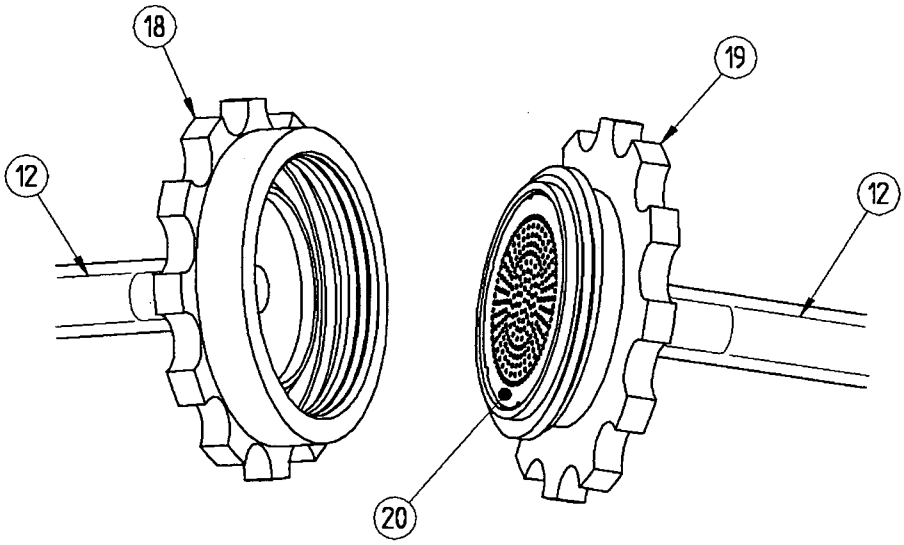

Figure 2.

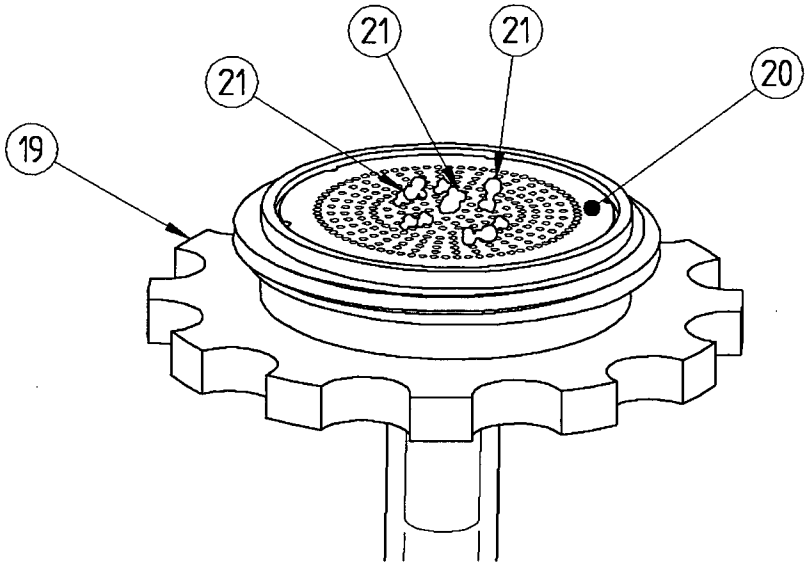

Figure 3.

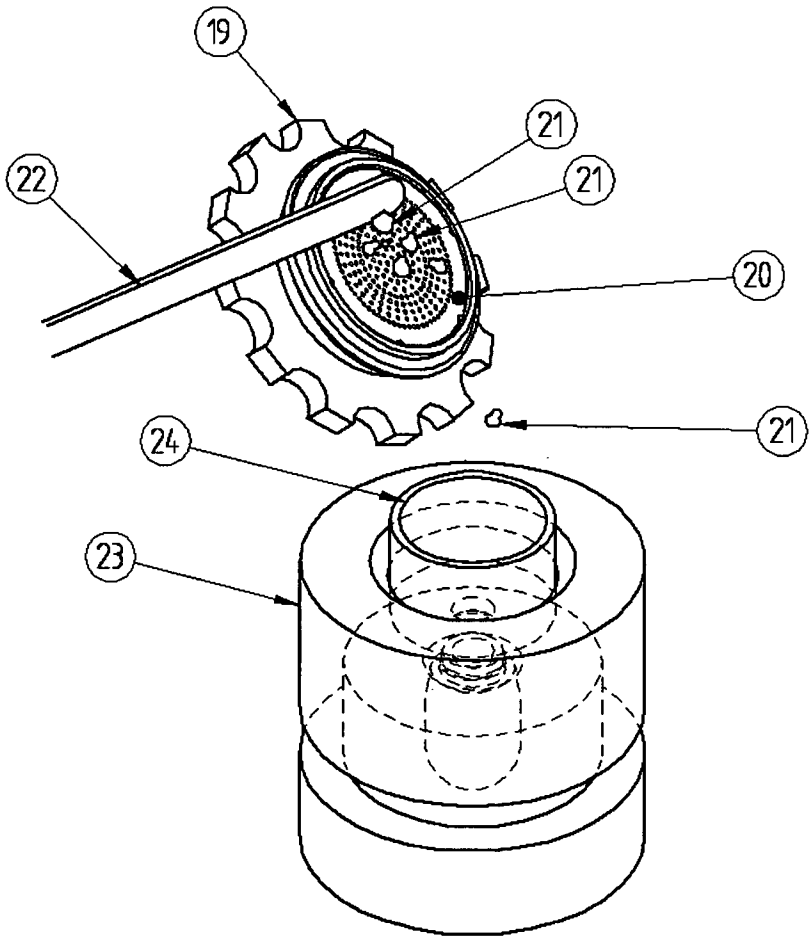

Figure 4.

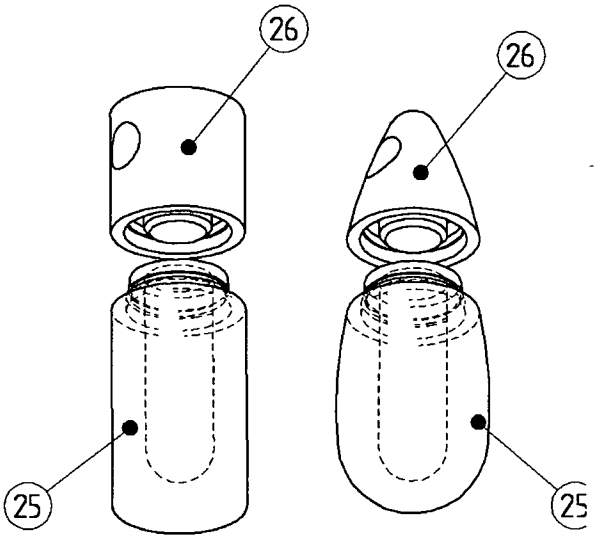

Figure 5.

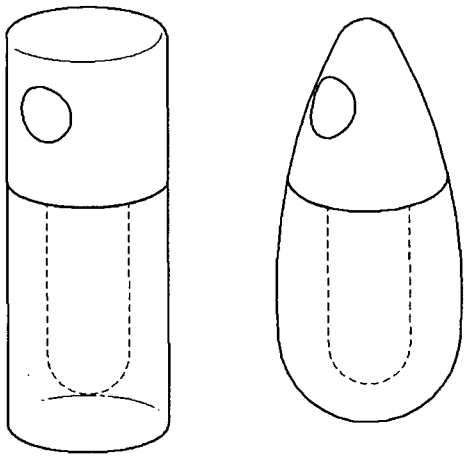

Figure 6.

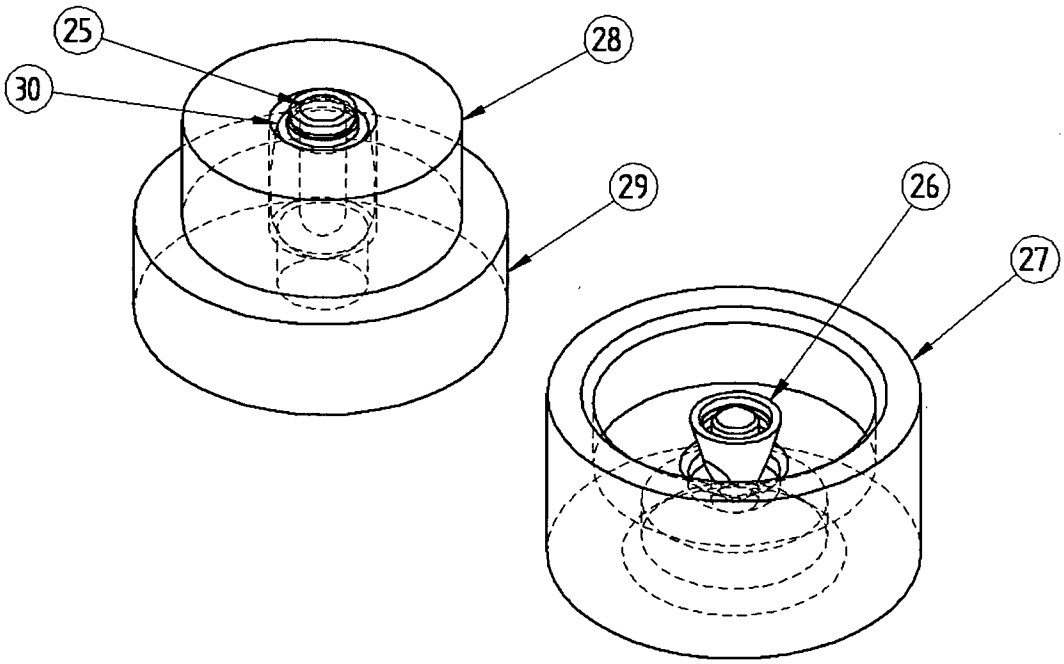

Figure 7.

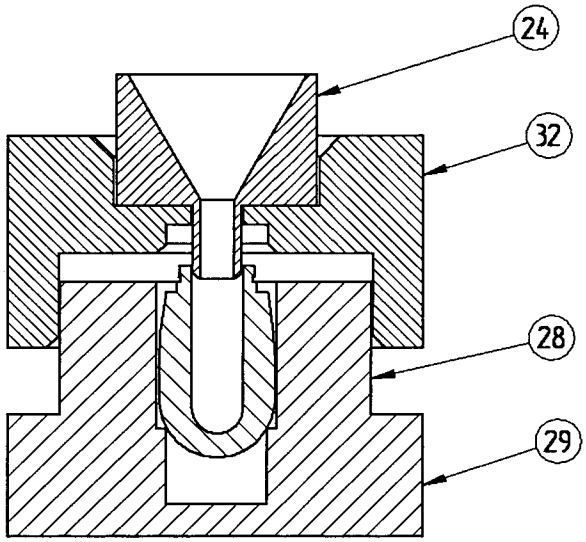

Figure 8.

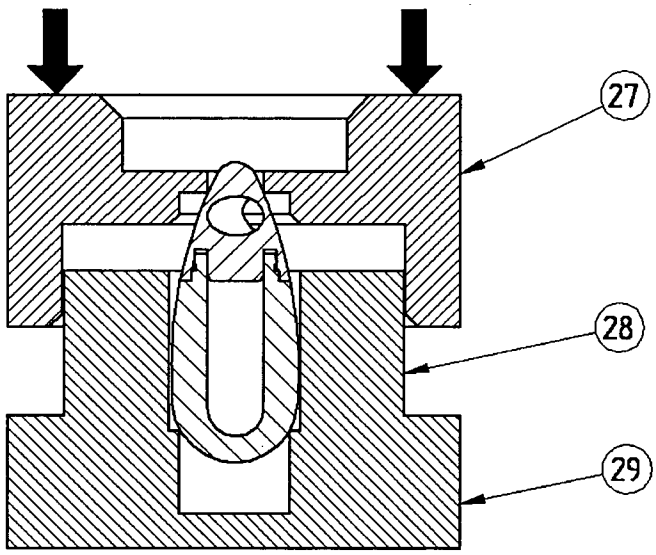

Figure 9.

INTERNATIONAL SEARCH REPORT

International application No.
PCT/AU2008/001643

A. CLASSIFICATION OF SUBJECT MATTER

Int. Cl.

B01D 35/02 (2006.01) ***B01D 29/05*** (2006.01) ***B01D 36/00*** (2006.01)
A61M 1/00 (2006.01) ***B01D 35/28*** (2006.01)

According to International Patent Classification (IPC) or to both national classification and IPC

B. FIELDS SEARCHED

Minimum documentation searched (classification system followed by classification symbols)
IPC B01D29/05, B01D35/02, B01D35/28, B01D36/00, A61M1/00, A45C11/16, A61F9/011

Documentation searched other than minimum documentation to the extent that such documents are included in the fields searched

Electronic data base consulted during the international search (name of data base and, where practicable, search terms used)
EPODOC, WPI, GOOGLE SCHOLAR, GOOGLE PATENT, ESPACE and keywords (biologic+, phaco_emulsif+, eye surgery, vacuum, suction, suck, draw, syringe, extract+, filt+, screen+, separat+, sieve, mesh, recover, collect+)

C. DOCUMENTS CONSIDERED TO BE RELEVANT

Category*	Citation of document, with indication, where appropriate, of the relevant passages	Relevant to claim No.
X	US 6599271 B1 (EASLEY) 29 July 2003 Figures 2 – 7, column 1 line 29 – 31, column 5 line 50 – column 10 line 20	1 – 3, 6 – 12, 14 – 16
X	US 2004/0038425 A1 (FERGUSON ET AL.) 26 February 2004 Figure 1, page 1 paragraph [0001], page 3 paragraph [0043] – page 6 paragraph [0072]	1, 2, 4 – 6, 9, 14
X	US 3731806 A (MCCORMICK) 8 May 1973 Figures 1 – 7, column 1 line 1 – column 8 line 58	1, 2, 6, 12, 14, 15
X	US 2004/0069714 A1 (FERGUSON) 15 April 2004 Figure 2a, 3a, 3b; page 1 paragraphs [0001] – [0002]; page 4 paragraphs [0040] – [0044]	1, 2, 6, 9, 12, 14

☐ Further documents are listed in the continuation of Box C ☒ See patent family annex

* Special categories of cited documents:

"A" document defining the general state of the art which is not considered to be of particular relevance

"E" earlier application or patent but published on or after the international filing date

"L" document which may throw doubts on priority claim(s) or which is cited to establish the publication date of another citation or other special reason (as specified)

"O" document referring to an oral disclosure, use, exhibition or other means

"P" document published prior to the international filing date but later than the priority date claimed

"T" later document published after the international filing date or priority date and not in conflict with the application but cited to understand the principle or theory underlying the invention

"X" document of particular relevance; the claimed invention cannot be considered novel or cannot be considered to involve an inventive step when the document is taken alone

"Y" document of particular relevance; the claimed invention cannot be considered to involve an inventive step when the document is combined with one or more other such documents, such combination being obvious to a person skilled in the art

"&" document member of the same patent family

Date of the actual completion of the international search	Date of mailing of the international search report
19 December 2008	9 - JAN 2009
Name and mailing address of the ISA/AU AUSTRALIAN PATENT OFFICE PO BOX 200, WODEN ACT 2606, AUSTRALIA E-mail address: pct@ipaustralia.gov.au Facsimile No. +61 2 6283 7999	Authorized officer **MILKA WENAS** AUSTRALIAN PATENT OFFICE (ISO 9001 Quality Certified Service) Telephone No : +61 2 6283 2593

INTERNATIONAL SEARCH REPORT

Information on patent family members

International application No.
PCT/AU2008/001643

This Annex lists the known "A" publication level patent family members relating to the patent documents cited in the above-mentioned international search report. The Australian Patent Office is in no way liable for these particulars which are merely given for the purpose of information.

Patent Document Cited in Search Report		Patent Family Member					
US	6599271	NONE					
US	2004038425	AU	2003258419	CA	2495427	EP	1535038
		US	7211225	WO	2004019006		
US	3731806	BE	779993	CA	961776	DE	2209610
		FR	2127835	GB	1376472		
US	2004069714	AU	2003278007	CA	2501660	CN	1720441
		EP	1556677	US	6905594	US	7341669
		US	2005150841	WO	2004034036		

Due to data integration issues this family listing may not include 10 digit Australian applications filed since May 2001.

END OF ANNEX