E. M. SWANSON.

BRUSHING AND POLISHING DEVICE.

APPLICATION FILED DEC. 29, 1911.

1,039,333.

Patented Sept. 24, 1912.

2 SHEETS—SHEET 1.

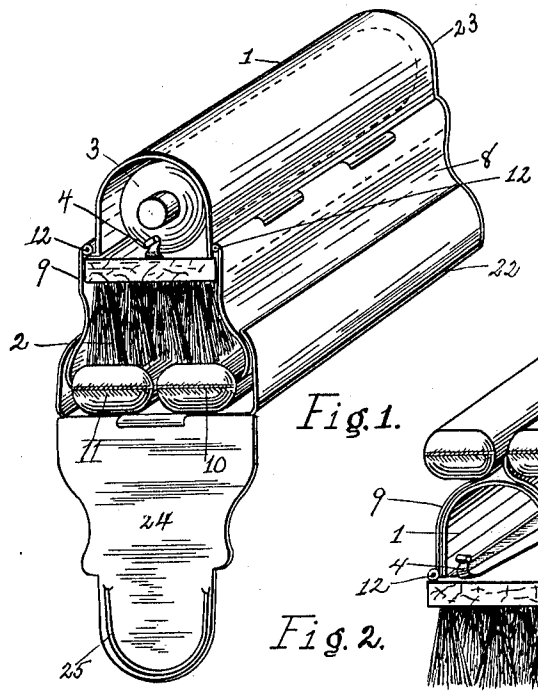

Fig. 1.

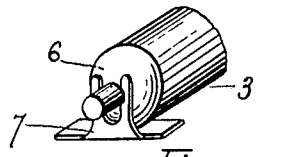

Fig 10.

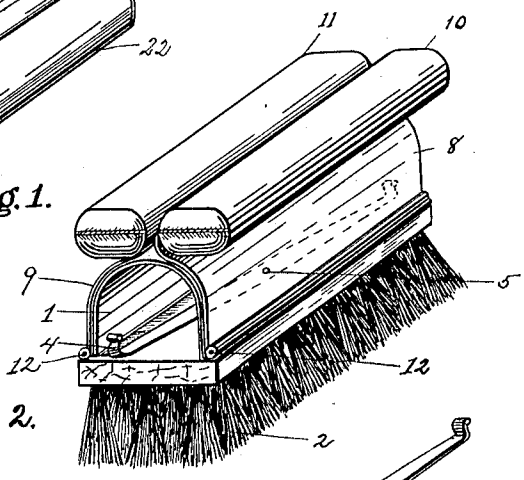

Fig. 2.

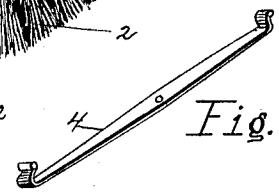

Fig. 9

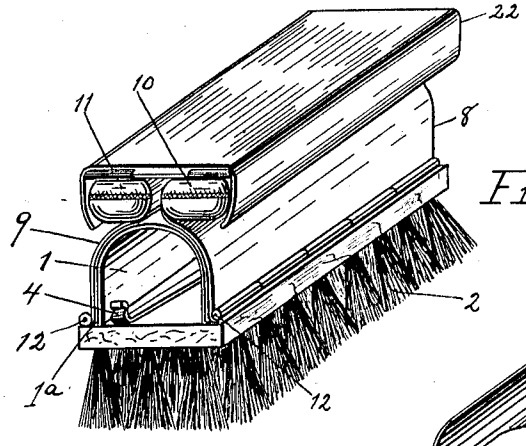

Fig. 3

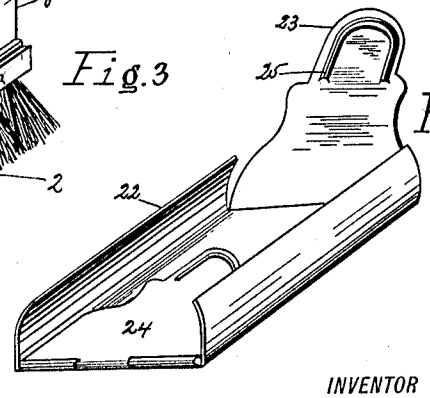

Fig. 4.

WITNESSES:

John C. Sanders

Albert F. Heuman.

INVENTOR

Elizabeth Milton Swanson

BY

Wallace Mills

ATTORNEY

COLUMBIA PLANOGRAPH CO., WASHINGTON, D. C.

E. M. SWANSON.

BRUSHING AND POLISHING DEVICE.

APPLICATION FILED DEC. 29, 1911.

1,039,333.

Patented Sept. 24, 1912.

2 SHEETS—SHEET 2.

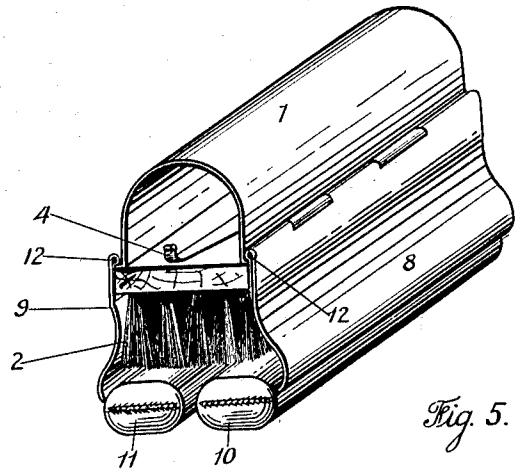

Fig. 5.

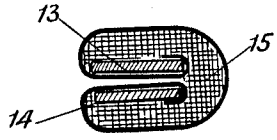

Fig. 6.

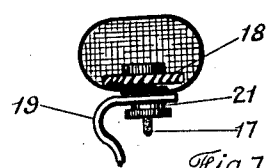

Fig. 7.

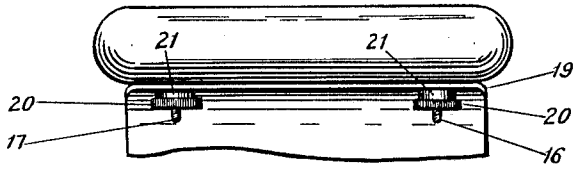

Fig. 8.

WITNESSES:

John C. Sanders

Albert F. Heuman

INVENTOR:

Elizabeth Milton Swanson

BY [signature]

ATT'Y.

COLUMBIA PLANOGRAPH CO., WASHINGTON, D. C.

UNITED STATES PATENT OFFICE.

ELIZABETH MILTON SWANSON, OF MELBOURNE, VICTORIA, AUSTRALIA.

BRUSHING AND POLISHING DEVICE.

1,039,333. Specification of Letters Patent. Patented Sept. 24, 1912.

Application filed December 29, 1911. Serial No. 668,429.

To all whom it may concern:

Be it known that I, ELIZABETH MILTON SWANSON, a subject of the King of Great Britain and Ireland, residing at 352 Collins street, Melbourne, in the State of Victoria, Commonwealth of Australia, have invented new and useful Improvements in Brushing and Polishing Devices, of which the following is a specification.

The object of my present invention is to provide a simple, inexpensive, and compact device for brushing and polishing boots or shoes, harness, or metal articles.

The invention will be better understood from the following description, accompanied by drawings, in which—

Figure 1 is an isometrical view of my device, showing the near end of the brush, a holder containing a collapsible tube of paste polish, a centrally pivoted arm for keeping same in position, two hinged side flaps flanged and provided with detachable polishing pads, and a slidable sheath showing its near hinged end leaf left open for illustrative purposes. Fig. 2 is also an isometrical view of my device, showing it ready for brushing, and without the slidable sheath. Fig. 3 is a similar view to Fig. 2, but shows the slidable sheath employed as a cover for the beforementioned detachable polishing pads. Fig. 4 is also an isometrical view of said slidable sheath, showing one end turned inward, and the other outward. Fig. 5 shows my device ready for polishing, while Fig. 6 is a transverse section of the detachable polishing pads. Figs. 7 and 8 represent an end view and elevation respectively of a modified form of detachable polishing pads, and means for holding same. Fig. 9 is a separate view of the centrally pivoted arm for keeping the collapsible tube in position in the holder, when not in use. Fig. 10 is a view of a modified means for keeping the tube in position.

Like numerals represent like parts in all the views.

Referring to the drawings, it will be seen that my device consists of a tubulous or semi-circular shaped holder (1) provided with two side flanges (1A), Fig. 3, which are rigidly secured to the back of brush (2) by means of countersunk screws (not shown). This holder serves as a housing for the collapsible tube (3) containing the paste polish for use on the boot or surface to be operated upon. In several figures, but more particularly with reference to Fig. 2, is shown the centrally pivoted arm (4) which can be rotated on its pivot (5) situated midlength on the back of brush, and has its ends bent up, so that when said tube (3), after use, is placed in the holder (1), it will be prevented from falling out, and when desired for use, may be withdrawn by placing the arm (4) at an angle as shown at Figs. 2 and 3. In lieu of said pivoted arm I may find it convenient to employ the modification shown at Fig. 10, in which case, the tube (3) may be held in position by first inserting its nozzle in a gullet (6) provided in the bracket (7) suitably secured to the back and near one end of brush, and then screwing on the cap of tube (3) until it bears hard up against said bracket. I wish it to be here understood that I lay no claim whatsoever to the employment of said collapsible tube (3) for holding the paste polish, nor to the use of a holder (1) or housing for same situated upon the back of brush, nor to the use of a slidable sheath, as these are already well known in connection with boot polishing outfits.

Now my present invention consists in providing two hinged side flaps (8) and (9) for the holder and brush, and the provision therewith of the detachable polishing pads (10) and (11) as shown at Figs. 1, 2, 3 and 5. The hinges of each flap comprise knuckles formed thereon, and also upon the two side flanges (1A) of said holder, to operate on pins (12) passed therethrough. The flaps, which are flanged to carry the polishing pads (10) and (11) are also curved or shaped as shown, so that when opened out and turned up they will fit against, and be supported by the holder while the user grips them in order to manipulate the brush. These hinged side flaps (8) and (9) may also be turned down for the pads to meet together, so as to serve as side covers for the brush, and also as a means whereby the device may be gripped for the operation of polishing. A further object in making these hinged side flaps of the design or shape illustrated, is to permit of the slidable sheath hereinafter described being slid over or upon same to serve as a means for covering the pads and closing up the ends of device. These detachable polishing pads (10) and (11), made so as to provide two polishing surfaces, are slipped or mounted upon the

flanged portion of said hinged side flaps, as shown at Figs. 1, 2, 3 and 5, and consist each of a covering, preferably velveteen, two cardboard strips (13) and (14), and wadding (15) or other like soft padding. In making these pads, a section of which is shown at Fig. 6, I have found it most convenient to first sew the two end edges of the velveteen covering to the cardboard, then turn in each side edge and place the rolled up strip of wadding in position upon the cardboard and inner face of said covering. The whole may then be folded together and the ends securely sewn so that the pads will fit tightly on the flanges of said hinged side flaps. This type of polishing pad, having two polishing faces, is reversible, or in lieu thereof I may employ single faced velveteen polishing pads of the kind shown at Figs. 7 and 8 which I fasten on to the flanged portion of the flaps by means of ordinary paper binding screws (16) and (17) passed through two holes provided near the ends of the cardboard strip (18) and the flanged portion (19) of the hinged leaf or flap, and secure thereto by means of a nut (20) having a washer (21) as shown at Figs. 7 and 8, so that these pads also may be detachable for the purpose of recovering, if desired.

The slidable sheath hereinbefore referred to, and represented by the numeral (22), is provided with the hinged end leaves (23) and (24), each of which has an arched rim (25) projected from its inner face to fit into the open ends of holder when the device is to be closed up; or such leaves may be turned inwardly to lie upon the inner face of sheath when used as a cover for the polishing pads while the brush is being employed.

It may be here explained that where the single faced detachable pads shown at Figs. 7 and 8 are to be used, the same form of slidable sheath as shown at Fig. 4 may be employed for covering the pads and closing up the ends of device; but where the slidable sheath with its ends turned inward is used as a cover for the pads only, its side edges would slide in the space situated between the nuts (20) and flanged portion (19) of each hinged side flap.

Where it is intended that my device is to be used for brushing and polishing metal articles, it would only be necessary to dip one end of brush into the liquid or dampened polishing material and apply it to the metal surface and then brush and polish same in the ordinary way.

While the invention is described as applied to the brushing and polishing of boots or shoes and metal articles, I do not limit the scope of my claims to such use, it being obvious that the same device may be employed for a great variety of purposes.

I claim:—

1. In a device of the class described, in combination, a brush, a holder attached to the back thereof, flaps hinged to the holder adjacent the upper edges of the back, said flaps being provided with flanges at their free edges and rotatable on their hinges to position the flanges below said brush or above said holder, and polishing pads carried by said flanges.

2. In a device of the class described, in combination, a brush, a holder attached to the back thereof, flaps hinged to the holder adjacent the upper edges of the back, said flaps being provided with flanges at their free edges and rotatable on their hinges to position the flanges below said brush or above said holder, and reversible polishing pads carried by said flanges.

3. In a device of the class described, in combination, a brush, a holder attached to the back thereof, flaps hinged to the holder adjacent the upper edges of the back, said flaps being provided with flanges at their free edges and rotatable on their hinges to position the flanges below said brush or above said holder, polishing pads carried by said flanges, and a sheath slidingly engaging said flaps for covering said pads when the latter are positioned below or above the brush.

ELIZABETH MILTON SWANSON.

Witnesses:
ALBERT E. S. SWANSON,
CHARLES HARTLETT.

Copies of this patent may be obtained for five cents each, by addressing the "Commissioner of Patents, Washington, D. C."