(12) INTERNATIONAL APPLICATION PUBLISHED UNDER THE PATENT COOPERATION TREATY (PCT)

(19) World Intellectual Property Organization
International Bureau

(43) International Publication Date
07 May 2020 (07.05.2020)

WIPO | PCT

(10) International Publication Number
WO 2020/089305 A1

(51) International Patent Classification:
B60L 58/12 (2019.01) *B60L 3/00* (2019.01)
B60L 58/20 (2019.01) *B60L 50/13* (2019.01)
B60L 1/00 (2006.01)

(21) International Application Number:
PCT/EP2019/079686

(22) International Filing Date:
30 October 2019 (30.10.2019)

(25) Filing Language: English

(26) Publication Language: English

(30) Priority Data:
102018000009968 31 October 2018 (31.10.2018) IT

(71) Applicant: **PIAGGIO & C. S.P.A.** [IT/IT]; Viale Rinaldo Piaggio, 25, I-56025 Pontedera (PI) (IT).

(72) Inventors: **CARMIGNANI, Luca**; c/o PIAGGIO & C. S.p.A., Viale Rinaldo Piaggio, 25, I-56025 Pontedera (PI) (IT). **CANTINI, Jury**; c/o PIAGGIO & C. S.p.A., Viale Rinaldo Piaggio, 25, I-56025 Pontedera (PI) (IT).

(74) Agent: **ZANOLI, Enrico** et al.; Via Melchiorre Gioia, 64, I-20125 Milano (IT).

(81) Designated States *(unless otherwise indicated, for every kind of national protection available)*: AE, AG, AL, AM, AO, AT, AU, AZ, BA, BB, BG, BH, BN, BR, BW, BY, BZ, CA, CH, CL, CN, CO, CR, CU, CZ, DE, DJ, DK, DM, DO, DZ, EC, EE, EG, ES, FI, GB, GD, GE, GH, GM, GT, HN, HR, HU, ID, IL, IN, IR, IS, JO, JP, KE, KG, KH, KN, KP, KR, KW, KZ, LA, LC, LK, LR, LS, LU, LY, MA, MD, ME, MG, MK, MN, MW, MX, MY, MZ, NA, NG, NI, NO, NZ, OM, PA, PE, PG, PH, PL, PT, QA, RO, RS, RU, RW, SA,

(54) Title: DEVICE FOR POWERING AND CONTROLLING AN ELECTRIC VEHICLE

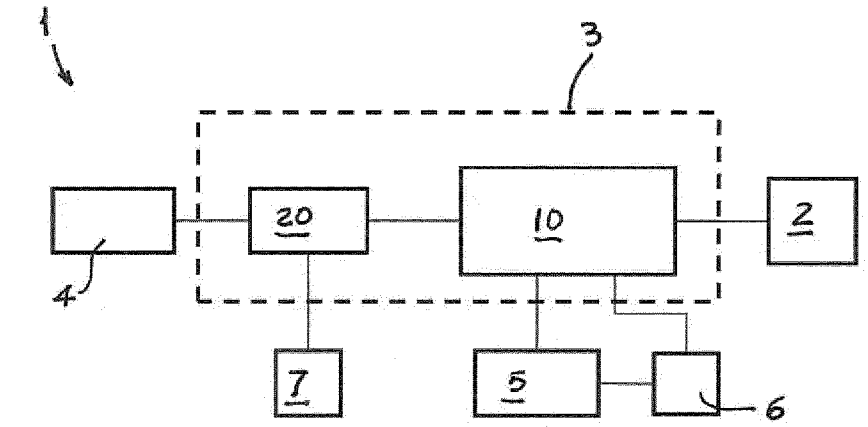

F1g.1

(57) Abstract: A device for powering and controlling an electric vehicle comprising an electric traction motor and a control system of the vehicle and of the electric traction motor, said device comprising a first main battery for powering the electric motor and said control system, a second service battery adapted to power said control system during an ignition phase of said vehicle, first starting means of the vehicle and second emergency starting means of the vehicle. The control system comprises a first control unit of the vehicle and electric traction motor and a second control unit of said first main battery, said first starting means being operatively connected to said second service battery and to said first control unit of the vehicle and electric traction motor to power said first control unit by means of said second service battery in normal conditions, said second emergency starting means being operatively connected to said second control unit to power said first control unit by means of said first main battery under emergency conditions.

WO 2020/089305 A1

[Continued on next page]

SC, SD, SE, SG, SK, SL, SM, ST, SV, SY, TH, TJ, TM, TN, TR, TT, TZ, UA, UG, US, UZ, VC, VN, ZA, ZM, ZW.

(84) **Designated States** *(unless otherwise indicated, for every kind of regional protection available)*: ARIPO (BW, GH, GM, KE, LR, LS, MW, MZ, NA, RW, SD, SL, ST, SZ, TZ, UG, ZM, ZW), Eurasian (AM, AZ, BY, KG, KZ, RU, TJ, TM), European (AL, AT, BE, BG, CH, CY, CZ, DE, DK, EE, ES, FI, FR, GB, GR, HR, HU, IE, IS, IT, LT, LU, LV, MC, MK, MT, NL, NO, PL, PT, RO, RS, SE, SI, SK, SM, TR), OAPI (BF, BJ, CF, CG, CI, CM, GA, GN, GQ, GW, KM, ML, MR, NE, SN, TD, TG).

Declarations under Rule 4.17:

— *of inventorship (Rule 4.17(iv))*

Published:

— *with international search report (Art. 21(3))*

DEVICE FOR POWERING AND CONTROLLING AN ELECTRIC VEHICLE

DESCRIPTION

The present invention concerns a device for powering and controlling an electric vehicle, in particular an electric driven motorcycle, with improved reliability characteristics.

The following description will refer mainly to an electric motorcycle or moped without wishing to limit the field of application. Furthermore, in the following description the terms motorcycle and moped should be considered equivalent.

The use of electric motors is known both in motorcycles of hybrid type, in which one or more internal combustion engines are assisted by one or more electric motors, and in fully electric motorcycles, driven exclusively by the electric motor.

In some typical embodiments of known type, an electric motorcycle advantageously includes a high voltage main battery that provides the energy for driving the electric motor and a low voltage service battery that provides energy to many electric and electronic equipment of the motorcycle. In solutions of this type, a DC-DC converter is furthermore normally provided to convert the high voltage current generated by the main battery into a low voltage current to power the low voltage service battery.

One of the functions performed by the service battery is to provide energy to the system in the starting phase of the motorcycle. In practice, in the starting phase, the user, by means of a switch (typically operated by the vehicle ignition key or push-button), connects the service battery to the VCU (Vehicle Control Unit). The latter, in turn, through a BMS (Battery Management System), activates the main battery, enabling it to drive the traction motor and maintain the service battery charged through the DC-DC converter.

This solution, although it performs the task of managing powering of the electric traction motor and of the various electronic and electric devices of the motorcycle in an optimal manner, nevertheless has some drawbacks. Among these, the drawback that occurs when the service battery is flat or faulty is particularly serious for the user. In this case, in fact, in the absence of the initial energy from the VCU provided by the service battery, the motorcycle cannot be started, even though the high voltage main battery is sufficiently charged.

To solve this problem, different solutions have been proposed. These, however, have various drawbacks due above all to the complexity of the circuits used to guarantee starting of the vehicle and/or to the systems proposed not being fully reliable.

It would therefore be desirable to have an electric vehicle, and in particular an electric motorcycle, with improved characteristics, able to overcome the problems of the vehicles of known type deriving from the impossibility of starting the vehicle in conditions in which the

service battery is not sufficiently charged for the purpose.

One object of the present invention is therefore to provide a device for powering and controlling an electric vehicle, and in particular an electric motorcycle, which makes it possible to start the vehicle also when the service battery is not sufficiently charged.

A further object is to make it possible to start the vehicle also when the service battery is not sufficiently charged and, once the vehicle has been started, to allow recharging of the service battery.

A further object of the present invention is to provide a device for powering and controlling an electric vehicle which is provided with emergency starting means in the event of the service battery not being sufficiently charged to allow starting of the vehicle.

A further object of the present invention is to provide a device for powering and controlling an electric vehicle which can be manufactured with relatively simple circuit means.

A further object of the present invention is to provide a device for powering and controlling an electric vehicle which is easy to manufacture at competitive costs.

The above-mentioned and further objects and advantages of the present invention, as will be illustrated in the following part of the description, are achieved by means of a device for powering and controlling an electric vehicle which comprises an electric traction motor and a control system of the vehicle and of the electric traction motor. Said device comprises a first main battery for powering the electric traction motor and said control system, a second service battery adapted to power said control system during a starting phase of said vehicle, first starting means of the vehicle and second emergency starting means of the vehicle. The vehicle according to the present invention is characterized in that said control system comprises a first control unit of the vehicle and of the electric traction motor and a second control unit of said first main battery; said first starting means are operatively connected to said second service battery and to said first control unit of the vehicle and the electric traction motor to power said first control unit by means of said second service battery in normal conditions; said second emergency starting means are operatively connected to said second control unit to power said first control unit by means of said first main battery in emergency starting conditions.

In a further aspect, the present invention also concerns an electric vehicle, in particular an electric moped, comprising a device of the type described and claimed.

In this way, as better explained below, by means of the second emergency starting means it is possible to activate the second control unit, in practice consisting of a control unit (BMS) of the first main battery, in such a way as to allow powering of the first control unit, comprising

a vehicle control unit (VCU), by means of the first main battery when the second service battery is not sufficiently charged, and therefore enable starting of the vehicle.

For the purposes of the present invention, by the term *"emergency starting conditions"* it is meant conditions in which the second service battery is not provided with sufficient charge to allow starting of the vehicle.

Furthermore, with the term *"battery"* it is meant any electrical energy storage device which can be recharged and is able to supply electrical energy to a circuit connected to it.

The term *"electric vehicle"* wants to indicate any vehicle provided with at least one electric traction motor, therefore comprising vehicles with fully electric traction and vehicles with hybrid traction.

Lastly, for the purpose of the present invention, the term *"electric traction motor"* wants to indicate an *"electric motor"* which provides driving torque to a driven wheel of the vehicle.

In a typical embodiment of a device for powering and controlling an electric vehicle according to the present invention, the first starting means comprise a first starting switch and said second emergency starting means comprise a second emergency starting switch, positioned on an emergency circuit.

Normally said first and second switch can be operated by a user and can typically consist of an ignition key or ignition push button and an emergency starting push button respectively.

In further detail, in an embodiment according to the present invention, the device for powering and controlling an electric vehicle can advantageously comprise third switching means which are controlled by said second control unit of said first main battery and which are adapted to connect said first main battery to the first control unit of the vehicle and the electric traction motor; furthermore, the device for powering and controlling can advantageously comprise fourth switching means which are controlled by said first control unit of the vehicle and the electric traction motor and operatively connected to said second control unit of said first main battery and are adapted to send to said second control unit a signal for activation/deactivation of said third switching means.

In practice, the third switching means can consist of a switch (main switch), controlled by the control unit (BMS) of the main battery, which allows the power supply of the control system of the vehicle and the electric traction motor to be electrically connected to the voltage of the first main battery. In turn the fourth switching means can consist of a further switch (ignition switch) controlled by the vehicle control unit (VCU), the closing of which is detected by the BMS which consequently activates closing of the main switch.

In normal conditions, therefore, the VCU can be activated by the ignition key and determines

closing of the ignition switch. The BMS detects the closing of the latter and activates the main switch, causing closure of the power supply circuit of the control system of the vehicle and the electric traction motor by means of the main battery.

In an embodiment of the device for powering and controlling an electric vehicle, according to the present invention, the second emergency starting switch is adapted to send to said second control unit of said first main battery a signal for the activation/deactivation of said third switching means.

In practice, in emergency starting conditions, the user, by means of a push button for example, operates the second emergency starting switch, causing it to close. The BMS then detects closure of the latter and activates the main switch, causing closure of the circuit powering the vehicle and motor control system by means of the main battery.

In an embodiment of a device for powering and controlling an electric vehicle, according to the present invention, said third switching means can advantageously comprise an internal switch of said first main battery, thus simplifying the circuit arrangement.

Typically said first main battery and said second service battery operate at different voltage levels and normally the first main battery operates at a higher voltage level than the second service battery. Typical operating values, for example, can be 48 V for the first main battery and 12 V for the second service battery.

In this case, said first control unit of said vehicle and said electric traction motor advantageously comprises voltage converter means interposed between said first main battery and said second service battery.

In a particularly advantageous embodiment of a device for powering and controlling an electric vehicle, according to the present invention, the first control unit of the vehicle and the electric traction motor preferably comprises first control means of the electric motor (MCU), comprising the control and power electronics of the electric traction motor, and second control means of the vehicle, comprising the vehicle control electronics.

In practice, in this embodiment, the first control means of the electric traction motor are operatively connected to the first main battery and to the electric traction motor for driving said electric traction motor.

Furthermore, the second vehicle control means (VCU) are operatively connected to said second service battery to start the vehicle in normal conditions and are operatively connected to said first main battery for starting the vehicle in emergency conditions. In other words, the VCU, as explained better in the following detailed description, in the starting phase in normal conditions can be advantageously powered by the second service battery, while in the starting

phase in emergency conditions, it can be powered by the first main battery.

In a further aspect, the present invention also concerns an electric/hybrid traction vehicle that comprises a powering and control device as described and claimed.

In particular, the vehicle of the present invention can advantageously consist of an electric moped. In this case, the emergency switch can be advantageously operated by a user via push-button means positioned for example in an under-saddle compartment of the moped.

Further characteristics and advantages of the present invention will become clear from the description of some embodiments, illustrated by way of non-limiting example in the attached Figures, in which:

- Figure 1 is a scheme of a general embodiment of a device for powering and controlling an electric vehicle, according to the present invention;
- Figure 2 is a scheme of a first particular embodiment of a device for powering and controlling an electric vehicle, according to the present invention;
- Figure 3 is a scheme of a second particular embodiment of a device for powering and controlling an electric vehicle, according to the present invention;
- Figure 4 is a scheme of a third particular embodiment of a device for powering and controlling an electric vehicle, according to the present invention;
- Figure 5 is a scheme of a fourth particular embodiment of a device for powering and controlling an electric vehicle, according to the present invention;
- Figure 6 is a scheme of a fifth particular embodiment of a device for powering and controlling an electric vehicle, according to the present invention.

With reference to the attached figures, in its more general embodiment, the device 1 of the present invention is adapted to powering and controlling an electric vehicle comprising an electric traction motor 2 and a control system 3 of the vehicle and the electric traction motor 2. The electric traction motor 2 provides driving torque to a driven wheel of the vehicle.

The device 1 comprises a first main battery 4 which is adapted to power the electric traction motor 2 and the control system 3, in addition to a second service battery 5 which is adapted to power the control system 3 during an ignition phase of the vehicle.

The device 1 further comprises first starting means 6 of the vehicle, consisting for example of a first switch 6 which can be operated by the user by means of an ignition key or ignition push button and second emergency starting means 7 of the vehicle, consisting for example of a second switch 7 that can be operated by the user by means of an emergency starting push button and positioned on an emergency circuit 71.

One of the peculiar characteristics of the device 1 according to the present invention is given

by the fact that said control system 3 comprises a first control unit 10 of the vehicle and of the electric traction motor 2 and a second control unit 20 of the first main battery 4.

In physical terms, the first control unit 10 of the vehicle and the second control unit 20 of the first main battery 4 can be integrated in the same control system 3 (Figure 1). Alternatively, the second control unit 20 can be advantageously integrated in physical terms in a control system 31 of the first main battery 4 (Figures 2-6). In turn, the control system 3 of the vehicle and the electric traction motor 2, and the control system 31 of the first main battery 4 can be physically integrated, totally or partially (Figures 2, 4 and 5), or physically separated (Figures 3 and 6).

Another of the peculiar features of the device 1 according to the present invention is given by the fact that the first starting switch 6 is operatively connected to said second service battery 5 and to said first control unit 10 of the vehicle and the electric traction motor 2, in such a way that when it is closed (ignition key set to ON), the first control unit 10 is powered by means of the second service battery 5 to allow starting of the vehicle.

As better explained below, the second emergency starting switch 7 is operatively connected to the second control unit 20 in such a way to allow powering of the first control unit 10 by means of the first main battery 4 under emergency conditions, namely when the second service battery 5 does not have sufficient charge to permit starting of the vehicle.

With reference to figures 4-6, in a preferred embodiment the device 1 for powering and controlling an electric vehicle comprises third switching means 21 which are controlled by the second control unit 20 of the first main battery 4 and are adapted to connect said first main battery 4 to the first control unit 10 of the vehicle and the electric traction motor 2.

The device 1 further comprises fourth switching means 11 which are controlled by the first control unit 10 of the vehicle and the electric traction motor 2 and which are operatively connected to said second control unit 20 of said first main battery 4. As better explained below, the fourth switching means 11 are adapted to send to the second control unit 20 a signal for the activation/deactivation of said third switching means 21.

In one embodiment of the device of the present invention, the third switching means 21 consist of a switch 21 (main switch) which is controlled by the BMS 20 of the main battery 4, and allows to connect electrically the power supply of the control system 3 of the vehicle and of the electric traction motor 2 to the voltage of the first main battery 4. In turn, the fourth switching means 11 consist of a further switch 11 (ignition switch) which is controlled by the vehicle control unit (VCU) so that when its closure is detected by the BMS 20, the latter consequently activates closing of the main switch 21, thus starting the vehicle under normal

conditions.

Under emergency starting conditions, on the other hand, the second emergency starting switch 7 is adapted to send to said second control unit 20 of said first main battery 4 a signal for the activation/deactivation of said third switching means 21. The user then, by means of a push button for example, acts on the second emergency starting switch 7, causing it to close. The BMS 20 then detects closing of the emergency circuit 71 and activates the main switch 21 causing closure of the powering circuit of the control system 3 of the vehicle and of the electric traction motor 2 by means of the main battery 4.

In practical terms, the main switch 21 can advantageously consist of an internal switch of said first main battery 4.

As previously mentioned, in the device 1 for powering and controlling an electric vehicle according to the invention, the main traction battery 4 and the second service battery 5 operate at different voltage levels, for example at voltages of 48 V and 12 V respectively.

With reference to Figures 5 and 6, in an embodiment of the device 1 of the invention, the first control unit 10 of the vehicle and the electric traction motor 2 comprises voltage converter means 12 (in practice, a DC-DC converter) which are interposed between said first main battery 4 and said second service battery 5.

In this way it is possible to produce an operative interface between the two batteries 4 and 5 thus permitting, among other things, recharging of the service battery 5 by means of the main battery 4.

Again with reference to Figures 5 and 6, in an embodiment of the device 1 of the invention, said first control unit 10 of the vehicle and the electric traction motor 2 comprises first control means 13 of the electric motor (typically a Motor Control Unit - MCU) and second control means 14 of the vehicle (Vehicle Control Unit - VCU).

Typically, the MCU 13 of the electric traction motor 2 is operatively connected to the first main battery 4 and to said electric traction motor 2 so as to allow the driving of said electric traction motor 2.

Furthermore, the VCU 14 of the vehicle is typically operatively connected to said second service battery 5 for starting the vehicle in normal conditions and is operatively connected to said first main battery 4 to allow starting of the vehicle under emergency conditions.

In practice, during normal operation the vehicle starting procedure is the following.

The user operates the first starting means 6, for example by setting the key switch to the ON position. The VCU 14 is then powered by the service battery 5 and gives the command for closing the ignition switch 11 of the main battery 4 intended mainly for traction.

The BMS 20 detects closing of the ignition contact 11 and activates the main switch 21, connecting the power supply of the control system 3 of the vehicle and of the electric traction motor 2 to the main battery 4. Once powered, the control system 3 of the vehicle and of the electric traction motor 2 is able to maintain the charge of the service battery 5 by means of the DC-DC converter 12 and drive the electric traction motor 2 by means of the MCU 13.

If the service battery 5 is flat, it is not possible to power the VCU 14 and proceed with the standard ignition procedure; the emergency starting procedure must be employed by means of the emergency starting switch 7. The emergency starting procedure is the following.

The user operates the first starting means 6, for example by setting the key switch to the ON position. Since the service battery 5 is flat, the VCU 14 cannot be powered and cannot give the command for closing the ignition switch 11 of the main traction battery 4.

At this point the user operates the emergency starting switch 7 (for example by means of a push button) closing the emergency circuit 71. The BMS 20 detects closing of the emergency circuit 71 and activates the main switch 21 connecting the power supply of the control system 3 of the vehicle and of the electric traction motor 2 to the main battery 4.

The control system 3 of the vehicle and of the electric traction motor 2, once powered, is able to power the VCU 14 and recharge the service battery 5 by means of the DC-DC converter 12. The VCU 14 can then command closing of the ignition switch 11 of the main battery 4.

At this point the user can release the push button activating the emergency starting switch 7.

At this point, the vehicle has been started and is in the normal operating mode, with the control system 3 of the vehicle and the electric traction motor 2 continuing to charge the service battery 5 by means of the DC-DC converter 12 and at the same time can begin driving the electric traction motor 2 by means of the MCU 13.

It has been seen in practice that a device for powering and controlling an electric vehicle, and in particular an electric motorcycle, according to the present invention achieves the predefined objects.

Using the powering and controlling device of the present invention, it is in fact possible to start the vehicle also when the service battery is not sufficiently charged.

Furthermore, once the vehicle has been started, the powering and controlling device of the present invention allows recharging of the service battery.

As has been seen from the previous description and attached figures, the powering and controlling device of the present invention can be produced with relatively simple circuit means.

Furthermore, if the vehicle consists of an electric traction motorcycle, the powering and

controlling device of the invention can expediently comprise a push-button operation system positioned close to the main battery and housed in a protected compartment in such a way as not to be freely accessible, other than by the owner/user, for example in an under-saddle compartment of said motorcycle.

Based on the description provided, other characteristics, modifications or improvements are possible and evident to a person skilled in the art. Said characteristics, modifications and improvements should therefore be considered part of the invention. In practice, any materials, in addition to contingent dimensions and shapes, may be used according to requirements and the state of the art.

CLAIMS

1. A device (1) for powering and controlling an electric vehicle comprising an electric traction motor (2) and a control system (3) of the vehicle and of said electric traction motor (2), said device (1) comprising a first main battery (4)) for supplying said electric traction motor (2) and said control system (3), a second service battery (5) which is adapted to supply said control system (3) during a starting phase of said vehicle, first vehicle starting means (6) and second vehicle emergency starting means (7), characterized in that said control system (3) comprises a first control unit (10) of the vehicle and of the said electric traction motor (2) and a second control unit (20) of said first main battery (4), said first starting means (6) being operatively connected to said second service battery (5) and said first control unit (10) of the vehicle and said electric traction motor (2) to supply said first control unit (10) through said second service battery (5) under normal conditions, said second emergency starting means (7) being operatively connected to said second control unit (20) to supply said first control unit (10) through said first main battery (4) in emergency starting conditions.
2. The device (1) for powering and controlling an electric vehicle, according to claim 1, characterized in that said first starting means (6) comprise a first starting switch and said second emergency starting means (7) comprise a second emergency starting switch.
3. The device (1) for powering and controlling an electric vehicle, according to claim 1 or 2, characterized in that it comprises third switching means (21) controlled by said second control unit (20) of said first main battery (4) and adapted to connect said first main battery (4) to the first control unit (10) of the vehicle and of the electric traction motor (2), and fourth switching means (11) controlled by said first control unit (10) of the vehicle and of the electric traction motor (2) and operatively connected to said second control unit (20) of said first main battery (4) and adapted to send to said second control unit (20) a signal for the activation/deactivation of said third switching means (21).
4. The device (1) for powering and controlling an electric vehicle, according to claim 3, characterized in that said second emergency starting switch (7) is adapted to send to said second control unit (20) of said first main battery (4) a signal for activating/ deactivating said third switching means (21).
5. The device (1) for powering and controlling an electric vehicle, according to claim 3 or 4, characterized in that said third switching means (21) comprise an internal switch of said first main battery (4).

6. The device (1) for powering and controlling an electric vehicle, according to one or more of the previous claims, characterized in that said first main battery (4) and said second service battery (5) operate at different voltage levels.
7. The device (1) for powering and controlling an electric vehicle, according to claim 6, characterized in that said first control unit (10) of the vehicle and of said electric traction motor (2) comprises voltage converter means (12) interposed between said first main battery (4) and said second service battery (5).
8. The device (1) for powering and controlling an electric vehicle, according to one or more of the preceding claims, characterized in that said first control unit (10) of the vehicle and of the electric traction motor (2) comprises first control means (13) of said traction electric motor (2) and second control means (14) of the vehicle.
9. The device (1) for powering and controlling an electric vehicle, according to claim 8, characterized in that said first control means (13) of said electric traction motor (2) are operatively connected to said first main battery (4) and to said motor electric (2) for driving said electric traction motor (2).
10. The device (1) for powering and controlling an electric vehicle, according to claim 8 or 9, characterized in that said second control means (14) of the vehicle are operatively connected to said second service battery (5) for starting the vehicle under normal conditions and operationally connected to said first main battery (4) for starting the vehicle under emergency conditions.
11. The device (1) for powering and controlling an electric vehicle, according to one or more of the previous claims, characterized in that said first starting switch (6) and said second starting switch (7) are operated by a user.
12. The device (1) for powering and controlling an electric vehicle, according to anyone of the claims 2 to 11, characterized in that said second switch (7) can be actuated by push-button means.
13. Electric / hybrid traction vehicle characterized in that it comprises a power and control device (1) according to one or more of the previous claims .
14. Electric motorbike, characterized in that it comprises a power and control device (1) according to one or more of the claims 1-12.
15. Motorbike according to claim 14, characterized in that it comprises a power and control device (1) according to claim 11 or 12, said second emergency starting switch (7) being positioned in a under-saddle compartment of said motorbike.

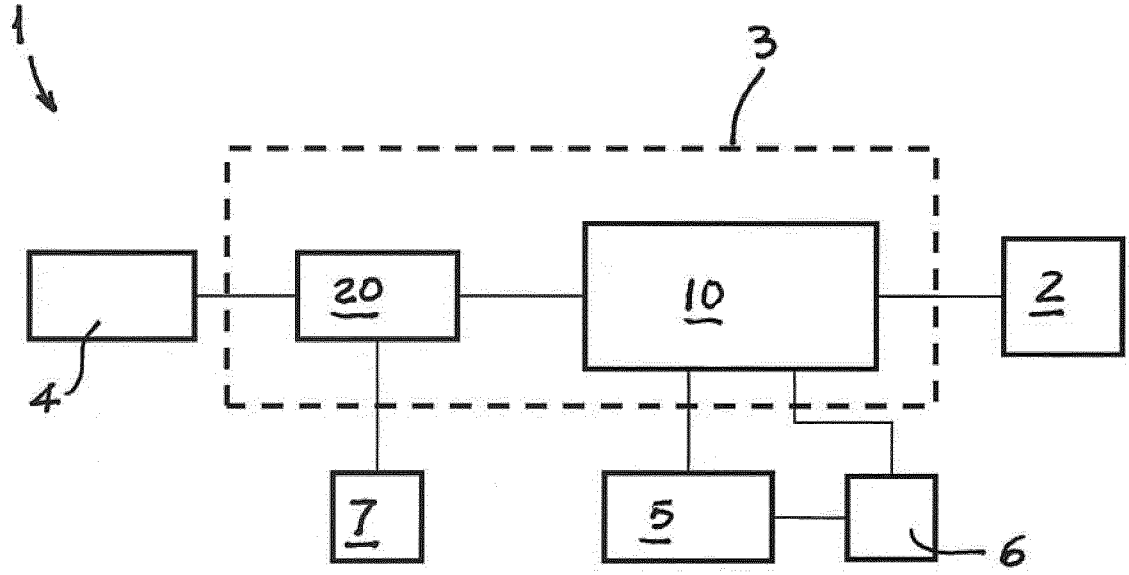

Fig.1

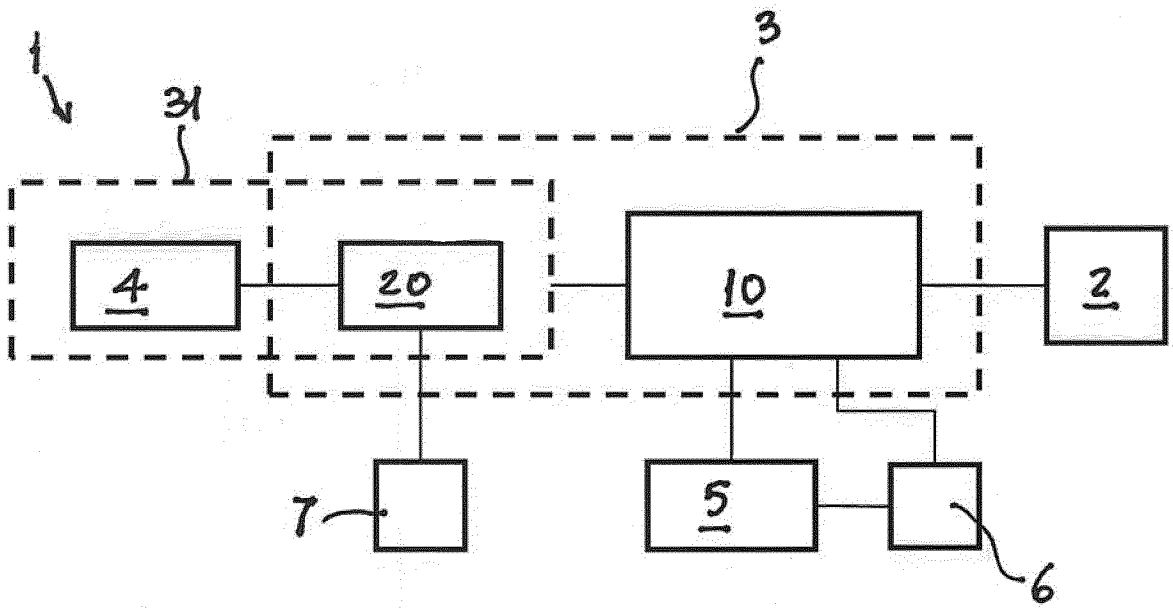

Fig.2

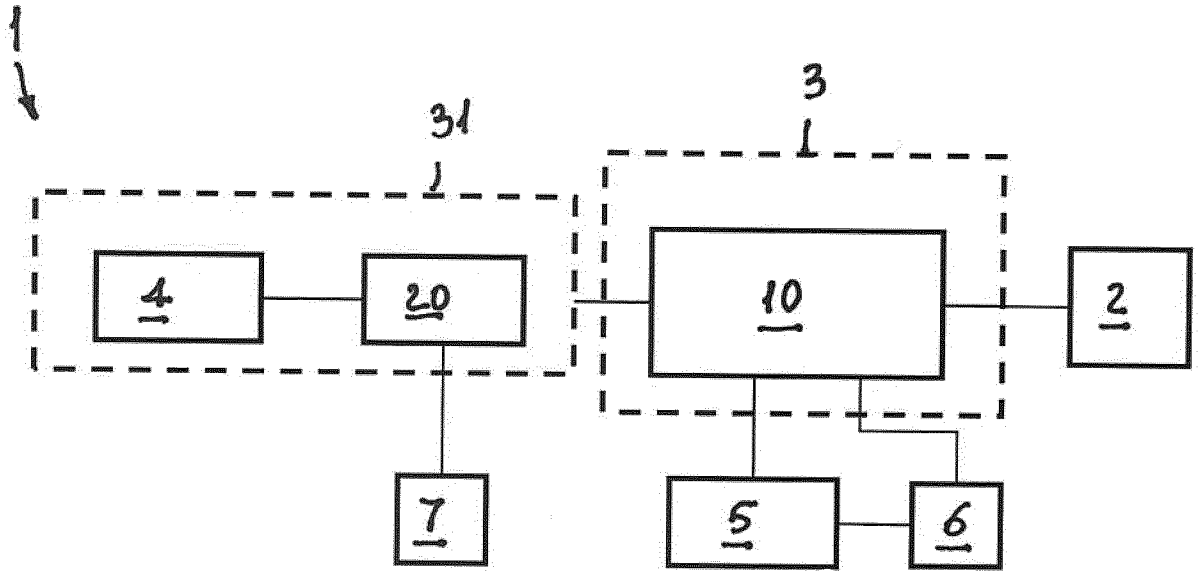

Fig.3

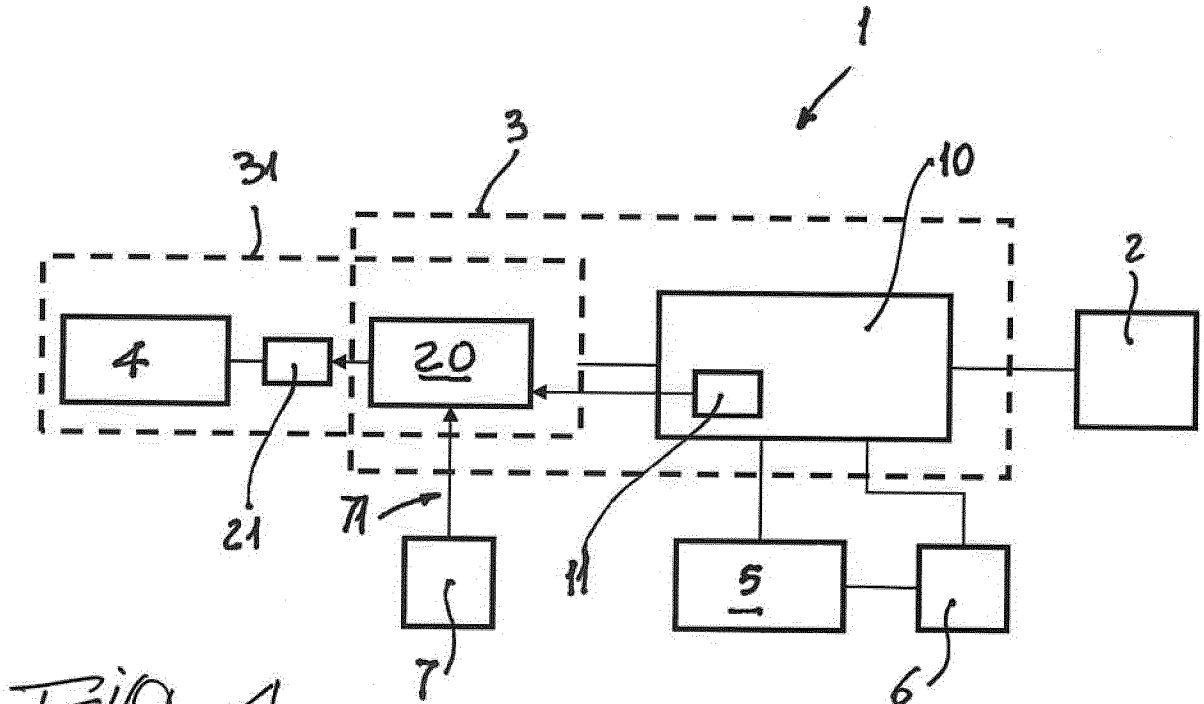

Fig.4

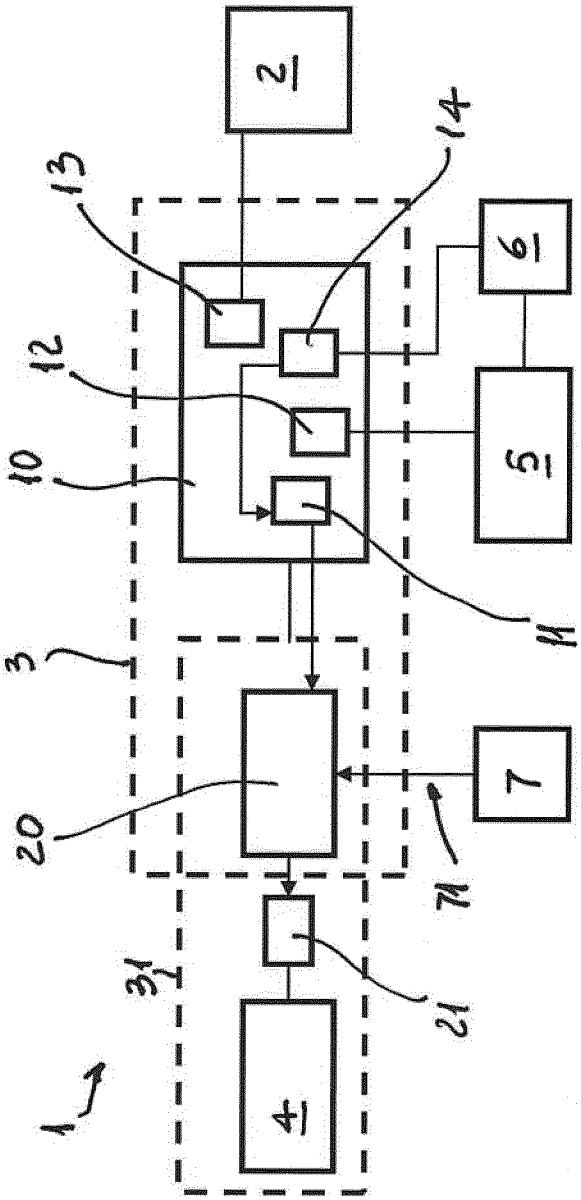

Fig 5

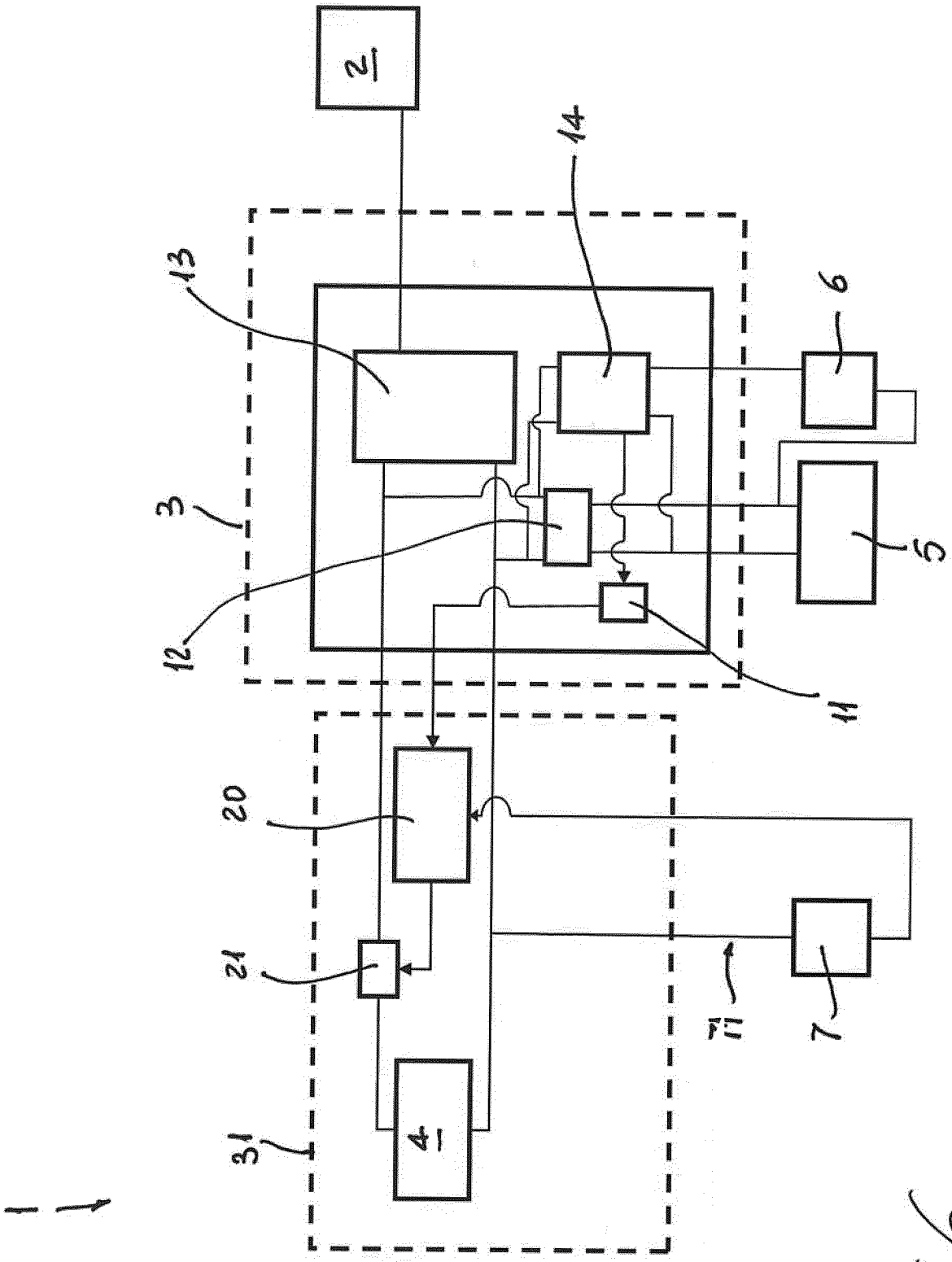

Fig. 1

INTERNATIONAL SEARCH REPORT

International application No
PCT/EP2019/079686

A. CLASSIFICATION OF SUBJECT MATTER
INV. B60L58/12 B60L58/20 B60L1/00 B60L3/00 B60L50/13
ADD.

According to International Patent Classification (IPC) or to both national classification and IPC

B. FIELDS SEARCHED

Minimum documentation searched (classification system followed by classification symbols)
B60L

Documentation searched other than minimum documentation to the extent that such documents are included in the fields searched

Electronic data base consulted during the international search (name of data base and, where practicable, search terms used)
EPO-Internal, WPI Data

C. DOCUMENTS CONSIDERED TO BE RELEVANT

Category*	Citation of document, with indication, where appropriate, of the relevant passages	Relevant to claim No.
Y	EP 1 595 748 A1 (DENSO CORP [JP]) 16 November 2005 (2005-11-16) abstract; claims 1-70; figures 1-29 column 20 - column 48	1-15
Y	DE 10 2007 052750 A1 (BOSCH GMBH ROBERT [DE]) 7 May 2009 (2009-05-07) abstract; claims 1-10; figures 1,2 page 5 - page 9	1-15
A	EP 3 006 244 A1 (NISSAN MOTOR [JP]) 13 April 2016 (2016-04-13) abstract; claims 1-8; figures 1-5 column 3 - column 19	1-15
A	WO 2014/025069 A1 (DENSO CORP [JP]; SUZUKI MOTOR CORP [JP]) 13 February 2014 (2014-02-13) the whole document	1-15

☐ Further documents are listed in the continuation of Box C.

☒ See patent family annex.

* Special categories of cited documents :

"A" document defining the general state of the art which is not considered to be of particular relevance

"E" earlier application or patent but published on or after the international filing date

"L" document which may throw doubts on priority claim(s) or which is cited to establish the publication date of another citation or other special reason (as specified)

"O" document referring to an oral disclosure, use, exhibition or other means

"P" document published prior to the international filing date but later than the priority date claimed

"T" later document published after the international filing date or priority date and not in conflict with the application but cited to understand the principle or theory underlying the invention

"X" document of particular relevance; the claimed invention cannot be considered novel or cannot be considered to involve an inventive step when the document is taken alone

"Y" document of particular relevance; the claimed invention cannot be considered to involve an inventive step when the document is combined with one or more other such documents, such combination being obvious to a person skilled in the art

"&" document member of the same patent family

Date of the actual completion of the international search	Date of mailing of the international search report
13 January 2020	23/01/2020

Name and mailing address of the ISA/	Authorized officer
European Patent Office, P.B. 5818 Patentlaan 2 NL - 2280 HV Rijswijk Tel. (+31-70) 340-2040, Fax: (+31-70) 340-3016	Koutsorodis, Dafni

1

INTERNATIONAL SEARCH REPORT

Information on patent family members

International application No
PCT/EP2019/079686

Patent document cited in search report	Publication date	Patent family member(s)	Publication date
EP 1595748 A1	16-11-2005	EP 1595748 A1	16-11-2005
		EP 2154028 A2	17-02-2010
		US 2006097577 A1	11-05-2006
		WO 2004071814 A1	26-08-2004
DE 102007052750 A1	07-05-2009	DE 102007052750 A1	07-05-2009
		EP 2225135 A2	08-09-2010
		WO 2009059852 A2	14-05-2009
EP 3006244 A1	13-04-2016	CN 105283335 A	27-01-2016
		EP 3006244 A1	13-04-2016
		JP WO2014196242 A1	23-02-2017
		US 2016089981 A1	31-03-2016
		WO 2014196242 A1	11-12-2014
WO 2014025069 A1	13-02-2014	CN 104604085 A	06-05-2015
		DE 112013004005 T5	07-05-2015
		JP 5889750 B2	22-03-2016
		JP 2014036557 A	24-02-2014
		WO 2014025069 A1	13-02-2014