United States Patent

Brown et al.

[15] **3,640,279**

[45] **Feb. 8, 1972**

[54] SKIN GRAFT CUTTING METHOD AND MACHINE

[72] Inventors: Warren F. Brown, Deceased, Atlanta, Ga.; Margery Joy Brown; The First National Bank of Atlanta, Executors

[22] Filed: **Dec. 7, 1967**

[21] Appl. No.: **688,866**

[52] **U.S. Cl.** **128/305**, 83/342, 83/678

[51] **Int. Cl.** **A61b 17/322**

[58] **Field of Search** 128/305, 305.5; 83/678, 342–346

[56] **References Cited**

UNITED STATES PATENTS

1,842,534	1/1932	Brill	128/305.5 UX
2,249,664	7/1941	Morton et al.	83/342 X
3,086,416	4/1963	Minarik	83/678 X
3,472,228	10/1969	Tanner, Jr.	128/305
671,915	4/1901	Curtis	128/305.5 UX
1,482,776	2/1924	Abraham	83/343 X
3,076,461	2/1963	Meek et al.	128/305
3,076,462	2/1963	Meek et al.	128/305
3,358,688	12/1967	Tanner, Jr.	128/305

Primary Examiner—Richard C. Pinkham
Assistant Examiner—Richard J. Apley
Attorney—Patrick F. Henry

[57] **ABSTRACT**

Preparing a skin graft by removing a section of skin, splitting it along a plurality of equally spaced, closely associated lines, and interrupting each cut at intervals, then stretching the skin forming openings each bounded by four sides in a netlike, substantially flat graft. A machine for preparing a skin graft comprising a first roller of metal or the like having a plurality of equally spaced, cutting edges extending along the length of the roller and each being a circular, thin cutting edge having the plane thereof perpendicular to the centerline of the roller; and the second, plastic roller having grooves formed uniformly therein in spaced relation along the length thereof and the plane of the bottom of the groove being at an angle to the centerline of the roller at an angle to the cutting edge of the other roller so that when a skin graft is passed therebetween the skin is cut in a series of closely spaced, uniformly slit lines having solid portions at intervals where the cutting edge drops into the groove in the roller, thereby preparing the skin graft to be stretched in a netlike formation.

10 Claims, 10 Drawing Figures

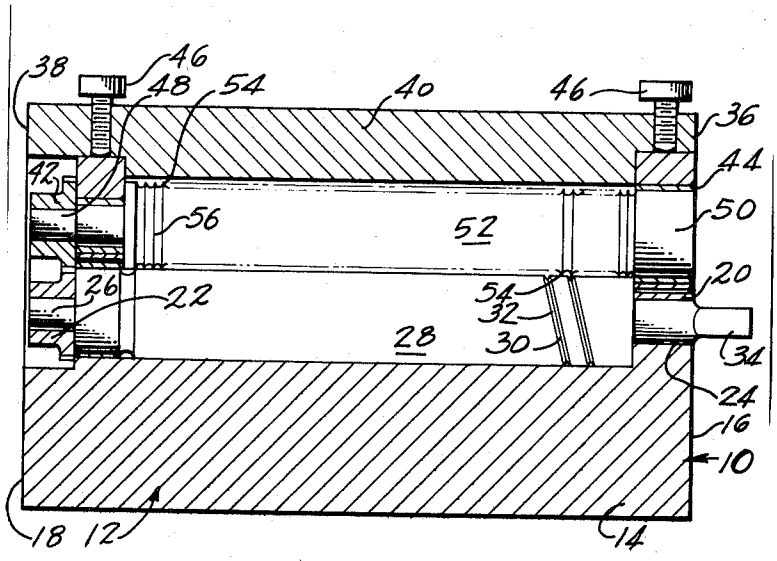

PATENTED FEB 8 1972

3,640,279

SHEET 1 OF 3

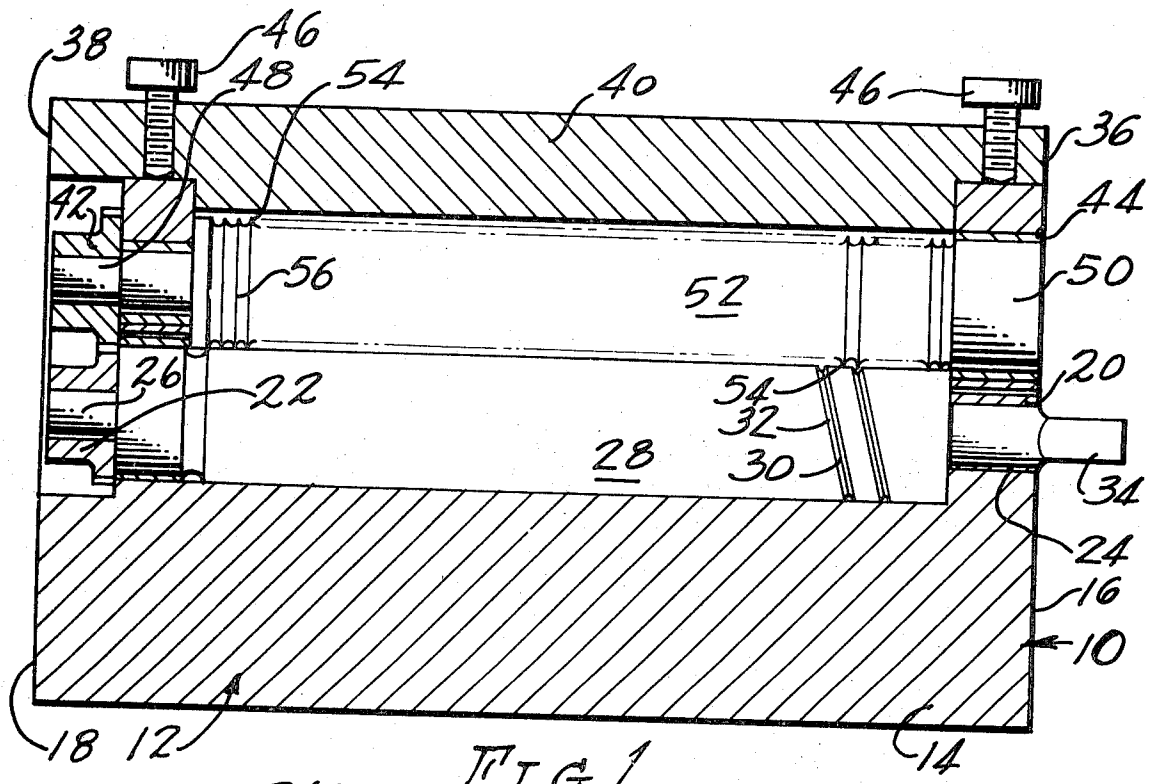

FIG. 1

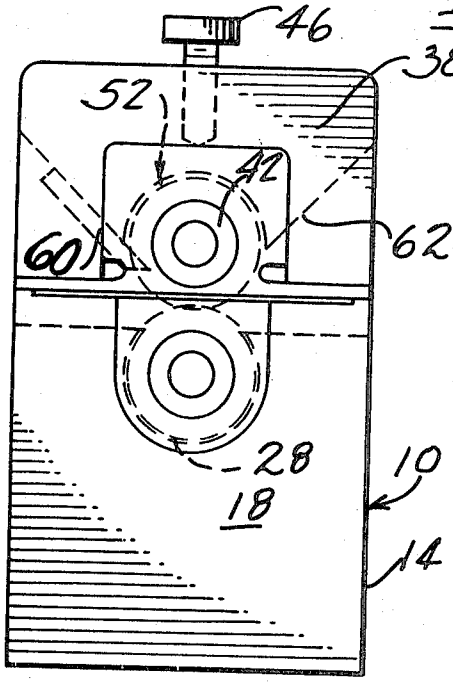

FIG. 2

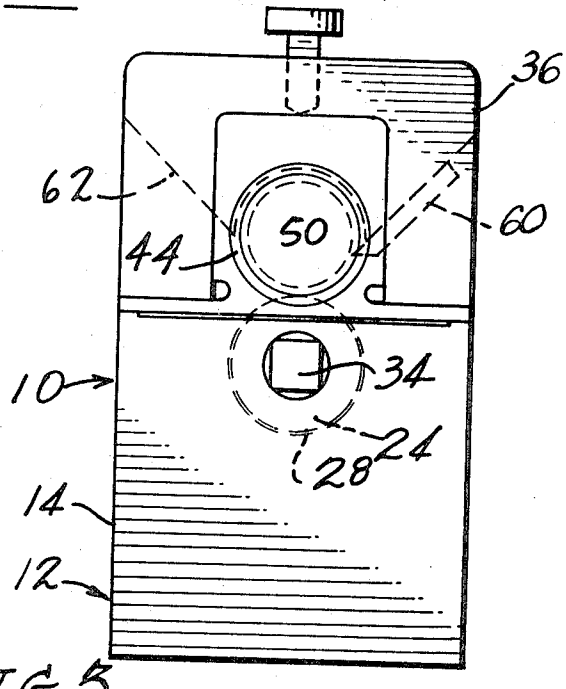

FIG. 3

INVENTOR
WARREN T. BROWN
BY Patrick L. Henry
ATTORNEY

PATENTED FEB 8 1972

3,640,279

SHEET 2 OF 3

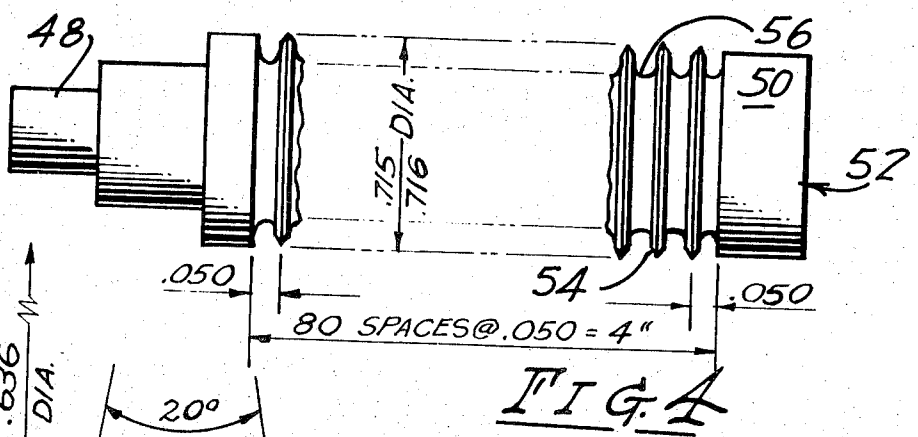

FIG. 4

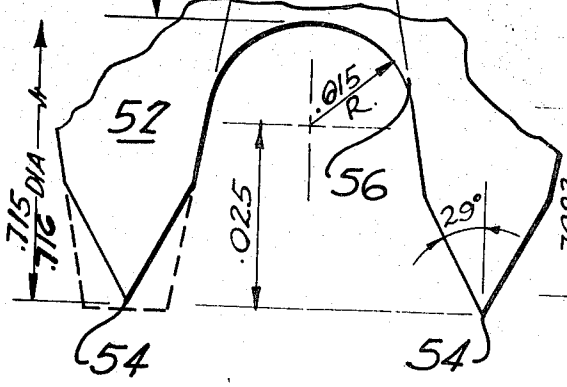

FIG. 5

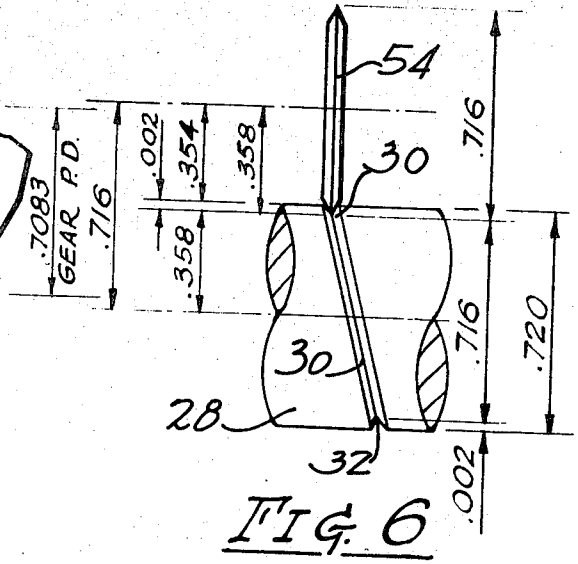

FIG. 6

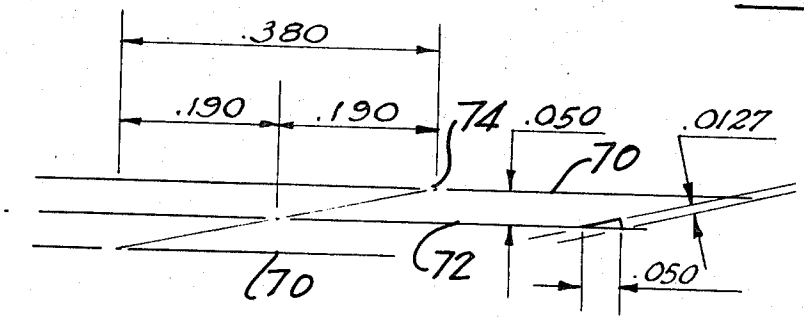

FIG. 7

INVENTOR
WARREN F. BROWN
BY Robert D. Henry
ATTORNEY

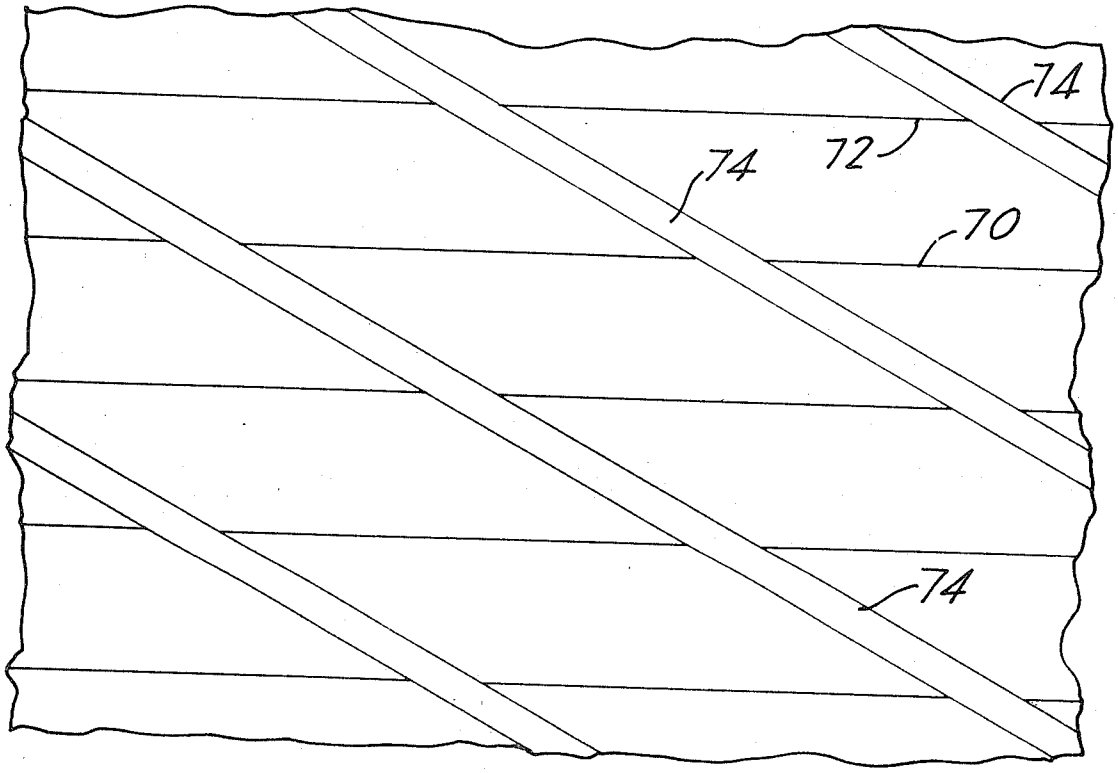

FIG. 8

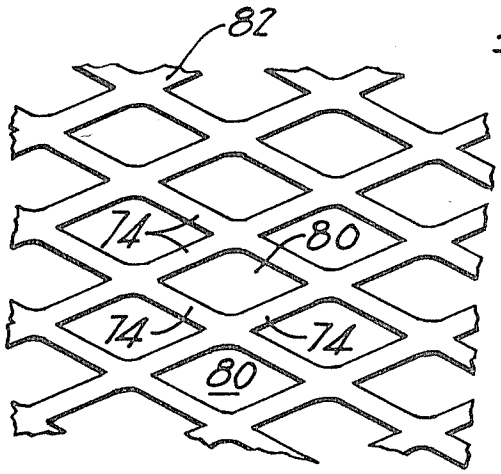

FIG. 9

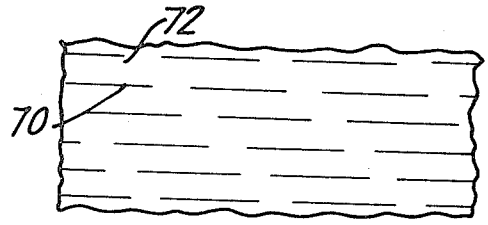

FIG. 10

INVENTOR
WARREN F. BROWN
BY Patrick J. Henry
ATTORNEY

SKIN GRAFT CUTTING METHOD AND MACHINE

BACKGROUND OF THE INVENTION

1. Field of the Invention

Methods and apparatus for preparing skin for skin grafts in plastic and reconstructive surgery. A "Brown" electric dermatone, or any dermatone, used for removing skin does not prepare the skin to cover more area than the size actually removed. Previous techniques or methods include stripping the skin into long strips and laying it or otherwise placing it on the area to which it is grafted. All of the known methods, techniques, procedures and devices relate to removing skin to be used on an area that needs grafting and the present method is directed to getting more coverage out of a piece of skin than the actual size thereof. It has been known previously to cut the skin in strips ans strip it in place leaving spaces between the strips.

2. Description of the Prior Art

Known prior art devices having to do with skin grafting includes the U.S. Pat. to Meek et al. No. 3,076,461, which discloses the device for cutting skin section into small particles or separate strips rather than slitting the skin in spaced locations which are interrupted in places and preparing the skin to be stretched to form a netlike or mesh-graft.

SUMMARY OF THE INVENTION

In a method for preparing skin for covering an area larger than the actual size of the skin removed, after the skin is removed, slitting the skin at a plurality of spaced locations in a straight line each of which slit lines is interrupted uniformly to leave joined areas with spaces inbetween and then the skin is stretched or pulled to form an expanded, latticelike, or netlike, or sievelike, graft. The machine of the present invention comprises two rollers mounted in a frame comprising roller bearings at each end. The rollers are mounted longitudinally to have relative rotation therebetween. One roller is designated as the cutting roller and comprises a plurality of circular cutting edges formed in spaced relation uniformly along the length of the roller and having the plane of the cutting edge perpendicular to the centerline of the roller. The other roller which is preferably made from a softer material than the cutting roller such as plastic or the like, has a plurality of grooves or indentations or depressions which are formed uniformly along the length corresponding with and in places complementary to the cutting edges on the cutting roller, and the plane of the bottom of the groove is at an angle to the longitudinal centerline of the roller and at an angle to the cutting edges of the other roller whereby at times the cutting edge is cutting skin on the surface of the plastic roller but at times matches with part of the groove and leaves a portion of the skin uncut along the cut line.

BRIEF DESCRIPTION OF THE DRAWINGS

Other and further objects and advantages of my invention will become apparent upon reading the following specification taken in conjunction with the accompanying drawings, in which:

FIG. 1 is a front elevation view of a skin graft cutting machine made in accordance with the present invention with part of the cutting edges and grooves on the separate rollers omitted and shown by broken lines.

FIG. 2 is a right-end elevation view of the machine shown in FIG. 1.

FIG. 3 is a left-end elevation view of the machine shown in FIG. 1.

FIG. 4 is a plan view of the cutting roller shown in FIG. 1 dimensioned to show typical dimensions in a preferred embodiment and having portions of the cutting edges omitted and shown by dash lines.

FIG. 5 is an enlarged elevation view of the cutting edges of the roller shown in FIG. 4.

FIG. 6 is a side elevation view of the roller shown in FIG. 1 dimensioned to show typical dimensions in a preferred embodiment.

FIG. 7 is a diagrammatic view of a skin graft cut in accordance with the present method and having dimensions thereon to show typical sizes.

FIG. 8 is an extremely enlarged diagrammatic view of a piece of skin cut in accordance with the present method.

FIG. 9 is a plan view of a piece of skin which has been stretched and expanded after cutting.

FIG. 10 is a plan view showing a larger section of skin at a scale more nearly to exact size than the views in FIGS. 7 and 8.

DESCRIPTION OF THE PREFERRED METHOD AND EMBODIMENT

The machine designated generally and overall by reference numeral **10** comprises a machine frame which is designated generally by reference numeral **12** and which comprises a base **14** of heavy metal such as steel or iron and which extends upwardly on opposite ends **16, 18** thereof to have opposed bearing supports in which are mounted bearings **20, 22** supporting the opposite ends **24, 26** of a grooved roller **28** having a plurality of slanted or inclined grooves **30** therein which have the bottoms **32** thereof in a plane that is perpendicular to the centerline of the roller **28**. The end **24** of roller **28** has a rectangular coupling drive portion **34** thereon.

Base **14** supports a pair of opposed, U-shaped upper frame members **36, 38** which are connected by an upper longitudinal frame member **40**. In each end of a respective opening in the U-shaped frames **36, 38** is a bearing support member **42, 44** fitted and held tightly in place by a respective screw **46**. Each bearing member **42** supports a respective end **48, 50** of a cutting roller **52** carefully manufactured from quality cutting steel or the like and having a plurality of spaced, circular cutting edges **54** formed along the length and in spaced relation thereon being separated by grooves **56** therebetween. The cutting edges **54** are in a plane each of which is perpendicular to the longitudinal centerline of the roller **52**.

Extending down against the roller **28** is a pair of plastic combs or plastic plates **60, 62** which press against the roller **52** and prevent skin from continuing around the roller rather than emerging from the upper side which it is caused to do. No carrier for the skin is necessary as the skin is fed directly and rollers **50, 28** may be autoclaved and used again and again, etc.

Roller **28** is preferably of a softer material than the cutting steel roller **52** and may be manufactured from plastic or similar material.

Since dimensional relationships and sizes and dimensions may be important with respect to the criticality of skin grafts, there is shown in FIG. 4 a typical dimension of a typical cutting roller **52** and these dimensions will not be repeated herein since they are obvious from the drawings.

Likewise, in FIG. 5 there is shown a pair of the spaced cutting edges **54** and typical dimensions are placed thereon including angles to show a preferred relationship which will give a suitable cut for preparing an acceptable graft.

In FIG. 6, which includes some typical dimensions as mentioned above in connection with other figures it is seen that the cutting edge **54** at times drops into the groove **30** when the skin is passing between the rollers **28** and **52** rather than the cutting edge **54** touching the peripheral surface of roller **28** as shown in FIG. 1. Whenever the edge **54** drops into the groove **30**, the skin is not cut and an interruption takes place in the cut in the skin uniformly along the cut line to create the skin graft which is shown in the diagrammatic views of FIGS. 7 through **10**, inclusive.

In FIG. 7 there is shown diagrammatically a line **70** representing a straight line cut made by a cutting edge **54** and another line **72** uniformly spaced therefrom as shown by the dimensions and a portion at **74** between line **72** and **70** which is interrupted and not cut as described above when the cutting edge **54** drops into a portion of the groove **30**. The inclination of groove **30** is significant insofar as the length of the cut line **70** and **72** and the length of the noncut or interrupted portion **74** since the nearer the plane of the groove **30** is to being perpendicular to the centerline of the roller **28** and the groove

being in straight alignment with the cutting edge **54** the less cut is made and the more interruption and the less of the groove **30** which is offered to the cutting edge **54** the more skin that is cut along the line **70** or **72** and the less interruption there is at **74**.

This is illustrated in considerable enlargement in FIG. **8** wherein the uncut portions **74** are seen as wider strips between the lines **70, 72**.

When a piece of skin which has been prepared in accordance with the cutting described previously and in accordance with the diagrammatic view shown in FIGS. **7** and **8**, it may then be pulled to extend or expand same and since skin tends to remain in a constant, flexible plane, the cut portions open up to form diamond-shaped openings **80** having the uncut portions **74** surrounding said opening **80** thereby creating a latticelike or netlike or mesh graft **82** shown in FIG. **9** which can be extended and expanded from a small piece of cut skin prepared in accordance with the present method and if desired on the present machine to cover a much larger area than possible from the original size of the graft itself. This is extremely important in order to cover larger areas from donor skin which is very limited especially in extensive burn cases and the like.

In FIG. **10** there is shown a typical graft which has been cut on the present machine utilizing the present method and it is seen that the lines **70, 72** extend in uniformly spaced relationship all across the graft and the interruptions **74** are at regular and spaced intervals.

While I have shown and described a particular method and procedure which is to be practiced this may vary somewhat and I do not wish to be limited to the precise method described. Also, while there is shown and described a particular embodiment of the machine there are various alterations, changes, deviations, eliminations, substitutions and departures which may be made from the particular embodiment shown without departing from the scope of my invention as defined in the appended claims.

What is claimed:

1. In a machine for cutting and preparing a piece of skin for skin graft so that the skin will cover a larger area than the original size of the skin, comprising:

a. a machine frame having an entrance therein into which the piece of skin is fed,

b. a continuously operating cutting means on said machine which directly engages said skin and cuts in the direction said skin is moving at selected places in spaced relation and interrupts same so that the skin is cut with a plurality of interrupted cuts that may be expanded, said cutting means comprising two rollers rotatably mounted on said frame and in coextensive, longitudinal relation thereon, one of said rollers being a cutting roller having a plurality of individual and separate cutting edges and the other of which is a noncutting roller having a plurality of equally spaced grooves, said individual and separate cutting edges being formed in spaced relation to each other on said cutting roller and continuously circumscribing the periphery of said cutting roller and each cutting edge operating to cut a respective place in said skin in the direction movement as said skin is continuously directed between said cutting roller and said noncutting roller, said noncutting roller having a plurality of equally spaced grooves extending around the periphery thereof and each of said grooves being at an angle with the centerline of said noncutting roller and being offset at times from the corresponding cutting edge on said cutting roller, there being contact between the cutting edges of said cutting blades on said cutting roller and directly through said skin at certain locations and against the noncutting roller so that said blade edges directly contact said skin for cutting in selected locations against the roller but for noncutting when said cutting edge pressing against said skin matches with a groove whereby skin directed between said rollers is cut along a straight line uniformly at spaced locations in the same direction of travel of said skin and said cuts interrupted periodically and uniformly when the cutting edge drops into a corresponding grooved roller.

2. The device claimed in claim **1**, wherein:

there is a means on said frame to prevent said skin from reentering said rollers after passing therebetween.

3. The device in claim **1**, wherein: said cutting means comprises an array of spaced cutting edges fixed with respect to each other and movable together against the skin and there being a discontinuous cutting surface against which said blades operate on the skin so that the cuts are interrupted and said skin is expansile.

4. The device in claim **1** wherein the plane of each of said cutting edges is substantially perpendicular to the longitudinal centerline of said cutting roller.

5. The device claimed in claim **4**, wherein:

there is a means on said frame to prevent said skin from reentering said rollers after passing therebetween.

6. The device in claim **4**, wherein:

the places between cutting edges from edge to edge is approximately 0.050.

7. The device in claim **6**, wherein each of said blades has a blade edge comprising converging blade faces and the angle of said blade faces is approximately less that 65°, in the manner shown in FIG. **6**.

8. The device in claim **4** wherein the angular relationship between the cutting edges and the grooves is that shown in FIG. **6**.

9. The device in claim **4** wherein the grooves are circumferential on said noncutting roller and at an angle of less than 90° to the center longitudinal axis.

10. The method of preparing a piece of skin for a skin graft to make said skin expansible to cover a larger area than the actual size of the piece of skin itself by means of directing said piece of skin through the machine defined in claim **5** and thereby cutting said skin as set forth in said claim **5**.

* * * * *