W. H. SAUVAGE.

SLACK ADJUSTER FOR RAILWAY BRAKES.

APPLICATION FILED JUNE 10, 1913.

1,114,295.

Patented Oct. 20, 1914.

2 SHEETS—SHEET 1.

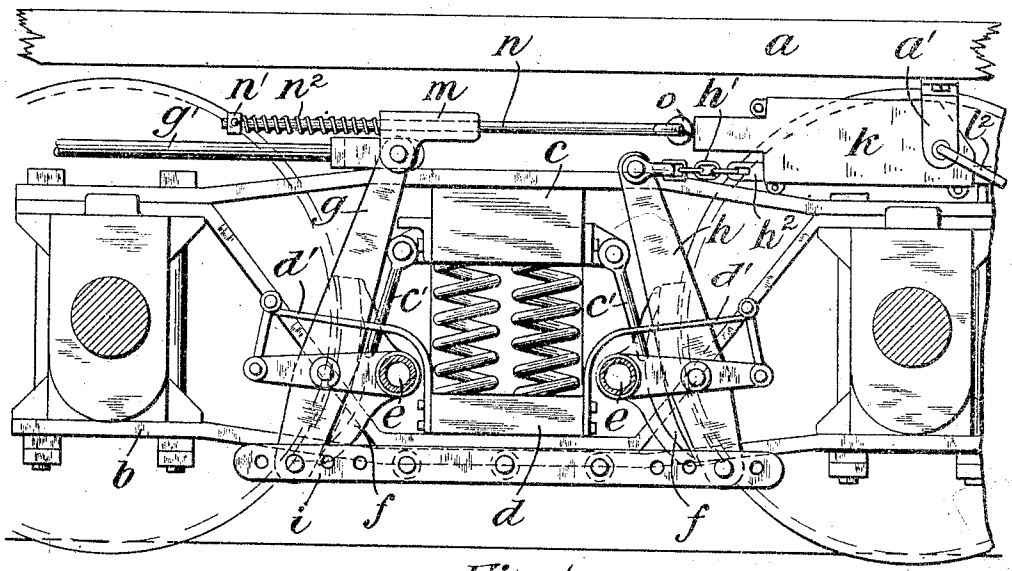

Fig. 1.

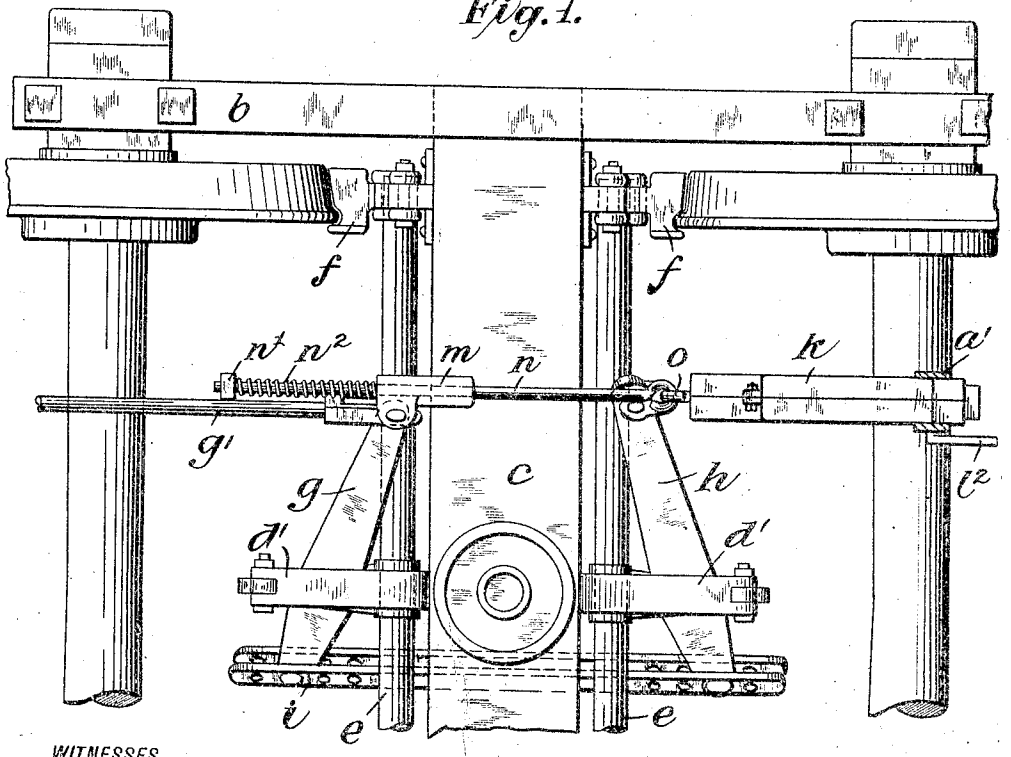

Fig. 2.

WITNESSES

Geo. H. Graves.

Wm. E. Schaefer.

INVENTOR

William H. Sauvage.

BY

Redding Greeley & Goodell

ATTORNEYS.

W. H. SAUVAGE.

SLACK ADJUSTER FOR RAILWAY BRAKES.

APPLICATION FILED JUNE 10, 1913.

1,114,295.

Patented Oct. 20, 1914.

2 SHEETS—SHEET 2.

Fig. 3.

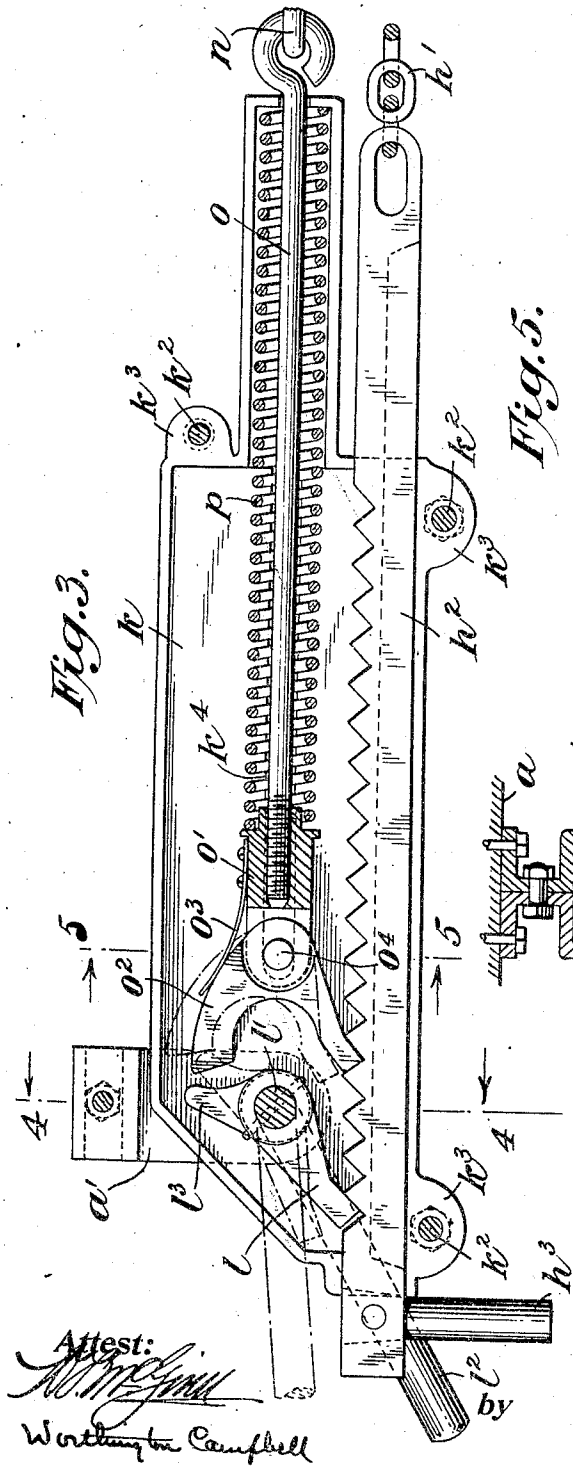

Fig. 5.

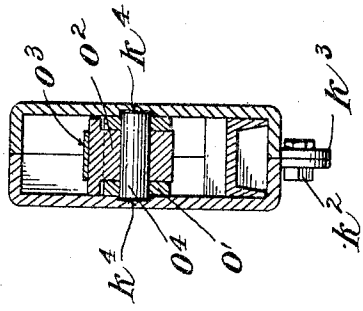

Fig. 4.

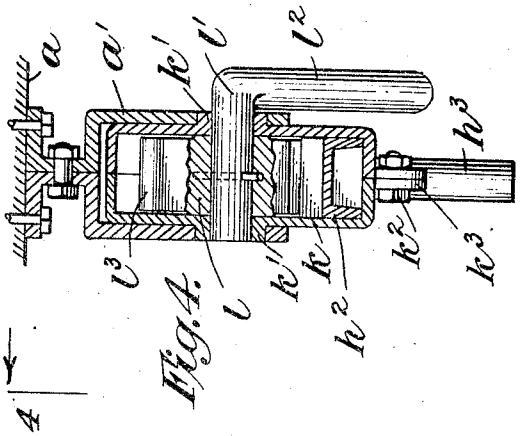

Attest:

Worthington Campbell

by

Inventor:

William H. Sauvage

Redding Greeley + Goodsell

Attys.

UNITED STATES PATENT OFFICE.

WILLIAM H. SAUVAGE, OF NEW YORK, N. Y.

SLACK-ADJUSTER FOR RAILWAY-BRAKES.

1,114,295. Specification of Letters Patent. **Patented Oct. 20, 1914.**

Application filed June 10, 1913. Serial No. 772,793.

To all whom it may concern:

Be it known that I, WILLIAM H. SAUVAGE, a citizen of the United States, residing in the borough of Manhattan of the city of New York, in the State of New York, have invented certain new and useful Improvements in Slack-Adjusters for Railway-Brakes, of which the following is a specification, reference being had to the accompanying drawings, forming a part hereof.

This invention relates to automatic slack adjusters and has for its object to improve generally devices of this character. More particularly it is concerned with slack adjusters which are mounted on the car body.

By the present invention it is sought to reduce the number of moving parts in such slack adjusters and at the same time to retain that certainty of operation which is essential to the useful employment of such a device.

Another object is to provide a slack adjuster of simple construction which may be manufactured at much less cost than any similar device now in use.

In accordance with the invention the operative parts of the adjuster comprise a sliding rack and a movable take-up rod operable upon excess travel of the live lever to move the rack and shift automatically to the desired extent the fulcrum of the dead lever.

The invention will be described more particularly with reference to the accompanying drawings in which—

Figure 1 is a fragmentary view partly in side elevation of a car truck equipped with the improved slack adjuster. Fig. 2 is a fragmentary view in plan of the parts shown in Fig. 1. Fig. 3 is an enlarged detail view, partly in side elevation, as seen from the side opposite that indicated in Fig. 1, of the operative parts of the slack adjuster, one constituent part of the casing of the adjuster being removed. Fig. 4 is a sectional view taken on the plane indicated by the line 4—4 of Fig. 3. Fig. 5 is a sectional view taken on the plane indicated by the line 5—5 of Fig. 3.

The car body a, truck frame b, truck bolster c and sand plank d are all shown as arranged in the usual relationship, the invention, however, not being limited in its application to this type of truck. The brake beams e carrying their respective brake shoes f may be supported partially from the bolster c by suitable links c' and partially by the sand plank d through suitable spring supports d'. Operatively connected to the brake beams e are the usual live and dead levers g and h, the latter being in turn connected adjacent their lower ends by an adjustable bottom rod i. The braking power for the system may be derived through the usual pull rod g' connected at one end to the upper end of the live lever g and at the other end with the power means, such as the piston of a compressed air cylinder, &c. During the application of the brakes to the wheels the entire brake system moves about the upper end of the dead lever h which remains relatively stationary and serves as a fulcrum. Accordingly, as usual, it is necessary to connect the upper end of the dead lever h securely to some fixed anchorage. In the present instance, the upper end of the dead lever h is shown as connected through a chain h' with a rack bar h^2. It is with the construction and disposition of this rack bar and its relationship to other parts that this invention is concerned.

The casing k for the moving parts of the slack adjuster is shown as suspended from the underside of the car body a by a suitable two-part clamp a' which embraces the outer sides of the casing and is apertured or recessed to receive bosses k' formed on the walls of the casing. In the interest of simplicity of construction and cheapness of manufacture, the casing k is shown as composed of two symmetrically formed portions having their meeting edges tightly secured together by bolts k^2 passing through lugs k^3 cast at different points along the meeting edges of the casing. On the floor of the casing rests the rack bar h^2 with which the dead lever h is connected. This rack bar h^2 extends freely through the ends of the casing k and is mounted to slide therein upon operation of the take-up rod, in a manner to be pointed out hereinafter. Normally, however, the rack h^2 is held stationary by a holding dog l mounted pivotally in the side walls or bosses k' of the casing k by a suitable rigid lever l' bent downwardly to form a handle l^2 whereby the dog may be rocked about the lever l' as an axis and be disengaged from the teeth of the rack. As indicated in Fig. 3 the handle l^2 of the supporting lever for the dog l is disposed angularly to the vertical so as to assist, by gravity, in holding the dog l in constant engagement with the teeth of the rack h^2. When the

supporting lever l' of the dog l is rocked about its axis manually by manipulation of the handle l^2 so as to disengage the dog from the teeth of the rack h^2, the rack may be slid freely through the casing k to release entirely the brake system. Such a complete release is often desirable as, for instance, when new brake shoes are to be applied. To facilitate movement by hand of the rack h^2 in the casing k, a depending handle h^3 may be secured to the rack adjacent its free end.

The construction and mounting of the take-up parts proper will now be described. The pull rod g' is shown in Fig. 1 as carrying pivotally a sleeve m through which extends the take-up rod n. This sleeve m may be mounted on other moving parts when desired or its mechanical equivalent may be found in widely varied constructions. Between an adjustable abutment n' carried adjacent the free end of the take-up rod n and one end of the sleeve m may be mounted a coiled spring n^2 encircling the take-up rod. The other end of the take-up rod n has a swiveled connection with a horizontally reciprocable rod or link o mounted within the slack adjuster casing k. The inner end of the rod o is adjustably connected to a coupling o' on which is pivotally secured a second dog o^2 having a downwardly extending toe to engage with the teeth of the rack bar h^2. This engagement of the dog o^2 with the teeth of the rack bar h^2 is secured normally by a suitable leaf spring o^3 carried on the coupling o' and in operative engagement with the dog. The pivot pin o^4, which has its bearing in the coupling o' and supports the dog o^2, has its extreme outer ends projecting beyond the sides of the pawl and disposed loosely in horizontal grooves k^4 cast in the inner side walls of the casing k. By mounting the pivot pin o^4 in this manner a substantial support is provided for the inner end of the rod o and the operation of the dog o^2 is insured by reason of its fixed relationship with the rack bar h^2. Normally, the take-up rod n and its link o are forced toward the left of the casing k, as viewed in Fig. 3, by a suitable spiral spring p seated at one end against the end wall of the casing k and at the other end against the coupling o'.

In operation, the brake rigging and the brake shoes are adjusted so that the upper end of the live lever may have its usual travel, about four inches more or less, and no automatic slack adjusting devices are needed. This normal travel of the pull rod, without consequent operation of the slack adjusting devices, is permitted in the present construction by the movement of the sleeve m against the action of the spiral spring n^2, the sleeve serving merely to compress the spiral spring n^2 without imparting movement to the take-up rod n. The spring n^2 is of such a length and is so disposed with respect to the sleeve m that it will be compressed solidly and constitute a solid abutment after the sleeve m (or the pull rod g') has traveled its normal distance. When slack occurs in the brake rigging or the brake shoes become worn, it will be desirable to change the fulcrum constituted by the upper end of the dead lever h. This change is brought about in the following manner. When the spring n^2 is compressed into a solid abutment by the sleeve m, excess travel of the sleeve by reason of slack, serves to move the take-up rod n to the left as viewed in Fig. 1. This movement of the take-up rod n and its link o against the action of this spring p in turn draws the dog o^2 over the teeth of the rack bar h^2. For instance, if the amount of slack is equal in lineal units to the length of the base of one tooth, the dog o^2 will be pulled over one tooth. Upon release of the pull rod g' the take-up rod n and link o, under the combined actions of the spiral springs n^2 and p, will be returned to their original position within the casing k. It will be noted that the reaction of the springs n^2 and p will not only restore the pull rod g' and its associated parts to their normal positions, but in addition will move the brakes to full release position. The interposition of the spring n^2 between the pull rod and the take-up rod and the interposition of the take-up spring p between the take-up rod and the slack adjusting devices substantially in the manner herein shown constitute important improvements in the structure of a railway brake system. In returning to this original position the rack bar h^2 will be slid within the casing to a corresponding degree, by reason of the engagement of the dog o^2 with the teeth of the rack bar. The gravity engagement of the holding dog l with the teeth of the rack bar h^2 will permit this sliding movement. From the description given it will be evident that the displacement of the rack bar h^2 within the casing and the consequent change of the fulcrum constituted by the upper end of the dead lever h will be just equal to the excess travel of the pull rod g' occasioned by slack in the brake system.

It has been deemed desirable to provide the take-up dog o^2 with an upwardly extending portion which may be engaged by a toe l^3 on the holding dog l when the holding dog l is rocked out of engagement with the teeth of the rack bar h^2, to release the dog o^2 from the rack bar. In this way the rack bar h^2 is free from all holding devices and the entire brake system may be released to permit the insertion of new brake shoes as hereinbefore suggested.

Modifications in the details of construction of the parts employed in carrying out this invention as well as changes in the arrangement of the operating parts, will suggest themselves to those skilled in the art, but all such modifications and changes are to be deemed within the scope of this invention provided they fall within the terms of the appended claims.

I claim as my invention:

1. The combination of a car body, a truck, a brake system comprising a live lever and a dead lever, an automatic take-up device mounted on the car body and including two relatively slidable members operatively connected respectively to the live lever and to the dead lever, a take-up spring and an independent release spring for the brakes interposed between the live lever and the take-up device and coöperating with said first named spring to release and move the brakes to full release position.

2. The combination of a car body, a truck, a brake system comprising a live lever and a dead lever and an automatic take-up device mounted on the car body and comprising a rack bar operatively connected to the dead lever, a take-up rod operatively connected to the live lever and slidable in one direction by excess travel of the pull rod, a dog in operative engagement with the rack bar to prevent movement thereof in the same direction and permit free movement thereof in the opposite direction, a spring to slide the take-up rod in the reverse direction, a spring-pressed pawl carried by the take-up rod and in engagement with the rack bar and operable upon said reverse travel of the take-up rod to connect the take-up rod with the rack bar whereby the fulcrum of the dead lever is moved a distance equal to the travel of the pull rod, and coöperating portions formed on the dog and pawl whereby upon manual release of the dog the pawl is moved to inoperative position.

3. The combination of a bar body, a casing secured to the car body, a truck, a brake system comprising a live lever and a dead lever and an automatic take-up device mounted within said casing and comprising a rack bar operatively connected to the dead lever, a take-up rod operatively connected to the live lever and slidable in one direction by excess travel of the pull rod, a dog in operative engagement with the rack bar to prevent movement thereof in the same direction and permit free movement thereof in the opposite direction, a spring to slide the take-up rod in the reverse direction, an adjustable coupling carried on the pull rod, a pawl pivotally mounted on the coupling the ends of the pivot pin projecting beyond the sides of the pawl, longitudinally disposed grooves formed on the inner face of the walls of the casing in which the ends of said pivot pin rest, the pawl being in engagement with the rack bar and operable upon said reverse travel of the take-up rod to connect the take-up rod with the rack bar whereby the fulcrum of the dead lever is moved a distance equal to the travel of the pull rod.

This specification signed and witnessed this fifth day of June A. D. 1913.

WILLIAM H. SAUVAGE.

Signed in the presence of—

ELLA J. KRUGER,

WORTHINGTON CAMPBELL.