June 5, 1962 I. H. POLK 3,037,365

MEANS FOR FREEING A ROW OF PACKAGES FROZEN TO ANOTHER ROW

Filed April 4, 1960 2 Sheets-Sheet 1

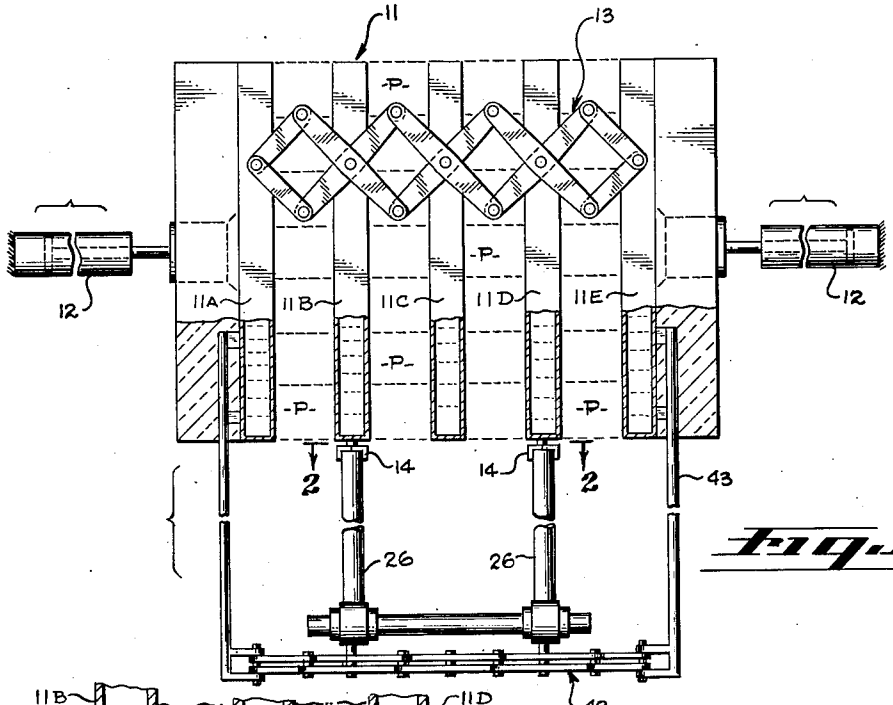

Fig. 1

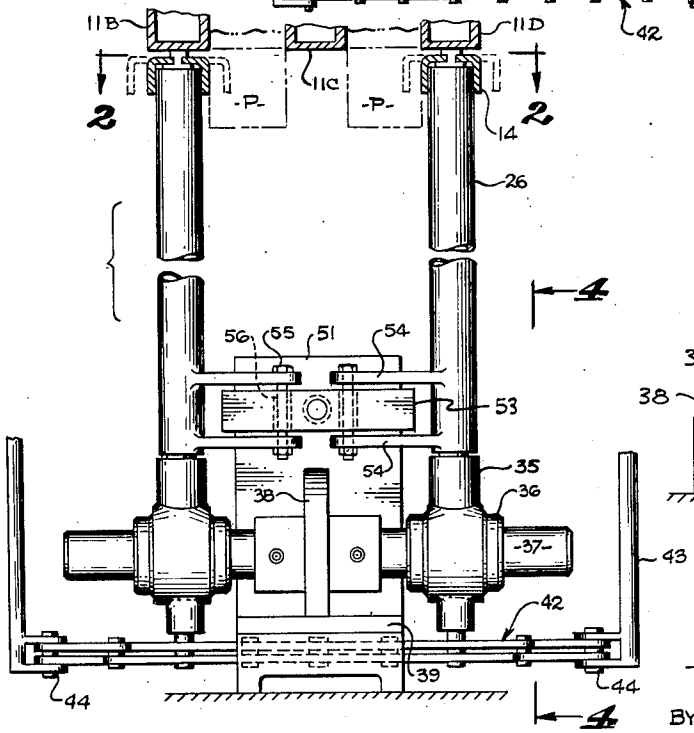

Fig. 3

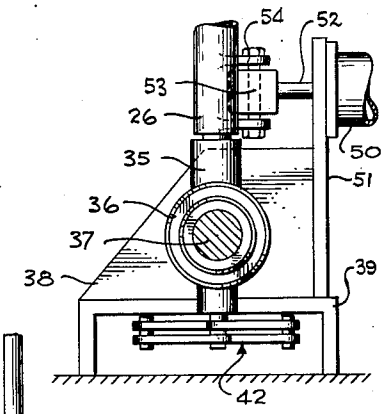

Fig. 4

ISAAC H. POLK
INVENTOR

BY Mason & Graham

ATTORNEYS

June 5, 1962 I. H. POLK 3,037,365

MEANS FOR FREEING A ROW OF PACKAGES FROZEN TO ANOTHER ROW

Filed April 4, 1960 2 Sheets-Sheet 2

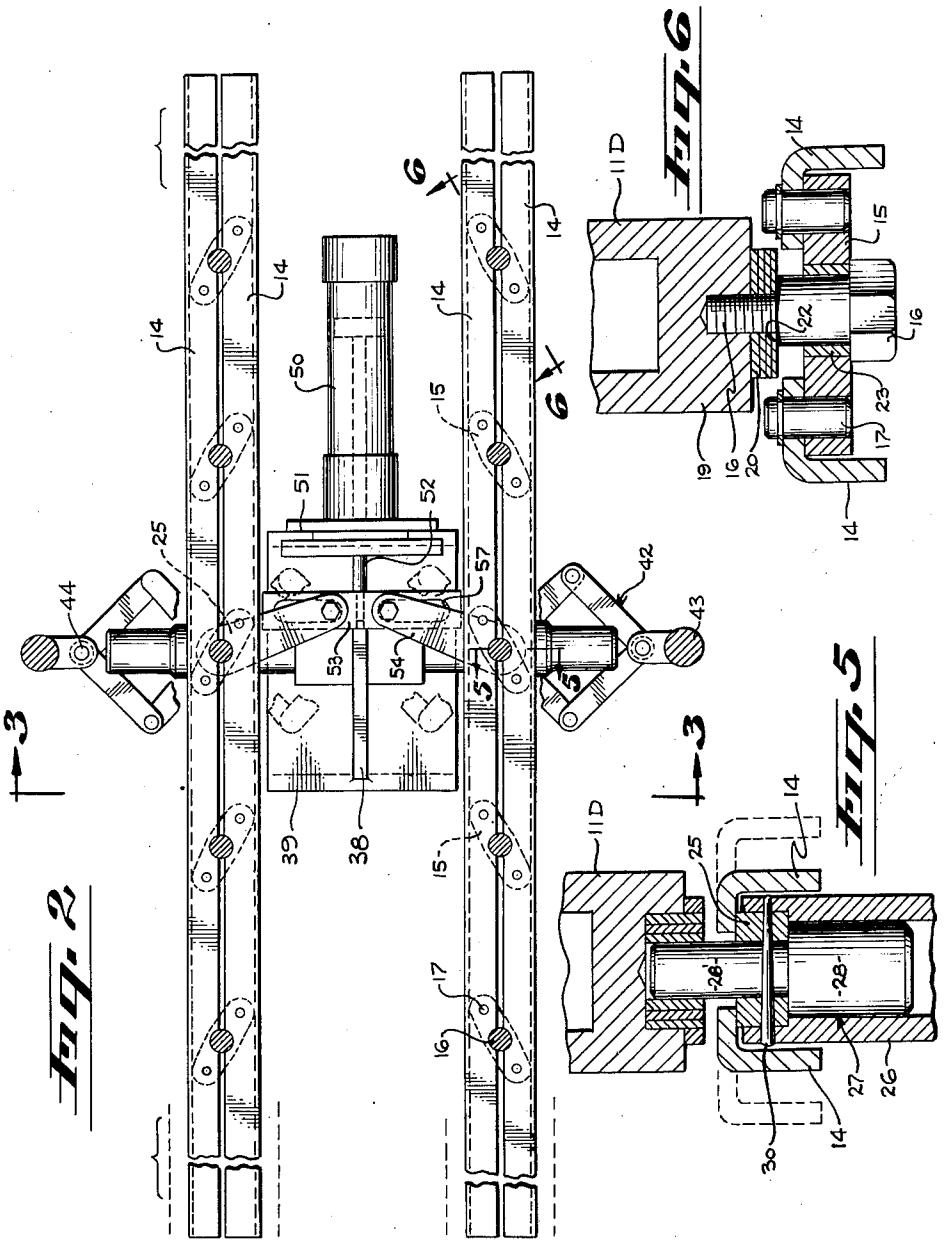

ISAAC H. POLK
INVENTOR

BY Mason & Graham

ATTORNEYS

United States Patent Office 3,037,365 Patented June 5, 1962

3,037,365
MEANS FOR FREEING A ROW OF PACKAGES FROZEN TO ANOTHER ROW

Isaac H. Polk, San Jose, Calif., assignor to The Texstar Corporation, San Antonio, Tex., a corporation of Delaware

Filed Apr. 4, 1960, Ser. No. 19,956
10 Claims. (Cl. 62—341)

This invention has to do with apparatus for freezing packaged products between parallel refrigerated plates and particularly to apparatus of this type wherein the packages are introduced between the plates at one margin thereof a row at a time and intermittently are advanced to the opposite margin thereof from which they are removed with the product in frozen condition. The invention is particularly concerned with apparatus for freeing the expelled row of frozen packages from the next adjacent row which is still between the plates and to which the expelled row of packages normally is frozen by frost or ice adhesions.

An object of the invention is to provide novel and improved means for freeing the expelled row of packages from the next adjacent row by a shearing action.

In apparatus of the general type under consideration, the plates must be moved laterally periodically to allow the packages to be advanced, new packages added and frozen ones removed. In some types of such apparatus where the plates are vertically disposed, elevators are used for movement between the planes of the inner surfaces of the plates and these necessarily occupy considerable space below the plates. It therefore is a particular object of my invention to provide novel means for laterally moving the expelled and exposed lower row of packages to shear the packages thereof free of the adjacent row which is so constructed and arranged as to accommodate the lateral movement of the plates and to accommodate the elevators.

More particularly it is an object to provide laterally movable bars mounted upon levers which are pivotally mounted at the lower edges of the plates, together with means for simultaneously actuating said levers and bars by a single prime mover located at a point remote from the lower edges of the plates through operative connections which allow for relative lateral movement of the plates.

These and other objects will be apparent from the drawings and the following description.

Referring to the drawings:

FIG. 1 is an end elevational view, somewhat diagrammatic and partly in section, of apparatus embodying the invention;

FIG. 2 is a sectional plan view on line 2—2 of FIGS. 1 and 3;

FIG. 3 is a vertical sectional view on line 3—3 of FIG. 2, on an enlarged scale;

FIG. 4 is a fragmentary sectional view on line 4—4 of FIG. 3;

FIG. 5 is an enlarged fragmentary sectional view on line 5—5 of FIG. 2; and

FIG. 6 is an enlarged fragmentary sectional view on line 6—6 of FIG. 2.

More particularly describing the invention, in FIG. 1 I show a plurality of vertically disposed hollow plates, designated 11, which are adapted to be refrigerated by circulation of refrigerant therethrough in a manner well known in the art. By way of illustration five plates are illustrated and these are designated specifically as 11A, 11B, 11C, 11D and 11E, respectively. These may be several feet high and of any practicable length. The center plate 11C should be fixedly mounted while the other

plates should be mounted for limited lateral movement to enable the insertion of packages P between the plates and the removal of packages therefrom. The mounting means is not shown since it is well known in the art. Also, any suitable means may be used to move the plates, such for example as fluid rams 12. To coordinate the movement of the plates, I provide a pantograph linkage 13 at each end of the battery of plates.

Mounted beneath each of plates 11B and 11D I provide a pair of package-engaging bars 14. The individual bars are L-shaped or right angle-shaped in cross section and are carried upon a plurality of levers 15 carried on studs 16. Pins 17 mounted in the levers pivotally support the bars. The studs 16 thread into the lower edge portions 19 of the plates and washers 20 serve to space each stud below the plate in which it is mounted, being interposed between the lower edge of the plate and a shoulder 22 on the stud. A bushing 23 is provided between each stud and its associated lever 15.

It will be apparent that the bars 14 can be moved from a retracted position wherein they lie within the planes of the sides of the plates upon which they are mounted, as best shown in FIGS. 2, 3 and 4 to an expanded position beyond the planes of the plates, as shown by the broken lines in the same figures. In order to effect this movement of the bars, each pair of bars is provided with an actuating lever 25 which is fixedly mounted at the upper end of a tubular shaft 26. The lever 25 receives the reduced upper end portion 28' of a cylindrical insert 27 having an enlarged body portion 28 received in the shaft. A crosspin 30 fixedly secures the insert 27 and lever 25 to the shaft 26. The lower ends of the shafts 26 are journaled in suitable bearings 35 mounted upon bushings 36 which are slidably supported on a cross member 37 secured to a web 38 forming part of a mounting base 39.

To insure movement of the bushings 36 in coordination with the lateral movement of the plates 11B and 11D, I provide an auxiliary pantograph linkage, designated 42, which is pivotally connected to the two bushings 36. This linkage is actuated by arms 43 attached to the outer plates 11A and 11E and extending downwardly therefrom, the ends of the linkage being pivotally connected respectively to the arms at points 44. This arrangement maintains the shafts 26 vertical and prevents any binding at the bushings 36.

For the purpose of actuating the shafts 26 rotatively, I provide a cylinder 50 which is fixedly mounted upon upright base plate frame 51. A piston (not shown) in the cylinder has a piston rod 52 which is secured at its forward end in a crosshead 53. Any suitable conventional fluid supply and control means can be used in conjunction with the cylinder. Each shaft 26 is provided with a pair of vertically spaced, inwardly projecting arms 54 and these are connected to the crosshead, which is freely received therebetween, by a pin and slot type connection comprising the bolt assemblies 55 which extend through holes in the arms and carry bearing sleeves 56 received in slots 57 extending transversely of the direction of movement of the crosshead.

With the construction provided, the rails 14 can be readily moved from the contracted position in which they are shown in full lines in FIGS. 2, 3 and 4 to the expanded position shown in broken lines. Also the pin and slot connection between the piston or crosshead thereof and the arms 54 of the shafts 26 enables the shafts to move with the plates as required in the normal operation of apparatus of this type.

In the operation of the apparatus, the packages P containing the product to be frozen are advanced intermittently from top to bottom between the plates and discharged a row at a time. Since the discharged lower

rows of packages normally are frozen to their adjacent rows, the bars 14 are moved from contracted to expanded position to shear the lower rows of packages free. After this has been accomplished the bars are contracted to lie within the planes of the plates upon which they are mounted.

Although I have illustrated and described a preferred form of my invention, I contemplate that various changes and modifications can be made therein without departing from the invention, the scope of which is indicated by the following claims.

For example, while there are certain advantages to be gained by having the plates vertically disposed as shown and described, the apparatus is also useful in an installation in which the plates may be disposed horizontally, or at an angle between the horizontal and vertical. In any such other disposition of the plates, the relation of the elements one to another and their function remain the same.

I claim:

1. In apparatus for freezing products contained in packages, said apparatus including refrigerated plates between which the packages are disposed in rows and between which the packages are advanced as a unit intermittently to expel the outer row of packages from between the plates, means for freeing an outer row of packages projecting beyond a given edge of the plates from the next adjacent row located between the plates and to which the outer row is joined by ice adhesions, comprising a package-engaging bar movably mounted adjacent the given edge of and carried by one of said plates and disposed in the general direction of the edge of the plate and normally positioned within the planes of the sides of the plate, said bar being positioned to engage the packages of the outer row closely adjacent the plane of ice adhesions between the outer row and next adjacent row, and means for moving said bar laterally beyond the plane of one side of the plate whereby to engage the sides of the packages of said outer row and move said packages parallel to the plane of the ice adhesions between said outer and next adjacent row thereby shearing the packages of said outer row free of the packages of said next adjacent row, said means for moving said bar being contained within the planes of the sides of the plate in the region of the bar and for a substantial distance beyond the given edge of the plate.

2. The apparatus of claim 1 in which said bar is supported pivotally upon a plurality of levers pivotally mounted on said one plate, and in which power-actuated means is provided for pivoting said levers.

3. In apparatus for freezing products contained in packages, said apparatus including refrigerated plates between which the packages are disposed in rows and between which the packages are advanced as a unit intermittently to expel the outer row of packages from between the plates, means for freeing an outer row of packages projecting beyond a given edge of the plates from the next adjacent row located between the plates and to which the outer row is joined by ice adhesions, comprising a plurality of short levers pivotally mounted at spaced regions on the given edge of said plates for swinging movement about axes, said means for moving said bar being contained within the planes of the sides of the plate in the region of the bar and for a substantial distance beyond the given edge of the plate, a package-engaging bar pivotally mounted on each of said levers at points thereon spaced from the pivotal axes of the levers on the plates, said levers normally being so positioned that said bar lies parallel to the plate and within the planes of the sides of the plates, and power-actuated means for pivoting one of said levers whereby to cause said bar to move laterally beyond the plane of one side of said plate.

4. In apparatus for freezing products contained in packages, said apparatus including vertical refrigerated plates between which the packages are disposed in rows and between which the packages are advanced as a unit intermittently to expel the outer row of packages from between the plates, means for freeing an outer row of packages projecting beyond a given edge of the plates from the next adjacent row located between the plates and to which the outer row is joined by ice adhesions, comprising a plurality of short levers pivotally mounted at spaced regions on the given edge of said plates for swinging movement about axes within the planes of the sides of the respective plates and normal to said given edges, two parallel package-engaging bars pivotally mounted on said levers on opposite sides, respectively, of the pivotal axes of said levers on said plate, said bars normally lying within the planes of the sides of said plates, and power-actuated means for turning one of said levers whereby to cause said bars to move away from each other laterally beyond the planes of the side of said plate.

5. The apparatus set forth in claim 4 in which said power-actuated means comprises a shaft fixedly connected to one of said levers and extending axially of the pivotal axis of the lever, and piston-cylinder means for turning said shaft.

6. In apparatus for freezing products contained in packages, said apparatus including refrigerated plates between which the packages are disposed in rows and between which the packages are advanced as a unit intermittently to expel the outer row of packages from between the plates, means for freeing an outer row of packages projecting beyond a given edge of the plates from the next adjacent row located between the plates and to which the outer row is joined by ice adhesions, comprising a plurality of short levers pivotally mounted at spaced regions of the given edge of alternate plates for swinging movement about axes within the planes of the sides of the respective plates and normal to said given edges, two parallel package-engaging bars pivotally mounted on said levers on opposite sides, respectively, of the pivotal axes of said levers of each of said alternate plates, said bars normally lying within the planes of the sides of the plates, a prime mover mounted a substantial distance beyond the given edges of said plates, and flexible means operatively connecting said prime mover with a lever of each of said alternate plates whereby to turn said connected levers and allow said plates to move laterally.

7. The apparatus of claim 6 in which said flexible means comprises a shaft fixedly connected to one of said levers of each of said alternate plates and extending axially of the connected lever, an arm on said shaft, and a flexible connection between said arm and said prime mover.

8. In apparatus for freezing products contained in packages, said apparatus including refrigerated plates mounted for limited lateral movement and between which the packages are disposed in rows and between which the packages are advanced as a unit intermittently to expel the outer row of packages from between the plates, means for freeing an outer row of packages projecting beyond a given edge of the plates from the next adjacent row located between the plates and to which the outer row is joined by ice adhesions, comprising a plurality of short levers pivotally mounted at spaced regions of the given edge of alternate plates for swinging movement about axes within the planes of the sides of the respective plates and normal to said given edges, two parallel package-engaging bars pivotally mounted on said levers on opposite sides, respectively, of the pivotal axes of said levers of each of said alternate plates, said bars normally lying within the planes of the sides of the plates, a prime mover mounted a substantial distance beyond the given edges of said plates, a shaft fixedly connected to one of said levers of each of said alternate plates and extending axially of the connected lever, means supporting said shafts at a region beyond said given edges of said plates

for limited lateral movement in the direction of lateral movement of the plates, an arm on each said shaft, and a flexible connection between said prime mover and each arm.

9. The apparatus set forth in claim 8 in which said plates are provided with a pantograph linkage coordinating lateral movement of the plates and in which said shafts are provided with a pantograph linkage operably connected for actuation by the plates to coordinate movement of said shafts with said plates.

10. In apparatus for freezing products contained in packages, a plurality of laterally spaced parallel refrigerated plates, means mounting said plates for limited lateral movement relative to each other, means for moving the plates, a package-engaging bar mounted on each of two of said plates at corresponding edges thereof normally within the planes of the sides of the plates, each bar being mounted for movement beyond the plane of a side of the plate on which it is mounted, a shaft journaled

at one end in each of the plates upon which a bar is mounted and extending normal to the edge of the plate, means operably connecting each shaft with the adjacent bar on the plate for moving the bar, means journaling the other ends of said shafts and supporting the same for lateral movement, a pantograph linkage means connecting said plates, an auxiliary pantograph linkage connecting said shafts and operably connected to said plates to insure movement of the shafts with the plates, and power means for rotating said shafts.

References Cited in the file of this patent

UNITED STATES PATENTS

1,905,131	Birdseye	Apr. 25, 1933
2,200,424	Kubaugh	May 14, 1940
2,259,066	Gaston	Oct. 14, 1941
2,397,347	Gruner	Mar. 26, 1946
2,631,440	Polk	Mar. 17, 1953