Nov. 3, 1931. J. F. MERKEL 1,830,121

COLOR ATTACHMENT FOR CINEMA PROJECTORS

Filed Dec. 3, 1927 4 Sheets-Sheet 1

Fig. 1

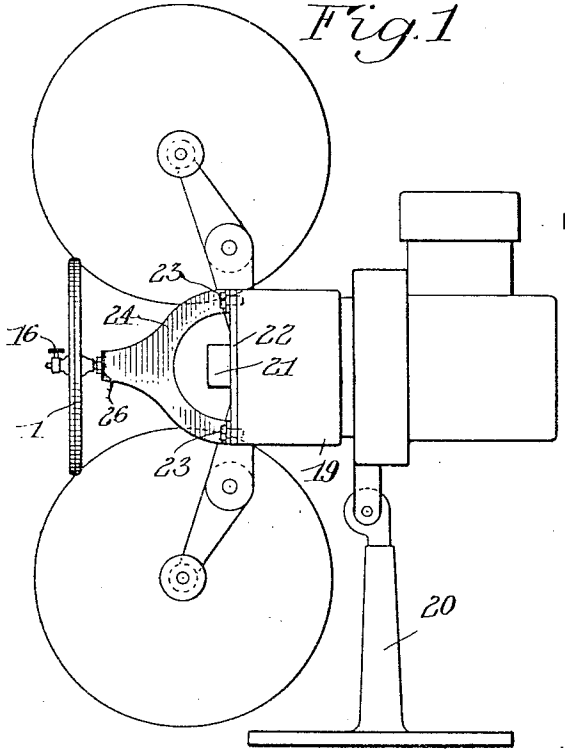

Fig. 4

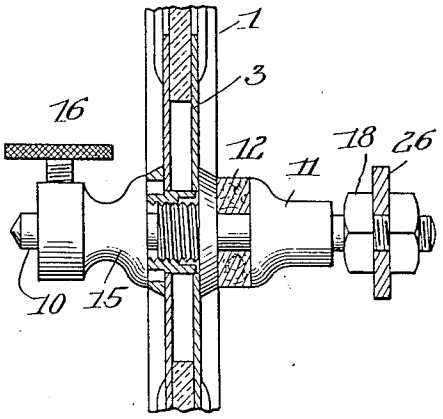

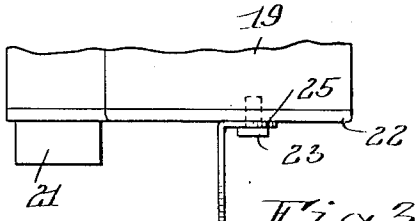

Fig. 3

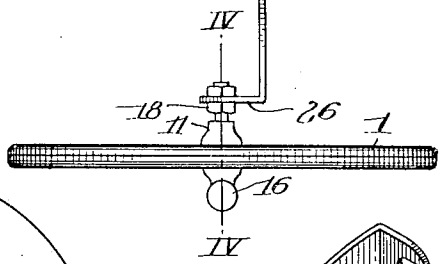

Fig. 2

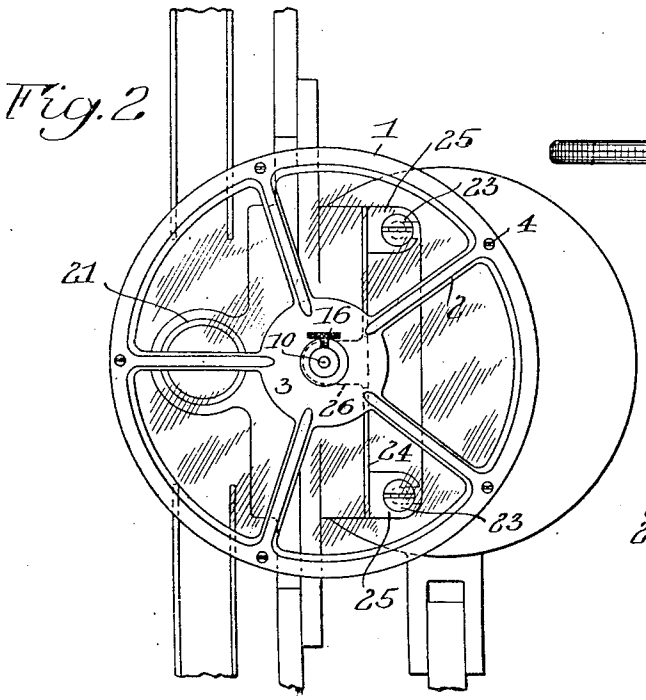

Fig. 5

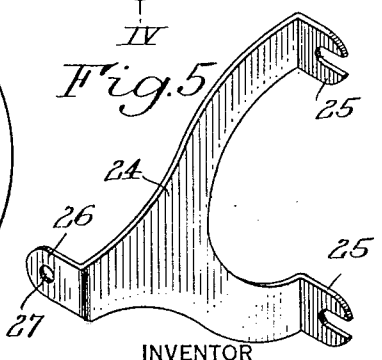

INVENTOR
Joseph F. Merkel
BY
Crumpton & Griffith
his ATTORNEYS

Nov. 3, 1931. J. F. MERKEL 1,830,121

COLOR ATTACHMENT FOR CINEMA PROJECTORS

Filed Dec. 3, 1927 4 Sheets-Sheet 2

Fig. 6

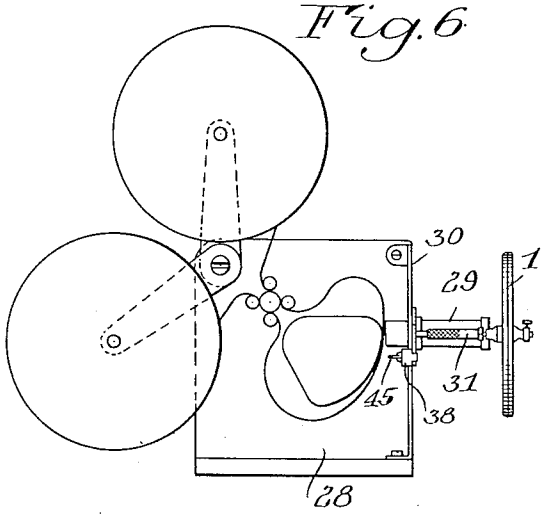

Fig. 8

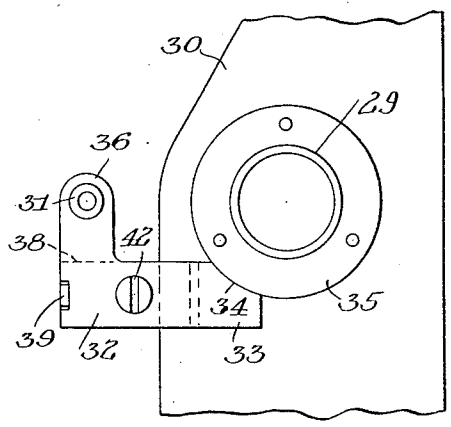

Fig. 7

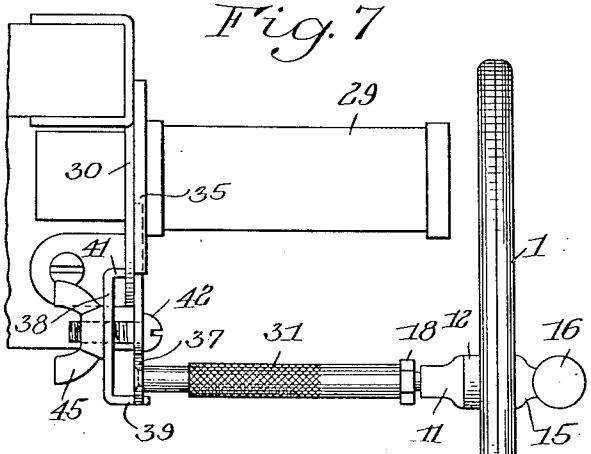

Fig. 10

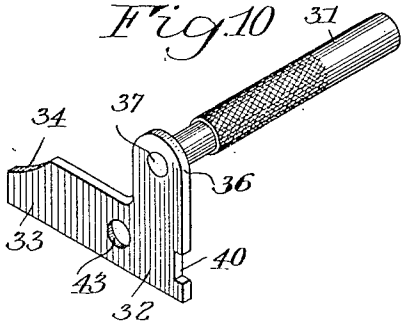

Fig. 11

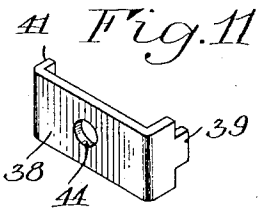

Fig. 9

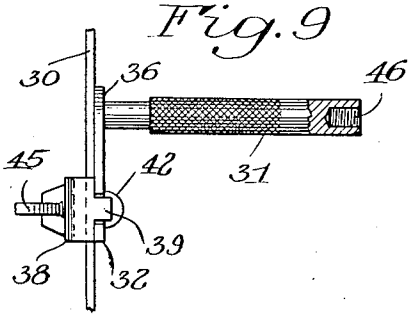

INVENTOR
Joseph F. Merkel
BY Cumpston & Griffith
his ATTORNEYS

Nov. 3, 1931. J. F. MERKEL 1,830,121

COLOR ATTACHMENT FOR CINEMA PROJECTORS

Filed Dec. 3, 1927 4 Sheets-Sheet 3

Fig. 12

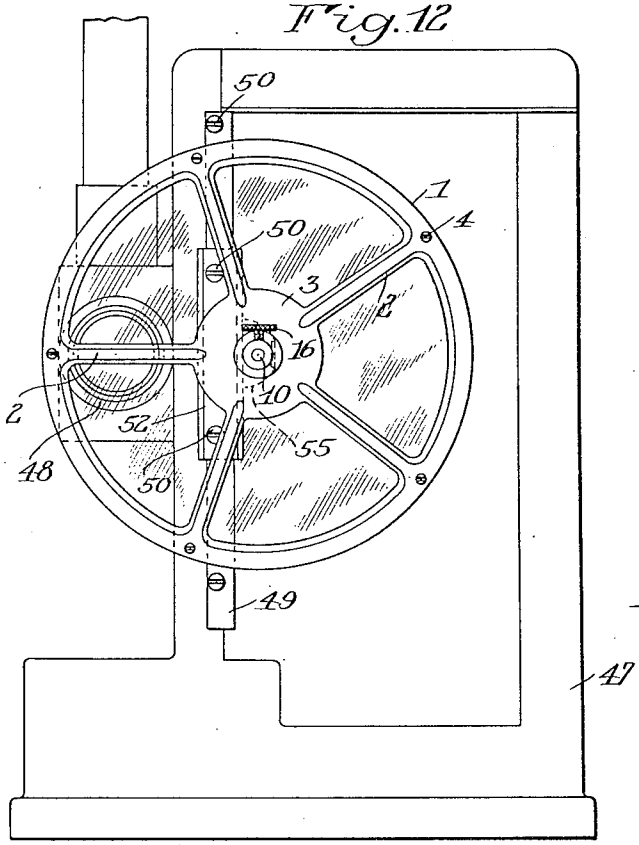

Fig. 13

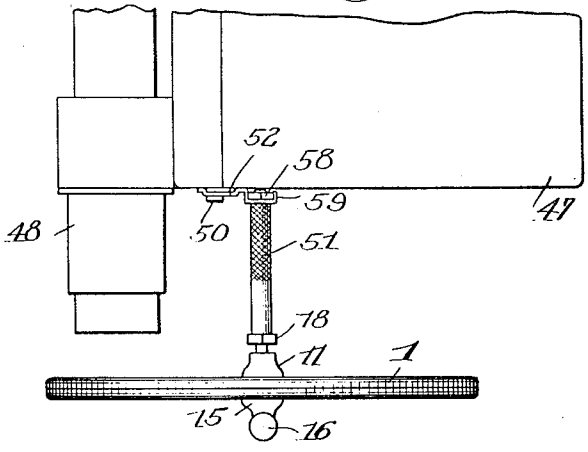

Fig. 14

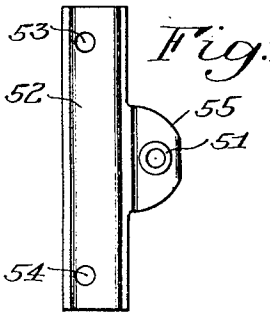

Fig. 15

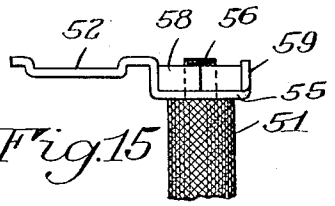

Fig. 16

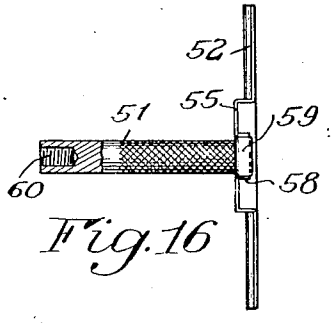

Fig. 17

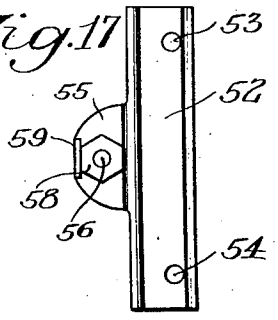

INVENTOR
Joseph F. Merkel
BY Dumpston & Griffith
his ATTORNEYS

Nov. 3, 1931. J. F. MERKEL 1,830,121

COLOR ATTACHMENT FOR CINEMA PROJECTORS

Filed Dec. 3, 1927 4 Sheets-Sheet 4

Fig. 18

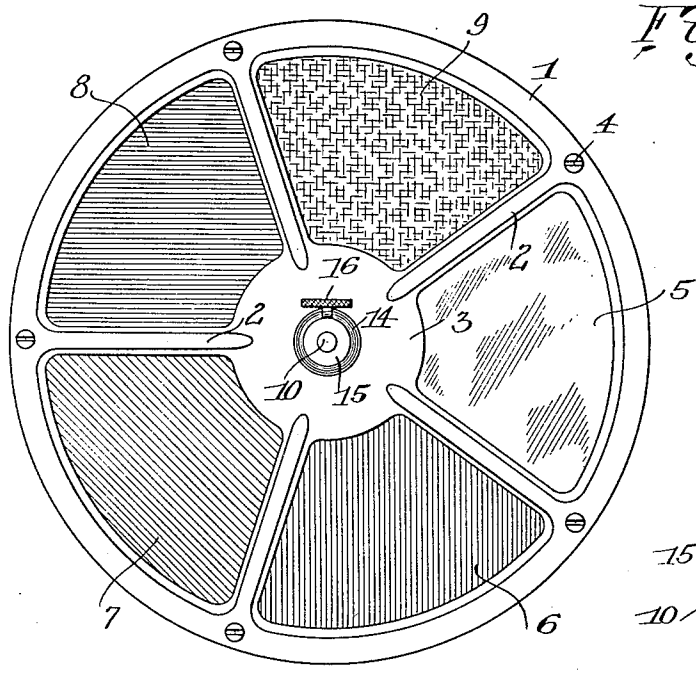

Fig. 19

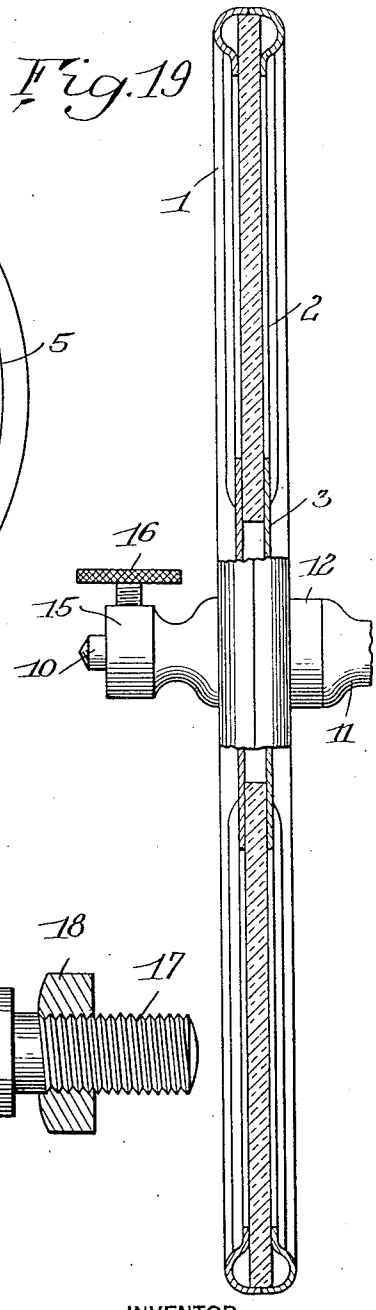

Fig. 20

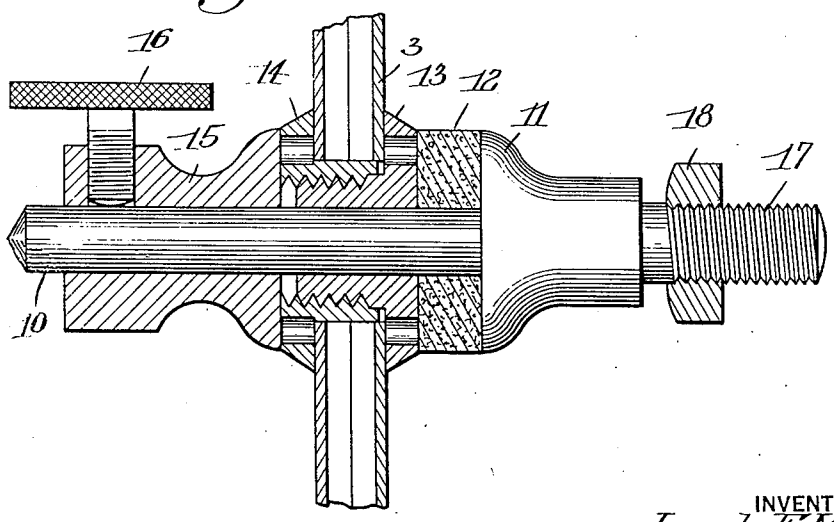

INVENTOR
Joseph F. Merkel
BY
Crumpton & Griffith
his ATTORNEYS

Patented Nov. 3, 1931 1,830,121

UNITED STATES PATENT OFFICE

JOSEPH F. MERKEL, OF ROCHESTER, NEW YORK, ASSIGNOR TO BECKLEY & CHURCH, INC., OF ROCHESTER, NEW YORK, A CORPORATION OF NEW YORK

COLOR ATTACHMENT FOR CINEMA PROJECTORS

Application filed December 3, 1927. Serial No. 237,398.

This invention relates to optical apparatus, more particularly to cinema projector apparatus, and has for an object the provision of a simple, efficient and inexpensive attachment for such projectors which enables the operator to control the color of the projected image, to increase realism and reduce eye strain.

Another object of the invention is the provision of such a device which is easily adapted to the commercial types of projectors known to the trade as "amateur" projectors, and embodies special attaching brackets for this purpose.

A further object is to provide such an attachment which will allow the image projected by the apparatus to be tinted in a plurality of colors in different portions thereof, the adjacent borders of the tinted portions being blended.

To these and other ends the invention resides in certain improvements and combinations of parts, all as will be hereinafter more fully described, the novel features being pointed out in the claims at the end of the specification.

In the drawings:

Fig. 1 is a side view of the present invention attached to a well known type of amateur projector;

Fig. 2 is a fragmentary front view thereof;

Fig. 3 is a plan view of the same;

Fig. 4 is an enlarged detail of the mounting for the color screen upon the bracket taken partly in section on the line IV—IV of Fig. 3;

Fig. 5 is a perspective view of the mounting bracket;

Fig. 6 is a side view of the device mounted on a second well known type of projector;

Fig. 7 is an enlarged fragmentary plan view of the same;

Fig. 8 is a detail of the mounting bracket attached to the lens plate of the projector;

Fig. 9 is a side view of the bracket as attached to the lens plate;

Fig. 10 is a perspective of the mounting bracket;

Fig. 11 is a perspective of the clamping member for the bracket;

Fig. 12 is a front view of the device mounted on a third commercial type of projector;

Fig. 13 is a fragmentary plan view thereof;

Fig. 14 is an end view of the bracket;

Fig. 15 is a fragmentary enlarged plan view of the bracket;

Fig. 16 is a side view of the bracket;

Fig. 17 is a bottom view of the bracket;

Fig. 18 is a face view of the color screen with the colors of the segments indicated by shading;

Fig. 19 is an enlarged side view of the same, partly in section, and

Fig. 20 is an enlarged sectional view of the wheel hub mounted on its bearing shaft.

Similar reference numerals throughout the several views indicate the same parts.

The present invention constitutes an improvement on the structure disclosed in the copending application of Walter R. Beckley, Alfred E. Church and Joseph F. Merkel, Serial No. 208,872, filed July 27, 1927, which discloses the general arrangement of a rotary multi-colored ray screen mounted in operative relationship to the lens of a cinema projector.

The light coloring or filtering device of the present invention comprises, as here exemplified, a wheel or disk embodying a series of transparent colored segments of plane glass or other suitable medium, and means for rotatably mounting the disk in front of the lens of known types of projectors in such a position that the cone of light projected by the lens will traverse such segments and be colored thereby.

Referring first to Figs. 18 and 19 of the drawings, it will be seen that the ray screen consists of a wheel preferably formed from sheet metal such as sheet aluminum and comprising a pair of disks each composed of a rim 1, spokes 2 and hub 3. These disks are clamped together in registry by means of screws 4 and enclose between them the edges of the colored segments composing the ray screen. These colored segments, numbered 5 to 9 inclusive, are selected and arranged with the particular object in view of enabling the operator of the device to secure the most realistic color effects in the projected image. In

the present embodiment of the invention the segments as illustrated in Fig. 18 are colored as follows: Segment 5 is clear glass; segment 6 is red; segment 7 is green; segment 8 is blue and segment 9 is amber. This arrangement has been found particularly advantageous for the purpose in view as will be further pointed out hereinafter, but, of course, other arrangements may be found preferable for securing certain special effects.

It will be noted that the spokes 2 are arranged radially and are made as narrow as practicable. This feature is particularly important in that it allows the operator to position the screen with two adjacent segments simultaneously intercepting portions of the light cone and imparting their colors to different areas of the projected image. Since the screen is arranged adjacent the lens, the spoke which separates the two segments will cast no shadow on the screen, and the two colors will blend into each other without a sharp line of demarcation.

The mounting for the ray screen is best illustrated in Fig. 20 which shows a bearing shaft 10 having a shoulder 11 thereon. A cork thrust washer 12 is slid on the shaft against the shoulder 11, and the hub 3 of the wheel, clamped between the bearing member 13 and its nut 14, is then placed upon the shaft. The retaining member 15 is then slid on the end of the shaft and locked in place by the set screw 16, sufficient pressure being applied to the member 15 to cause the wheel to be frictionally retained in any rotary position in which it is placed. The bearing shaft 10 is threaded at 17 on its inner end and carries a nut 18.

Referring now to Figs. 1 to 5 of the drawings, Fig. 1 illustrates a well known type of amateur projector comprising a body 19 mounted on the base 20 and having a lens tube 21 mounted in the lens plate 22. The plate 22 is attached to the body by means of cap screws 23. In carrying out the present invention a bifurcated bracket 24 is provided having slotted feet 25 at one end so spaced as to register with the cap screws 23. The other end of the bracket is formed with a lug 26 bent parallel to the feet and perforated to receive the threaded portion 17 of the bearing shaft 10.

In assembling the device, the cap screws 23 are loosened, the feet 25 of the bracket are slipped thereunder, and the cap screws again tightened. The shaft 10 with the ray screen mounted thereon is inserted through the opening 27 in lug 26 and a nut threaded on the shaft to clamp the same to the bracket. It will be noted that the bracket is so positioned that the axis of the screen is in the same horizontal plane as the axis of the lens, and spaced sufficiently therefrom, as shown best in Fig. 2 so that the cone of light projected by the lens will be intercepted by the segments of the screen.

Figs. 6 to 11 of the drawings illustrate the attachment of the present invention to a second commercial form of amateur projector. Referring to Fig. 6, it will be seen that the projector comprises a body 28 carrying on the front thereof a lens tube 29 attached to the lens plate 30. It will be noted that the lens plate extends laterally from the body as shown in Figs. 6 and 8, and the ray screen is mounted thereon by means of the bracket illustrated in Fig. 10. This bracket as there shown consists of a shank 31 and a base member 32. The base member is angular in shape, having one arm 33 adapted to rest against the front of the lens plate, and cut away to form an arcuate shoulder 34 adapted to bear against the flange 35 of the lens barrel. The other arm 36 of the base is perforated and a reduced extension 37 of the shank is riveted therein.

It will be noticed by reference to Fig. 8 that the base is so dimensioned that when the arm 33 is placed horizontally with the shoulder 34 bearing on the flange 35, the axis of the shank 31 will be level with and parallel to the axis of the lens and at the proper distance therefrom. The clamping member 38 shown in Fig. 11 is generally of U-shape, having one arm notched to form an extending lug 39 adapted to cooperate with the notch 40 of the base member, and the other arm 41 being sufficiently shortened to cooperate with the rear side of the lens plate in clamping the base thereto. A bolt 42 is passed through the registering openings 43 and 44 in the base member and clamping member respectively, and a wing nut 45 is placed thereon to clamp the parts together.

The outer end of the shank 31 is drilled and tapped as shown at 46 in Fig. 9 to receive the threaded end 17 of the bearing shaft. It will thus be seen that in assembling the device, the shaft 10 is threaded into the shank 31 and tightened therein by the lock nut 18. The clamp formed by the base 32, clamping member 38 and bolt 42 is then placed in operative position around the lens plate 30, and the nut 45 tightened to fix the same in position.

The method of adapting the invention to a third type of commercial projector is illustrated in Figs. 12 to 17 inclusive. In Fig. 12 the projector is illustrated as having a body 47 carrying the lens tube 48 and having a mounting plate 49 secured to the body by screws 50. The ray screen is mounted on this structure by means of the bracket illustrated in Figs. 14 to 17 inclusive.

This bracket consists of a shank 51 and a base plate 52. The base plate is generally rectangular and of a channel form, and is drilled near the ends thereof as shown at 53 and 54, the openings being spaced to register

with a pair of the screws 50. At the middle of the base a laterally extending lug 55 of angular shape is provided which is drilled to receive the reduced and threaded extension 56 of the shank 51. In assembling the bracket the extension 56 is passed through the opening in the lug and screwed into the nut 58 to fix the shank to the base. The lip 59 of the lug and its angular junction with the base plate serve to hold the nut against turning. The outer end of the shank is drilled and tapped as shown at 60 in Fig. 16 for the reception of the threaded end 17 of shaft 10.

In assembling this structure a pair of screws 50 are removed and the base 52 placed over the mounting plate 49 with the openings 53 and 54 registering with the screw holes. The screws are then reinserted and tightened to clamp the bracket to the body of the projector. The ray screen is then placed upon the shaft 10 and tightened thereon by member 15. It will be noted here again that the bracket is so shaped and dimensioned that the axis of the screen is level with the axis of the lens and properly spaced therefrom.

In operating this device after it has been attached to the projector as above described, all that is necessary is for the operator to rotate the screen to bring the appropriately colored segment in front of the lens in order to tint the image to the prevailing color of the subject. It will be appreciated, however, that many types of scenes are not monochromatic, but that there are usually two predominating colors, and that their lines of demarcation is usually substantially horizontal, as, for example, blue sky above a green foreground. For treating such subjects the above arrangement of the screen is most advantageous since the radial spokes of the screen will cross the axis of the lens horizontally, and the adjacent colored segments will impart their prevailing tints to the proper portions of the image.

The segments of the screen have been designed and arranged with this particular idea in view, and the arrangement above specified has been found most satisfactory to produce the combinations of colors generally required. Of course, it will be appreciated that other arrangements might be used for particular subjects, and that in special cases it might be desirable to tint different vertical portions of an image in different colors, but since such an arrangement of lighting is extremely unusual, the above arrangement is the preferred modification of this invention.

The versatility of this arrangement is further enhanced by the fact that the screen is constructed symmetrically and can, therefore, be reversed and faced about on the bearing shaft 10 in order to reverse the sequence of the colors. For instance with the screen arranged as shown in Fig. 18 and the lens being considered behind the left side of the screen, it will be apparent that the screen will be adapted to effectively render a landscape consisting of a green foreground and blue sky, whereas by reversing the screen on the shaft and rotating it counter-clockwise through the angle of one segment, it will be arranged to treat a scene with a green foreground and a red sunset in the background. A wide number of similar combinations is rendered possible by this device as will be appreciated by persons skilled in the art.

Since the embodiment of the invention here shown is subject to numerous modifications, and since other embodiments are possible, which do not differ from the spirit of the invention, it is desired that the description thereof be considered as illustrative merely and that the scope of the invention be limited only by the claims hereinafter presented.

I claim as my invention:

1. The combination with a projection apparatus comprising a body, a lens at the front of the body, a lens plate for carrying the lens and means for attaching the lens plate to the body, of a bifurcated bracket having feet adapted to be placed under a pair of said attaching means and be clamped thereby to the lens plate, a perforated lug on the outer end of the bracket, a bearing member mounted in the lug, and a ray screen adapted to be mounted on the bearing member in operative relation with the lens.

2. The combination with a projection apparatus comprising a body, a lens at the front of the body, a lens plate carrying the lens and cap screws for attaching the lens plate to the body, of a bifurcated bracket having feet adapted to be placed under a pair of said cap screws and be clamped thereby to the lens plate, said bracket having a perforated lug on its outer end arranged parallel to the feet, a bearing shaft mounted in the lug with its axis in the horizontal plane of the axis of the lens, and a circular vari-colored ray screen adapted to be rotatably and reversibly mounted on the shaft in operative relation to the lens.

JOSEPH F. MERKEL.