US 20040174271A1

(19) United States

(12) Patent Application Publication (10) Pub. No.: US 2004/0174271 A1

Welles, II et al. (43) Pub. Date: Sep. 9, 2004

(54) AUTOMATIC METER READING SYSTEM USING LOCALLY COMMUNICATING UTILITY METERS

(76) Inventors: **Kenneth Brakeley Welles II**, Scotia, NY (US); **Wolfgang Daum**, Louisville, KY (US)

Correspondence Address:
GENERAL ELECTRIC COMPANY
GLOBAL RESEARCH
PATENT DOCKET RM. BLDG. K1-4A59
SCHENECTADY, NY 12309 (US)

(21) Appl. No.: **10/804,352**

(22) Filed: **Mar. 19, 2004**

Related U.S. Application Data

(60) Division of application No. 09/522,383, filed on Mar. 10, 2000, now Pat. No. 6,737,984, which is a continuation-in-part of application No. 09/132,080, filed on Aug. 10, 1998, now abandoned.

(60) Provisional application No. 60/055,904, filed on Aug. 15, 1997.

Publication Classification

(51) **Int. Cl.**[7] **H04M 11/04**

(52) **U.S. Cl.** **340/870.02**

(57) **ABSTRACT**

A low cost frequency shift keying communications system for communication between utility meters within a local area network and for communication with a central database. Transmitters coupled to the utility meters transmit utility meter data measurements over power lines to at least one power line receiver associated with another utility meter within the local area network. The power line receiver communicates the data measurements from each utility meter to the central database via telephone or radio frequency transmitter.

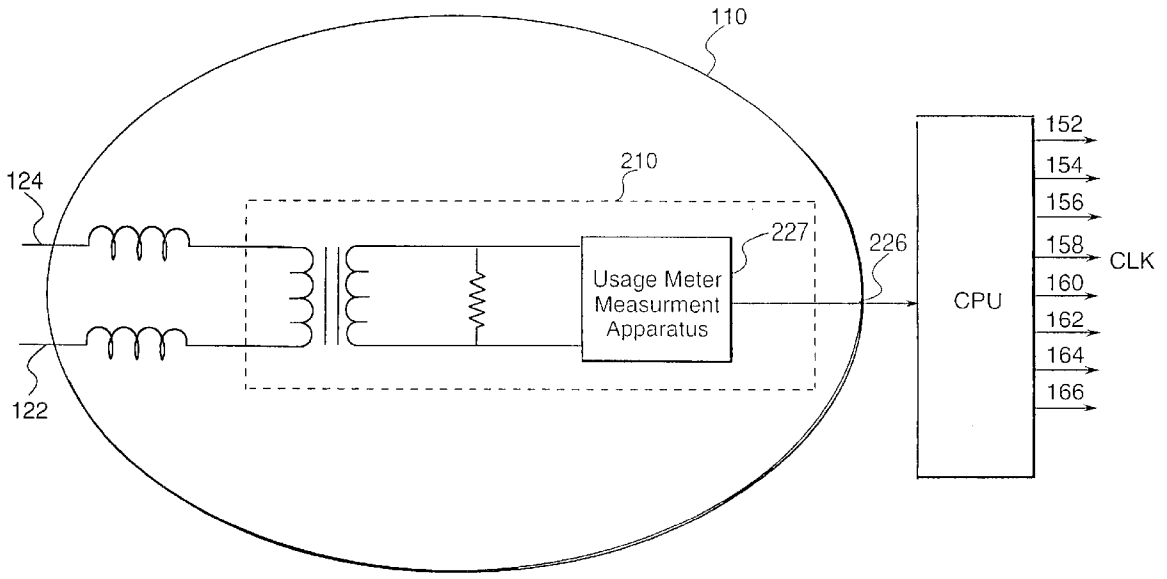

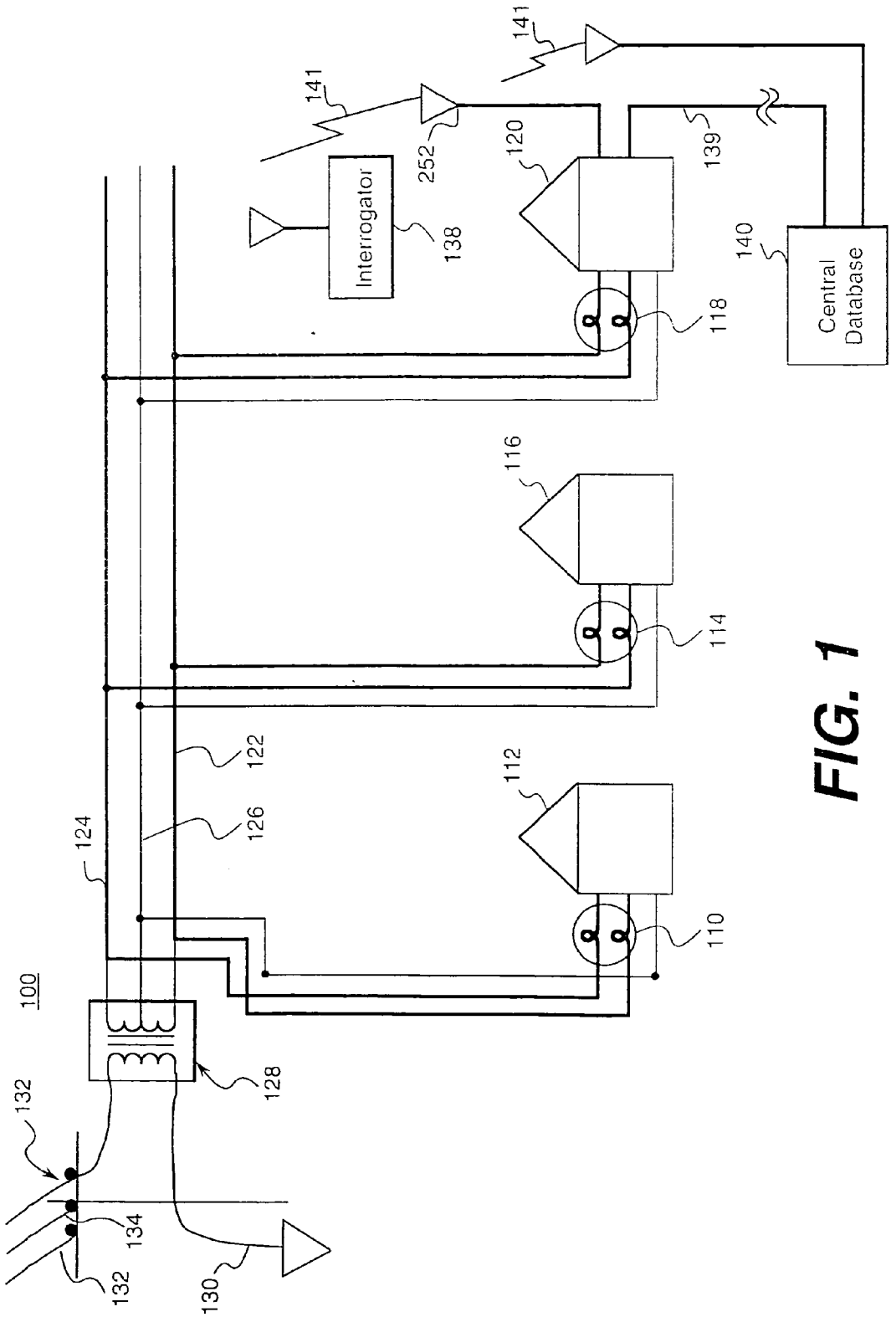
141
141
252
120
139
Interrogator
138
140
Central Database
118
116
114
122
126
124
112
110
100
128
132
134
132
130

FIG. 1

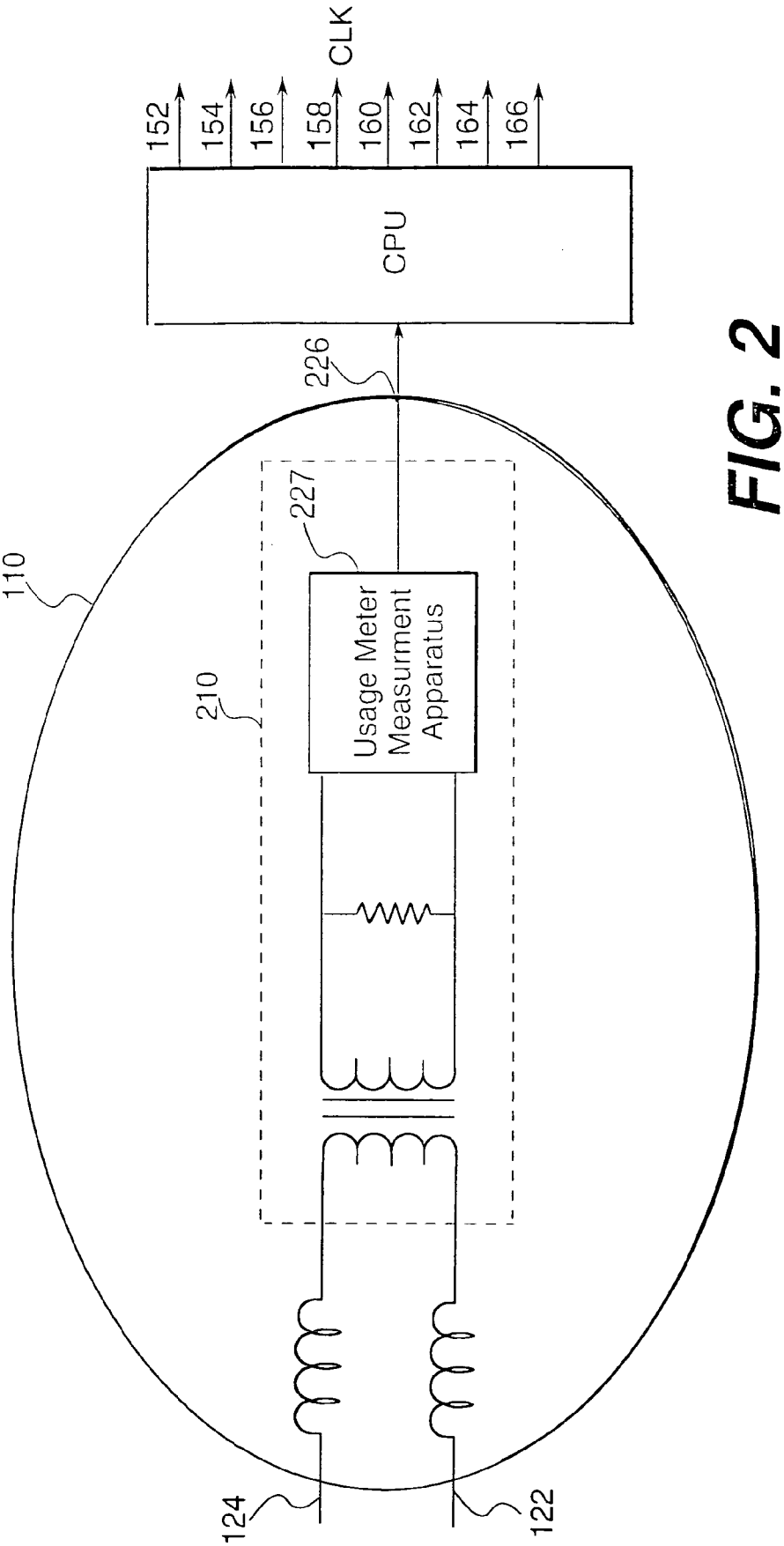
CLK
152
154
156
158
160
162
164
166
CPU
226
227
110
210
Usage Meter Measurment Apparatus
124
122

FIG. 2

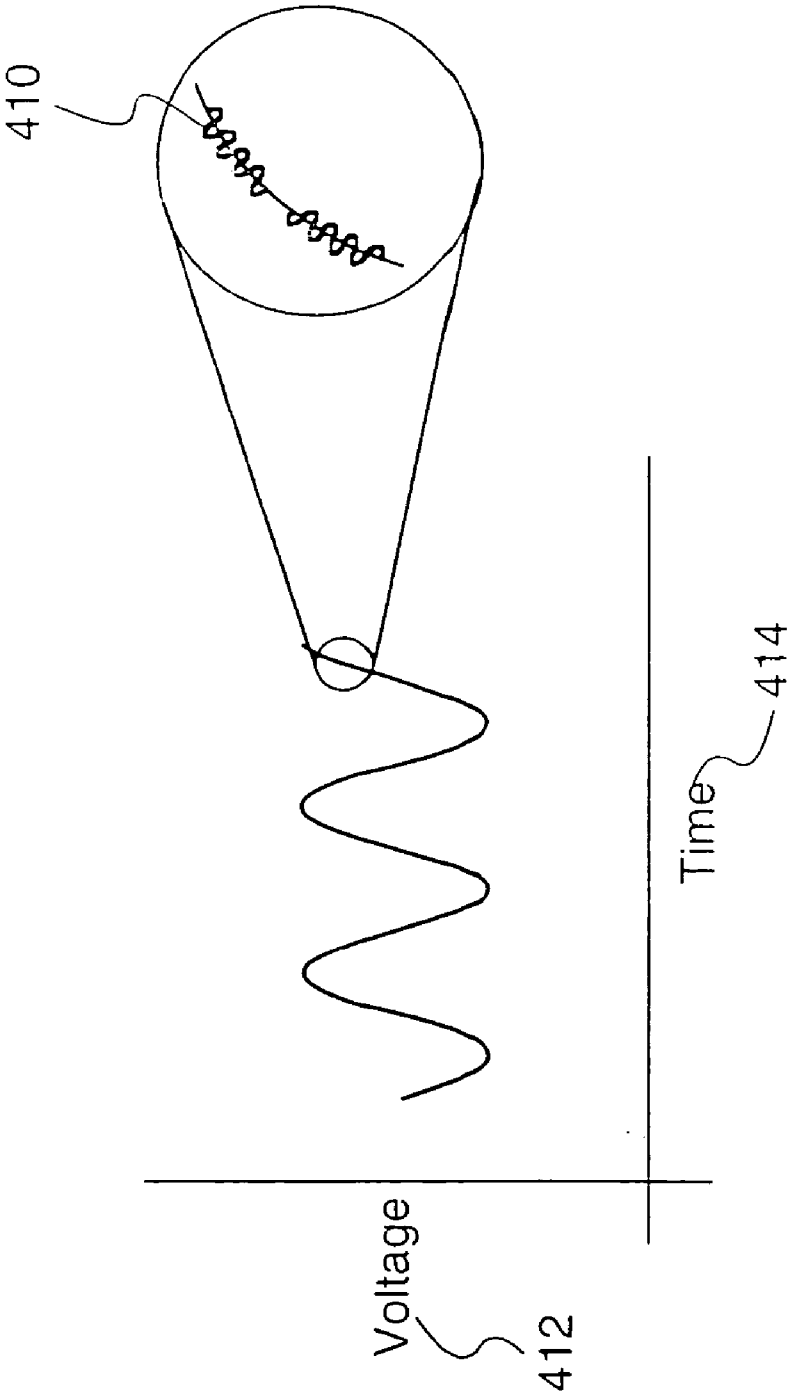

FIG. 3

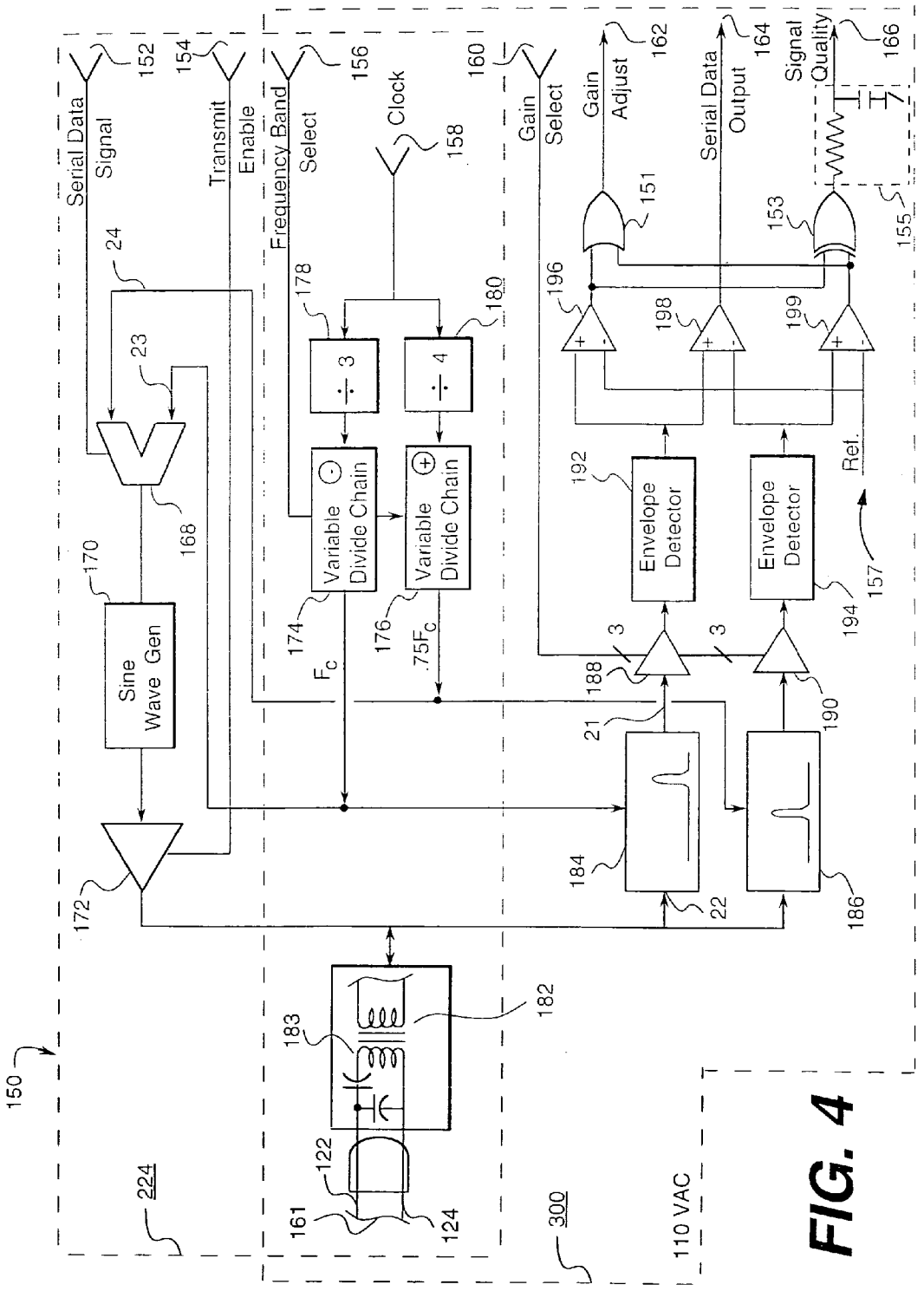
Serial Data Signal
152
154
Transmit Enable
Frequency Band Select
156
Clock
158
160
Gain Select
Gain Adjust
162
Serial Data Output
164
Signal Quality
166
151
153
155
24
23
168
170
Sine Wave Gen
172
178
180
÷ 3
÷ 4
Variable Divide Chain
Variable Divide Chain
174
176
F_c
$.75F_c$
196
198
199
192
Envelope Detector
Envelope Detector
194
Ref.
157
3
3
188
190
21
184
22
186
182
183
122
161
124
150
224
300
110 VAC

FIG. 4

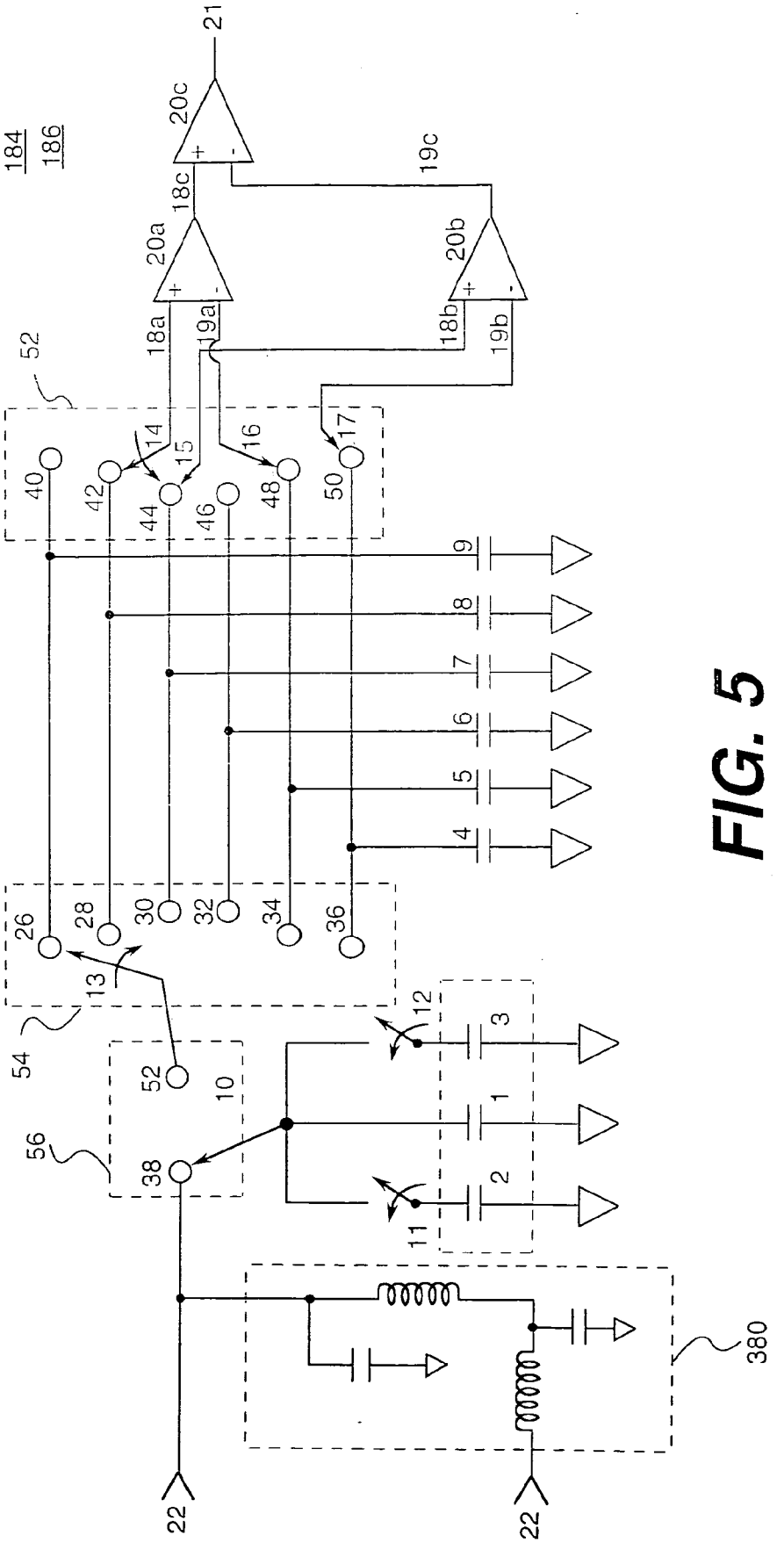
184
186
21
20c
19c
18c
20a
20b
18a
19a
18b
19b
52
14
15
16
17
40
42
44
46
48
50
9
8
7
6
5
4
26
28
30
32
34
36
13
12
3
1
2
54
52
10
56
38
11
380
22
22

FIG. 5

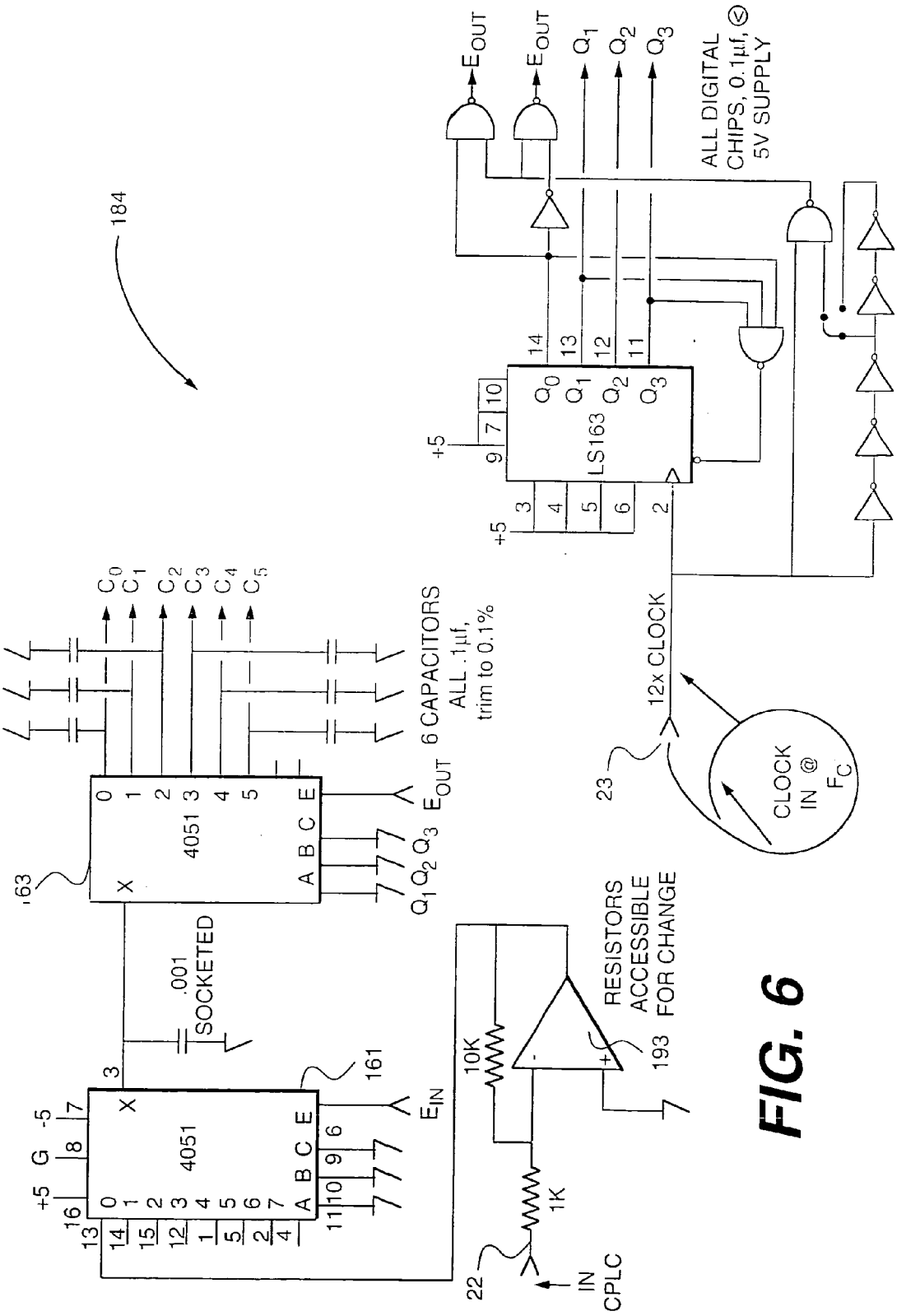
184
E_{OUT}
E_{OUT}
Q_1
Q_2
Q_3
ALL DIGITAL CHIPS, 0.1µf, ⊗ 5V SUPPLY
LS163
Q_0 Q_1 Q_2 Q_3
+5
+5
12x CLOCK
23
CLOCK IN @ F_C
C_0 C_1 C_2 C_3 C_4 C_5
6 CAPACITORS ALL .1µf, trim to 0.1%
4051
E_{OUT}
Q_1 Q_2 Q_3
.001 SOCKETED
161
E_{IN}
4051
+5 G -5
10K
1K
22
IN CPLC
RESISTORS ACCESSIBLE FOR CHANGE
193

FIG. 6

FIG. 7

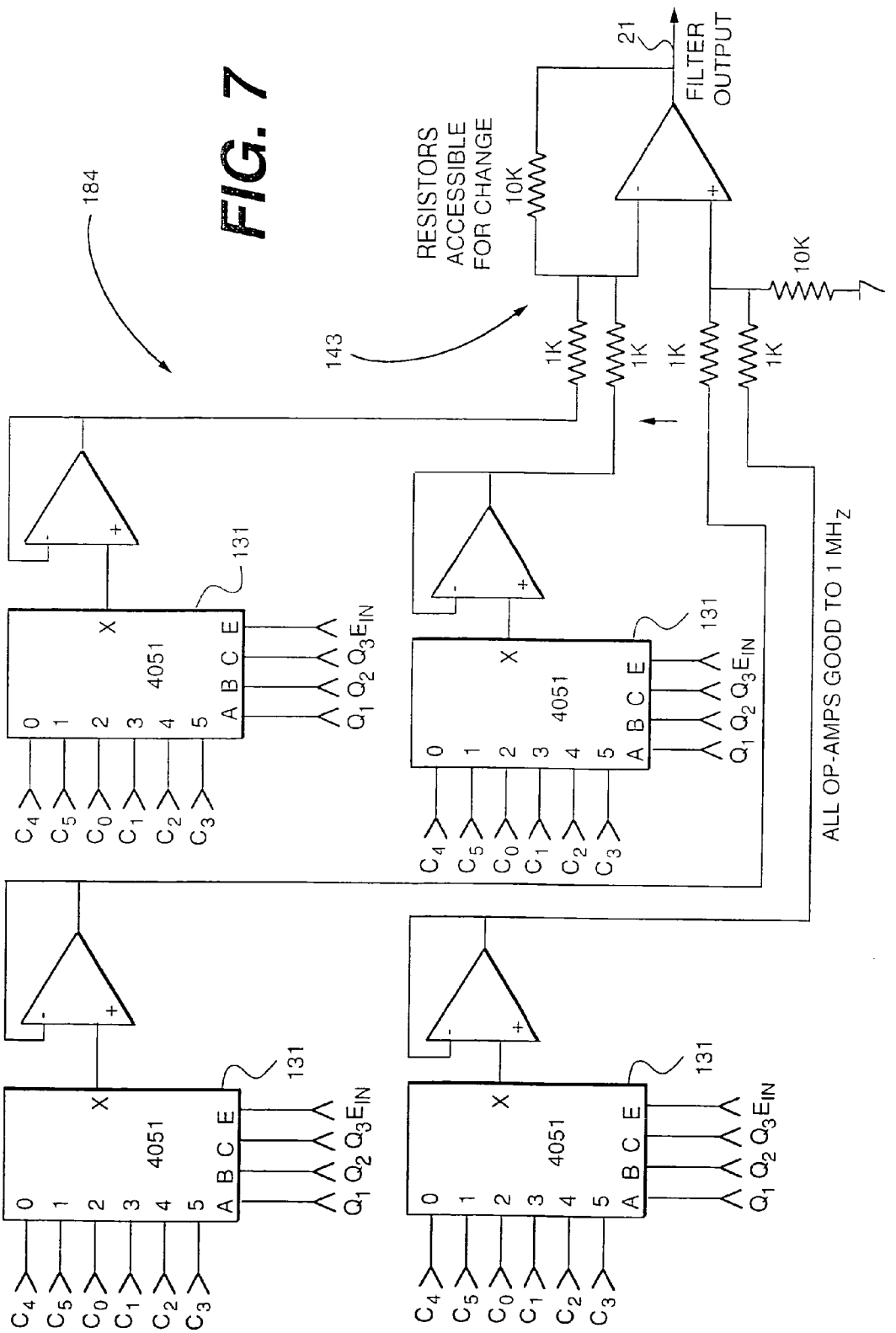
184
143
RESISTORS ACCESSIBLE FOR CHANGE
10K
21
FILTER OUTPUT
1K
1K
1K
1K
10K
131
4051
X
A B C E
0 1 2 3 4 5
C_4 C_5 C_0 C_1 C_2 C_3
Q_1 Q_2 Q_3 E_{IN}
ALL OP-AMPS GOOD TO 1 MHz

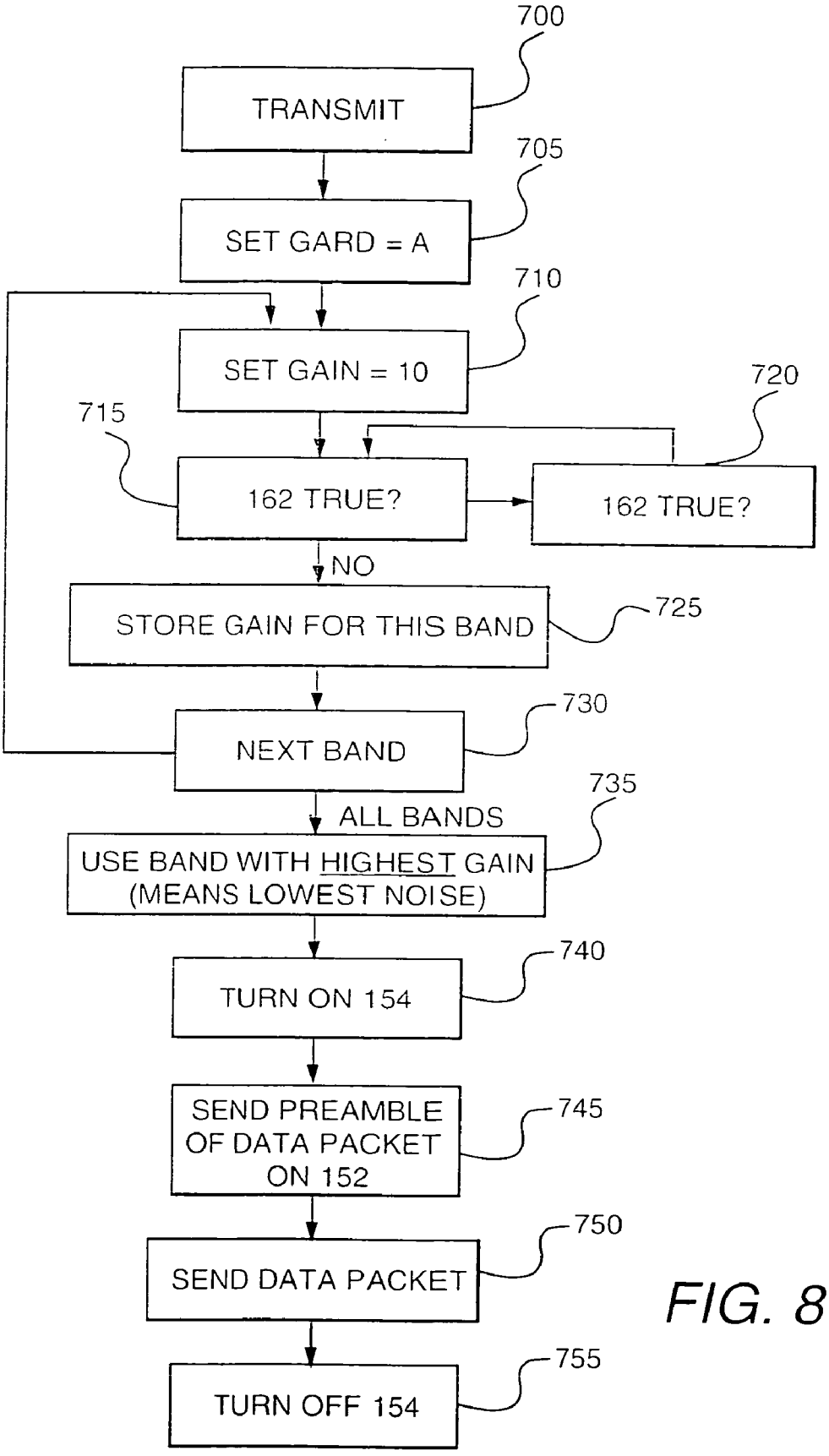
700
TRANSMIT
705
SET GARD = A
710
SET GAIN = 10
720
715
162 TRUE?
162 TRUE?
NO
STORE GAIN FOR THIS BAND
725
730
NEXT BAND
735
ALL BANDS
USE BAND WITH HIGHEST GAIN
(MEANS LOWEST NOISE)
740
TURN ON 154
745
SEND PREAMBLE
OF DATA PACKET
ON 152
750
SEND DATA PACKET
755
TURN OFF 154

FIG. 8

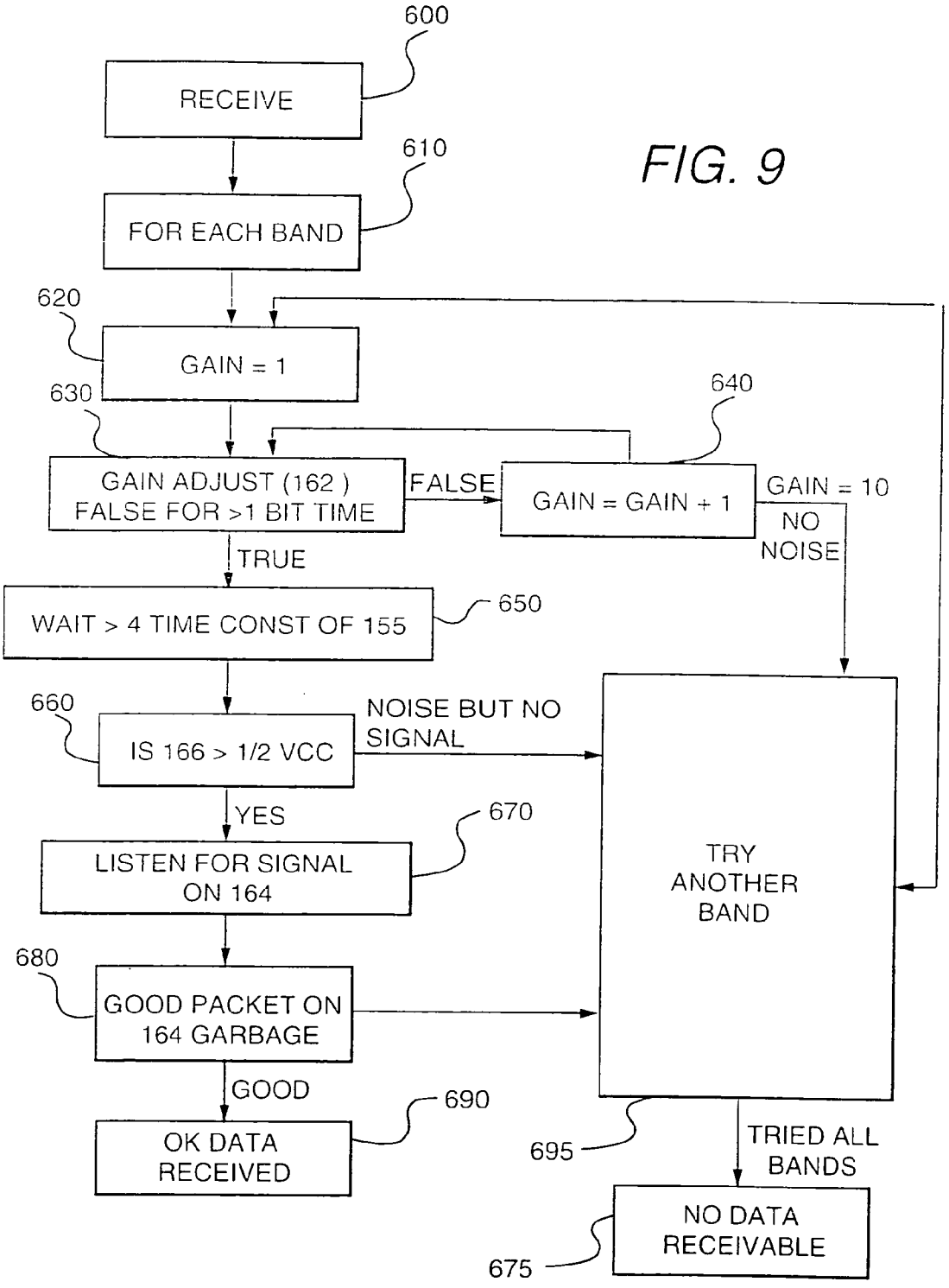
600
RECEIVE
610
FOR EACH BAND
620
GAIN = 1
630
640
GAIN ADJUST (162)
FALSE FOR >1 BIT TIME
FALSE
GAIN = GAIN + 1
GAIN = 10
NO
NOISE
TRUE
WAIT > 4 TIME CONST OF 155
650
660
IS 166 > 1/2 VCC
NOISE BUT NO
SIGNAL
YES
670
LISTEN FOR SIGNAL
ON 164
680
GOOD PACKET ON
164 GARBAGE
GOOD
690
OK DATA
RECEIVED
TRY
ANOTHER
BAND
695
TRIED ALL
BANDS
NO DATA
RECEIVABLE
675

FIG. 9

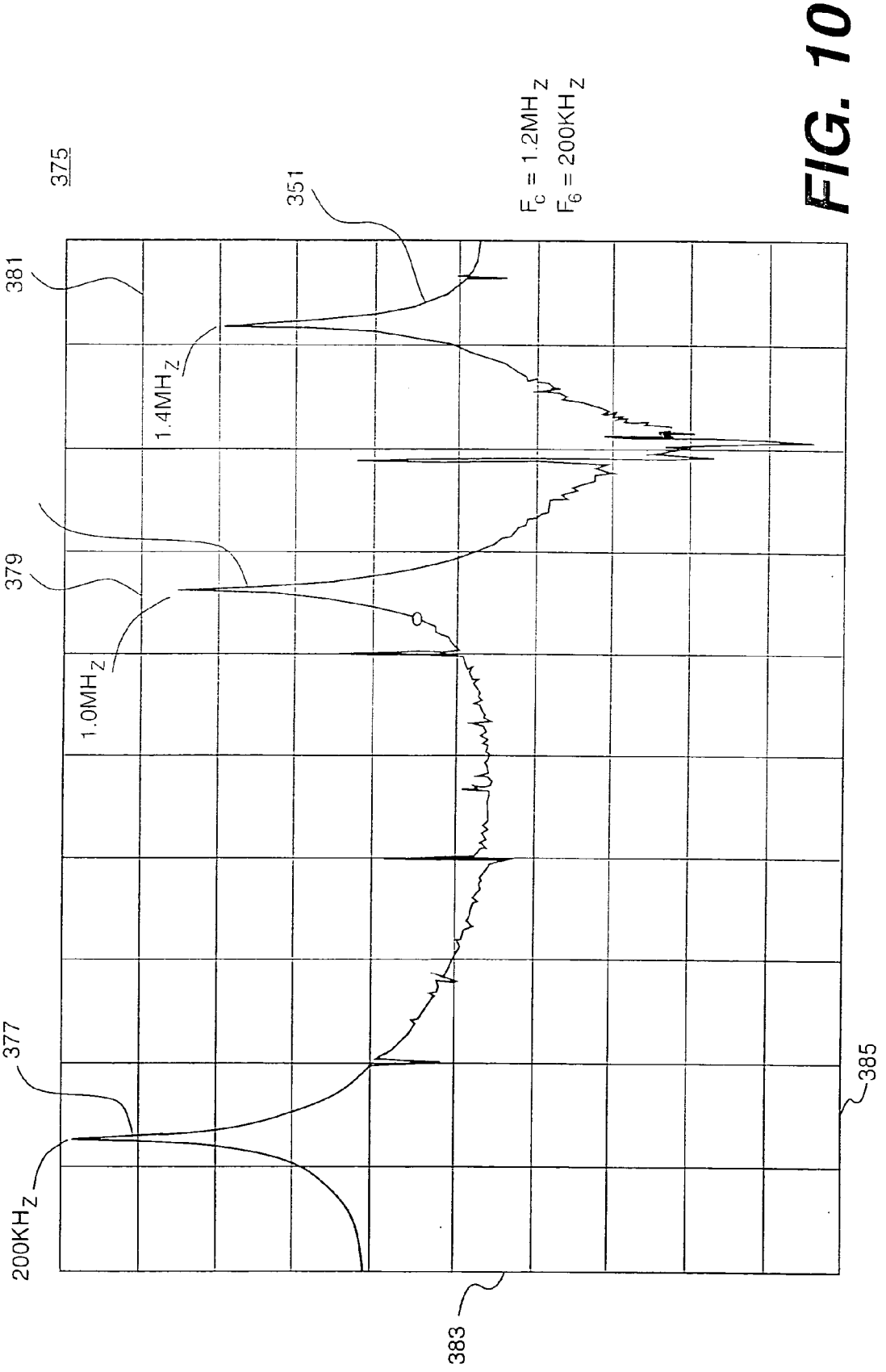
375
351
F_c = 1.2MHz
F_6 = 200KHz
381
1.4MHz
379
1.0MHz
377
200KHz
385
383

FIG. 10

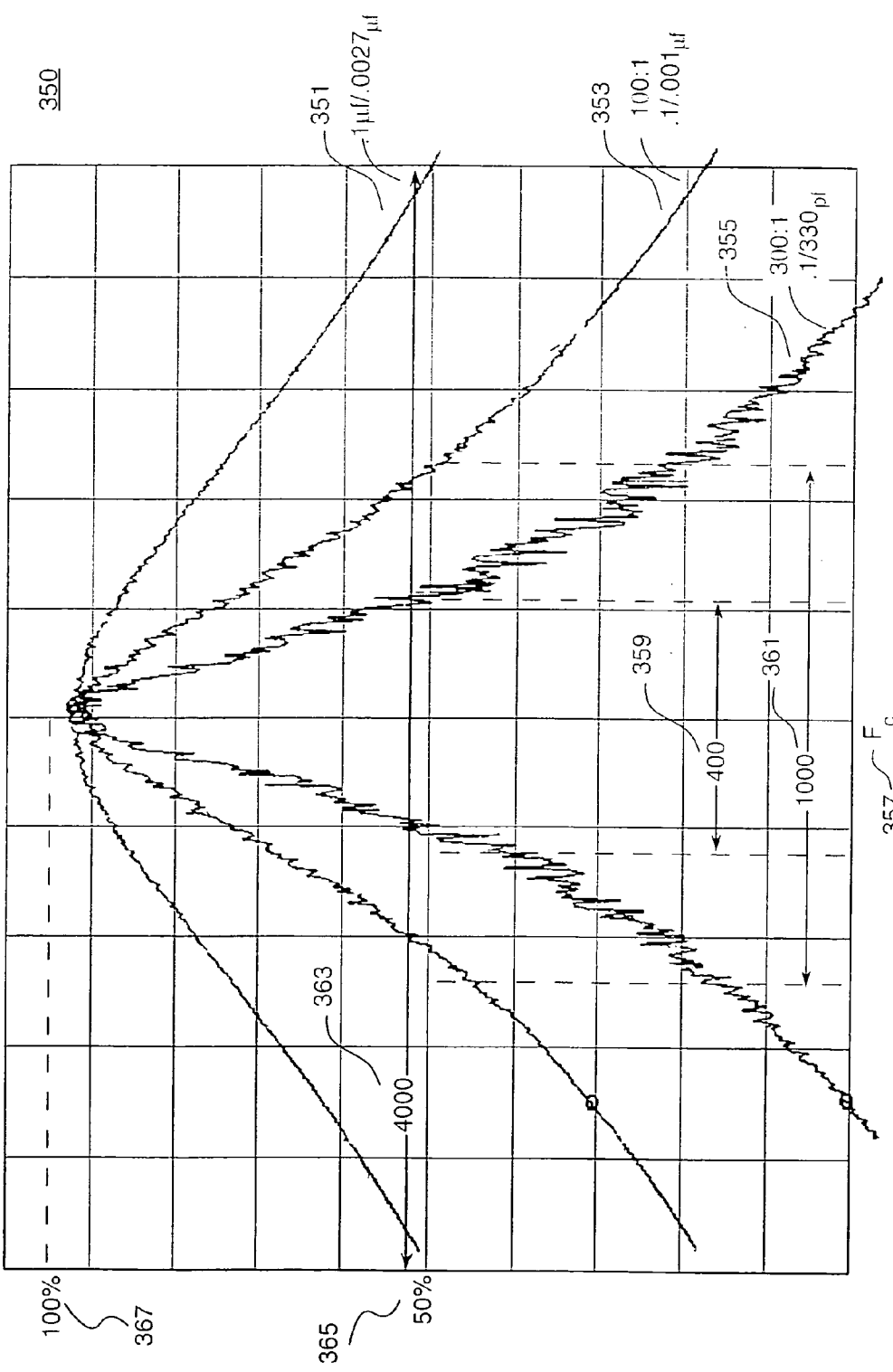
350
351
1μf/.0027μf
353
100:1
.1/.001μf
355
300:1
.1/330pf
359
361
400
1000
357
Fc
363
4000
100%
367
365
50%

FIG. 11

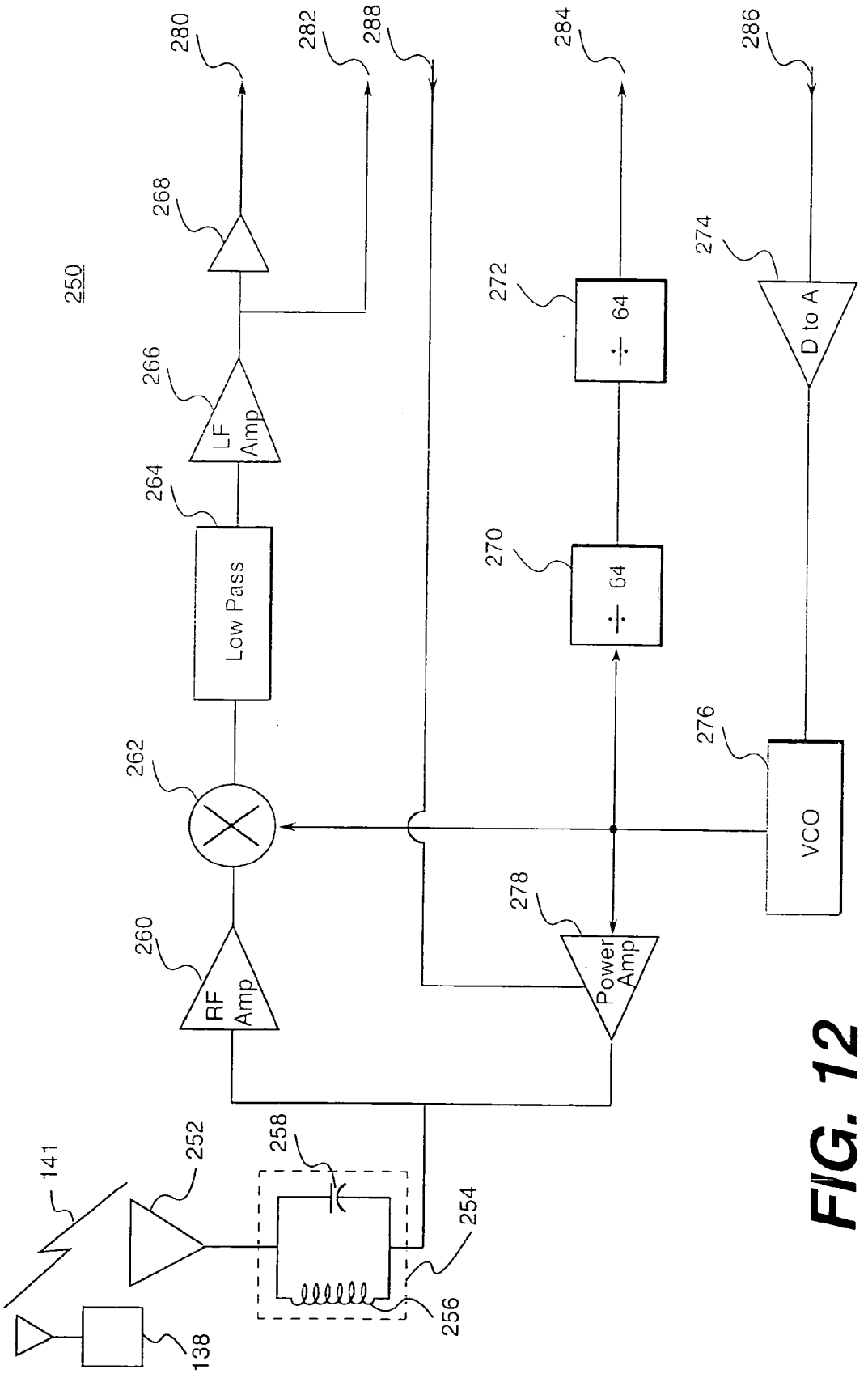
250
280
282
288
284
286
268
274
272
÷ 64
D to A
266
LF Amp
264
Low Pass
270
÷ 64
262
276
VCO
260
RF Amp
278
Power Amp
141
252
258
254
256
138

FIG. 12

AUTOMATIC METER READING SYSTEM USING LOCALLY COMMUNICATING UTILITY METERS

CROSS REFERENCE TO RELATED APPLICATIONS

[0001] This Application is a Division of Ser. No. 09/522,383, filed Mar. 10, 2000, which is a Continuation In Part of application Ser. No. 09/132,080 filed Aug. 10, 1998 which claims the benefit of U.S. Provisional Application No. 60/055,904 filed Aug. 15, 1997.

BACKGROUND OF THE INVENTION

[0002] This invention relates to a power line communication system, and more particularly to a power line communication system utilizing a local area network to relay utility usage data to a transmitting meter for transmission to a central database.

[0003] A power line communication system typically transmits and receives data over standard electrical house type wiring. An example of such a system is the remote intercom system using electrical wiring within a building to communicate data between the transmitter and receiver. A system such as this does not communicate with an external database, nor does it communicate between two or more buildings.

[0004] Utility meter communication systems exist that communicate with a central database by way of a radio frequency transmitter. For example, U.S. Pat. No. 5,495,239 discloses a system in which utility meter electronics communicate with a remote interrogator in a vehicle as it approaches the utility meter in a building. Additionally, utility meter communication systems exist which are able to communicate via telephone with a central database as is disclosed, for example, in U.S. Pat. No. 4,833,618. Utility meters in these utility meter communication systems lack the ability to communicate with one another and consequently, each utility meter must communicate with the central database or mobile interrogator. It would be desirable for utility meters within a utility meter communication network to have the capability of communicating with one another between multiple buildings. Additionally, there exists a need for a power line utility meter communication system with the capability of communicating with other utility meters within a local area network and communicating with a central database.

[0005] Present utility meter communication devices employ several electronic parts which result in a high cost of acquisition and maintenance of the communication module. It is desirable to have a utility meter communications system with relatively few parts that communicates with other utility meters and that can be constructed cheaply, and that require little maintenance.

BRIEF SUMMARY OF THE INVENTION

[0006] The present invention addresses the foregoing needs by providing a power line communications system that enables utility meters to communicate with one another over power lines utilizing a frequency shift keying communication technique to transmit and receive utility usage data from each utility meter so that at least one utility meter within a local area network necessarily communicates with a central database.

[0007] In an exemplary embodiment of the present invention a low cost power line communications system enables utility meters to communicate with one another over power lines utilizing a amplitude modulation communication technique to communicate utility usage data to each utility meter so that any one utility meter within a local area network indirectly communicates with a remote interrogator.

[0008] In a further exemplary embodiment of the present invention a narrow band bandpass filter circuit is employed which enables the power line communication system to select at least one very narrow frequency band within which to communicate utility meter data, thus avoiding noise and other communications pitfalls on the power line.

BRIEF DESCRIPTION OF THE DRAWINGS

[0009] The features of the inventions believed to be novel are set forth with particularity in the appended claims. The inventions both as to organization and method of operation, together with further objects and advantages thereof, may best be understood by reference to the following description in conjunction with the accompanying drawings in which like characters represent like parts throughout the drawings, and in which:

[0010] **FIG. 1** is an illustration of a power line local area network of the present invention.

[0011] **FIG. 2** is a schematic block diagram of an electronic meter power measurement device of the present invention.

[0012] **FIG. 3** is a graphical illustration of the power line voltage wave form with power line communication data superimposed.

[0013] **FIG. 4** is a block diagram of a frequency shift keyed (FSK) communication system of the present invention.

[0014] **FIG. 5** is a schematic diagram of an embodiment of a narrow band pass filter of the present invention.

[0015] **FIGS. 6 and 7** are schematic diagrams of an alternative embodiment of the narrow band pass filter depicted in **FIG. 5**.

[0016] **FIG. 8** is a flowchart depicting the operation of a CPU in transmit mode in accordance with an embodiment of the invention.

[0017] **FIG. 9** is a flowchart depicting the operation a CPU in receive mode in accordance with an embodiment of the invention.

[0018] **FIG. 10** is a graphical illustration of the frequency response of a frequency shift keyed power line communication system of the present invention.

[0019] **FIG. 11** is a graphical illustration of the frequency response of a frequency shift keyed power line transceiver of the present invention at various "Q" values.

[0020] **FIG. 12** is a schematic block diagram of an amplitude modulation utility meter communications module of the invention.

DETAILED DESCRIPTION OF THE INVENTION

[0021] A utility meter communication system **100** is described wherein a plurality of utility customers, e.g., **112**,

116 and 120, each having corresponding utility meters on the secondary side of a distribution transformer 128 have the ability to communicate with one another via a power line communication system within a "local area network," as is illustrated in FIG. 1. For purposes of this specification a "customer" refers generally to a consumer of a utility, such as electricity, which consumption is monitored and measured by means of a utility meter. The term "customer" refers more specifically to a building housing devices which consume a utility such as electricity to operate. Customers include residential buildings as well as commercial buildings. Examples of utilities include, but are not limited to, electricity, gas and water. Reference to a "local area network" in this specification identifies a set of utility meters having the capability of communicating with one another by way of power line cables. For example, power line cable 124 forms a "local area network" communications path between buildings 112, 116, and 120. Power line cable 124, along with meters 110 adapted for communication with each other, thus forms the "local area network" communication path.

[0022] Power line cable 124 cable has a common electrical path at each building 112, 116 and 120. Likewise, power line cables 122 and 126 are in electrical communion at each customer 112, 116, and 120, so as to form a "local area network" communications path. Power line cables 122, 124, and 126 are also each coupled to the secondary side of a distribution transformer 128. Distribution transformer 128 is in electrical communication with a high voltage power line 132, where high voltage power line 132 is typically about 4,000 volts alternating current (VAC). Distribution transformer 128 is also coupled to a ground potential via power line transformer ground 130. Power line cable 126 is the power line neutral. In one embodiment of the invention, a communication path is formed by power lines 122 and 124 (illustrated in FIG. 4). As those of ordinary skill in the art will recognize other configurations of power lines 122, 124 and 126 may be utilized to form a communications path for local area network 100. In the United States, distribution transformer 128 is, typically, in electrical communication with two to ten single family buildings.

[0023] Electric meter 110 is an electric utility meter as illustrated in FIG. 2. Although the invention is described in terms of an electric utility meter, it is important to note that other utility meters may be adapted in accordance with the invention to communicate metered data between buildings via power lines. In the embodiment shown in FIG. 2 power lines 122 and 124 are coupled to meter 110. Meter 110 is configured to include meter usage measurement apparatus 227. For purposes of this specification the term "configured" means equipped with appropriate components, the components operatively arranged, connected and programmed to achieve a specified function. Usage measurement device 210 measures the voltage and current carried by power lines 122 and 124 by means of usage meter measurement apparatus 227. Usage meter measurement apparatus 227 converts this power usage data into a digital signal suitable for use by CPU 900 and provides the digital signal at an output, as indicated at 226. The digital signal comprises utility meter data, for example, an electric meter voltage reading, a current reading, and an identification (ID) code for utility meter 110.

[0024] Digital signal 226 is coupled to a CPU 900. In one embodiment of the invention, CPU 900 resides within utility meter 110. In an alternative embodiment of the invention, CPU 900 resides outside the housing of utility meter 110. CPU 900 is configured to receive digital signal 226 and to convert the utility usage data of signal 126 into a signal 152 having an electronic format suitable for radio frequency transmission over power lines by FSK transceiver 224 (illustrated in FIG. 4). In one embodiment of the invention usage data signal 126 is converted to a packet format, which includes a preamble followed by serial data. Such packet formats are typical of digital communications systems and are well understood by those of ordinary skill in the art.

[0025] In addition to receiving digital signal 226 from meter 110, CPU 900 is configured to receive signals 162, 164 and 166 from FSK power line transceiver 150 (shown in FIG. 4). Based on the signals it receives, CPU 900 provides digital signal 152, along with control signals 154, 156 and 158 and 160 to FSK power line transceiver 150. CPU 900 is programmed in accordance with an algorithm of the invention which is described in detail hereinbelow.

[0026] FSK Transmitter

[0027] FIG. 4 is a block diagram of FSK power line transceiver 150. FSK power line transceiver 150 comprises two sections, FSK power line transmitter 224 and FSK power line receiver 300. FSK power line transceiver 150 is configured to operate in one of two alternative modes, transmit mode and receive mode. FSK power line transmitter 224 comprises multiplexer 168, sine wave generator 170; power amplifier 172; center frequency variable divider 174; non-center frequency variable divider 176; first divider 178; and second divider 180.

[0028] As previously stated, FSK power line transmitter 224 is configured to receive serial data signal 152 from CPU 900. In one embodiment of the invention, modulation of serial data signal 152 is generally carried out employing typical FSK modulation techniques known to those of ordinary skill in the art. However, unlike typical FSK transmitters, transmitter 224 is configured to pre-select optimum frequency pairs to FSK modulate data signal 152 based upon information about the power lines it receives from receiver 300. In other words, transmitter 224 is configured to transmit the meter usage data contained in signal 152 over a respective power line cable 122, 124, or 126 using a pre-selected optimum transmission frequency pair.

[0029] As shown in FIG. 4, multiplexer 168 is coupled to CPU 900 and receives serial data signal 152 from CPU 900. Also coupled to multiplexer 168 are center frequency signal (fc), indicated at 23, and off center frequency signal (0.75 fc) indicated at 24. Signals 23 and 24 comprise the FSK signal pair used to modulate signal 152 prior to transmission. Signals 23 and 24 are generated as follows. A clock signal 158, in one embodiment of the invention the CPU 900 clock running at about 4 MHz, is provided to first divider 178 (divide by 3) and to second divider 180 (divide by 4). The outputs of dividers 178 and 180 are provided to variable divider 174 and variable divider 176, respectively. Also provided to variable dividers 174 and 176 is frequency band select signal 156. Frequency band select signal 156 determines the division factor for dividers 174 and 176 and thus, the frequencies of modulating signals fc and 0.75 fc respectively.

[0030] Center frequency fc and non-center frequency 0.75 fc are coupled to multiplexer 168 where fc and, alternatively,

0.75 fc are coupled to sine wave generator **170** based on the status of serial data signal **152**. If a data bit of serial data signal **152** is a logical one then the fc signal is coupled to sine wage generator **170**. Alternatively, if a data bit on serial data line **152** is a logical zero then the 0.75 fc signal is coupled to sine wave generator **170**.

[**0031**] In one embodiment of the invention sine wave generator **170** generates a sine wave having a frequency about one sixth of the frequency of the signal it receives. As those of ordinary skill in the art will recognize, other frequency division multiples may be selected for sine wave generator **170** depending on, for example, selected data transmission rates and modulation frequencies. Sine wave generator **170** provides an FSK modulated signal having a frequency 0.167 fc or 0.125 fc, depending on the value of the data bit to be transmitted. Sine wave generator **170** is coupled to power amplifier **172**. Also provided to power amplifier **172** is transmit enable signal **154**. When transmit enable signal **154** is activated by CPU **900**, power amplifier **172** provides the amplified FSK modulated signal to coupler **182**. Coupler **182** is a typical power line coupler configured to couple the amplified signal from power amplifier **172** to a respective power line **122**, **124**, or **126**.

[**0032**] FSK Power Line Receiver

[**0033**] FSK power line receiver **300** comprises: band pass filter **186**, which is a non-center frequency, narrow band pass filter; band pass filter **184**, which is a center frequency narrow band pass filter; center frequency variable gain amplifier **188**; non center frequency variable gain amplifier **190**; center frequency envelope detector **192**; non center frequency envelope detector **194**; center frequency power comparator **196**; serial data comparator **198**; non-center frequency power comparator **199**; gain adjust OR gate **151**; signal quality "exclusive OR" ("XOR") gate **153**; and signal quality filter **155**.

[**0034**] Signal lines coupled from FSK power line receiver **300** to CPU **900** include: signal power reference **157**; gain select signal **160**; center frequency fc and non center frequency 0.75 fc. Signal lines coupled to FSK power line receiver **300** comprise: gain adjust line **162**; serial data output signal **164**; and signal quality signal **166**.

[**0035**] When power line transceiver **150** is in transmit mode, CPU **900** directs power line receiver **300** to scan power line cable **161** (comprising, in this embodiment, power lines **122** and **124**), over a plurality of frequency pairs to gather information about the power line at each frequency pair. The information gathered includes information about noise levels on the power line and whether the power line is in use by another transceiver in local area network **100** for radio frequency transmission of data. Receiver **300** is configured to provide this information to CPU **900** via signal quality signal **166**. CPU **900** is programmed to select desirable frequencies for transmission based on signal **166**.

[**0036**] In receive mode FSK power line receiver **300** monitors the output of power line coupler **182** to detect the presence of data from other power line transmitters **224** in the "local area network." When a data signal is detected, FSK power line receiver **300** receives utility meter data on a respective power line **122**, **124**, or **126** and demodulates utility meter data into digital data suitable for reception by CPU **900**. According to one embodiment of the invention CPU **900** then forwards this data to a central database via a telephone link **139** or remote interrogator **138** as illustrated in **FIG. 1**.

[**0037**] Coupler **182** and band pass filter **183** couple data signals from power line **161** to receiver **300**, and specifically to narrow band pass filters **184** and **186**. In addition to desired signals, coupler **182** passes 60 Hertz power signals, noise and other low frequency signals, i.e., those occurring at frequencies below about 10,000 Hertz. Noise and signals at these lower frequencies typically present difficulties for receivers in general. Consequently, a preferred embodiment of the invention utilizes frequency pairs between about 10,000 and about 100,000 Hertz as FSK signaling frequencies. Receiver **300** and CPU **900** are configured such that in the event that receiver **300** detects spurious data or noise in portions of the frequency range from about 10,000 Hertz to about 100,000 Hertz, CPU **900** selects alternative operational frequencies within that range for transmission. Thus transmission via frequencies in which there is spurious data or noise is avoided. Spurious data are defined as data that are not generated by the power line communication system within the local area network.

[**0038**] Although a frequency range of about 10,000 to about 100,000 Hertz is selected as the frequency scan range in receive mode, any frequency scan range may be utilized depending on the electronic data signaling rate and the transmission approach selected. Typically, utility meter signal rates are 100 to 9600 baud depending on the amount of data that needs to be transmitted. In one embodiment of the invention, the preferred data signal rate is in the 100 to 300 baud range since a small number of utility meters communicate in the same local area network.

[**0039**] Center frequency fc and non-center frequency 0.75 fc signals are provided to pass band filters **184** and **186** respectively. Band pass filters **184** and **186** are configured in accordance with the invention to pass only those signals which have a center frequency corresponding to center frequency fc and non center frequency corresponding to non center frequency 0.75 fc. Thus, only utility meter data transmitted at frequencies corresponding to the selected center frequency and non-center frequency are passed by band pass filters **184** and **186** respectively.

[**0040**] In one embodiment of the receive mode configuration of the invention, FSK power line receiver **300** (**FIG. 4**) locks onto signals at a selected frequency upon detecting a valid signal at that frequency. Frequency lock occurs when signal quality line **166** is active, thus indicating a valid signal. Signal quality line **166** is active when the center frequency envelope detector signal generated by center frequency envelope detector **192** is greater than a signal power threshold level as defined by signal power reference **157**, and alternatively, when non-center frequency envelope **194** is below the signal power threshold of signal power reference detector **157**.

[**0041**] The signal quality signal is also active when the following two conditions are met. First, the center frequency envelope detector signal (generated by center frequency envelope detector **192**) is less than a signal power threshold level. The signal power threshold level is defined by signal power reference **157**. Second, when the non-center frequency envelope detector signal generated by non-center frequency envelope detector **194** is greater than signal power

threshold of signal power reference **157**. These two conditions are implemented with signal quality XOR gate **153**. The frequency lock occurs because switched capacitor filters **184** and **186** are adapted to generate signals 180 degrees out of phase with one another when locked onto the FSK power line transmitter frequency. For example, when fc is active 0.75 fc is inactive. Since FSK power line transmitter **224** will transmit either 0.167 fc or 0.125 fc only these two frequencies will be "OFF" and "ON" or correspondingly "ON" and "OFF" respectively at any temporal interval. Thus, serial data output comparator **198** generates the desired serial data output signal when a frequency lock has been identified.

[**0042**] Gain adjust line **162** (**FIG. 4**) is activated to signal the CPU to increase amplifier gain if either the output of center frequency envelope **192** is below power quality reference **157** or if the output of non-center frequency envelope **194** is below signal power reference **157**. The amplifier gain is increased by adjusting upward the gain of center frequency variable gain amplifier **188** and non-center frequency variable gain amplifier **190**. If after several gain adjustments are made through the entire amplification range and no frequency match has occurred, another frequency is selected by the CPU and the frequency matching process described above is repeated.

[**0043**] Table 2 lists an example of fourteen frequencies selected by FSK transceiver **150** at two different clock frequencies, to illustrate one exemplary embodiment of the frequency selection range of the present invention.

[**0044**] Switched Capacitor Narrow Band Pass Filter

[**0045**] Narrow band pass filters **184** and **186** of FSK power line receiver **300** are adapted to scan the frequency spectrum from about 10,000 Hertz to about 100,000 Hertz by sequentially stepping through pairs of pass frequencies within this range. In transmit mode the frequency spectrum is scanned to find a clear frequency pair from which transmitter **224** may transmit utility meter data using FSK modulation. In one embodiment of the invention, narrow band pass filters **184** and **186** are implemented using switched capacitor filters.

[**0046**] Narrow band pass filters **184** and **186**, illustrated in **FIG. 4**, provide signal filtering within a narrow band of frequencies to produce a high "Q" band pass filtering function. For purposes of this specification a narrow band pass filter is a filter having a bandwidth of less than about 10% of its center frequency. In one embodiment of the invention, narrow band pass filters **184** and **186** have bandwidths less that about 1% of their center frequencies. Narrow band pass filters **184** and **186** are further illustrated in the block diagram of **FIG. 5**, and in the schematic diagram of **FIGS. 6 and 7**. In this Specification "Q" is defined as the ratio of the capacitance of capacitor **4** to the capacitance of effective capacitor **23**. The values of these capacitors determine the Q and the bandwidth of filters **184** and **186**. Although only center frequency narrow band pass filter **184** is illustrated in **FIGS. 5, 6** and **7**, it is understood that equivalent circuits are utilized for non-center frequency narrow band pass filter **186** where fc is about 0.75 fc.

$$Q = (\text{capacitance } \mathbf{4})/(\text{effective capacitance } \mathbf{23}) \qquad \text{equation 1}$$

[**0047**] Narrow band pass filter **184** illustrated in **FIG. 5** comprises: switches **11, 12, 52, 54**, and **56**; capacitors **1, 2, 3, 4, 5, 6, 7, 8, 9**; and differential amplifiers **20***a,* **20***b,* and **20***c*. Filter input signal at filter input line **22** and center frequency signal fc are coupled to narrow band pass **184** (**FIG. 4**). Correspondingly, filter input signal at filter input line **22** and non-center frequency signal 0.75 fc are coupled to capacitor filter **186**. Narrow band pass filter **184** generates filter output signal at narrow band pass filter line **21**.

[**0048**] Switch **56**, illustrated in **FIG. 5**, comprises a single pole double throw switch having pole **10** and having terminals **38** and **52**. Switch **54** is a single pole six through rotary switch having pole **13** and having six terminals including terminals **26, 28, 30, 34**, and **36**. Switch **52** is a **4** pole six terminal switch comprises poles **14, 15, 16**, and **17**; and also having terminals **40, 42, 44, 46, 48**, and **50**. Note that the switches identified in this Specification, including switches **11, 12, 52, 54**, and **56**, may comprise electronic switches. For example, switches **11, 12, 52, 54**, and **56** comprise electronic functions generated by electronic gate "4051"®, produced by National Semiconductor.

[**0049**] **FIG. 6** illustrates an embodiment of the invention wherein narrow band pass filter **184** is implemented using electronic switches. In the embodiment shown in **FIG. 6** and **7**, National Semiconductor analog multiplexers type CD **4051** are utilized to implement switches **11, 12, 52, 54** and **56**.

[**0050**] Narrow band pass filters **184** and **186** generate a high "Q" signal, i.e., narrow band pass narrow band filter output signal at narrow band pass filter line **21**. One example frequency response of narrow band pass filter **184** is graphically illustrated in **FIG. 10**. The narrow band filter output signal is attenuated by the manner in which the voltage of filter input signal is coupled to capacitors **4** through **9** and summed by differential amplifiers **20***a,* **20***b,* and **20***c,* as is described below.

[**0051**] Switch **56** (**FIG. 5**) is coupled to filter input line **22** so as to charge effective capacitor **23**. The effective capacitance of capacitor **23** may be changed by opening or closing switches **11** and **12**. There are four possible capacitance value combinations of effective capacitance **23**, as is illustrated in Table 1. The capacitance of capacitors **4** through **9** are closely matched and therefore substantially the same. For example, any capacitor **4** through **9** has a capacitance value within one percent of any other respective capacitor **4** through **9**. "Q", as defined by equation **1**, is a value that represents the ratio of the capacitance of capacitor **4** to the capacitance of effective capacitance **23**. For example, when capacitors **1** through **3** are about 0.1 μF and capacitors **4** through **9** are about 0.001 μF, "Q" is about 100.

TABLE 1

Effective Capacitance 23 equations		
Switch 11	Switch 12	Capacitance 23
Off	Off	C1
Off	Off	C1 + C3
On	Off	C1 + C2
On	On	C1 + C2 + C3

[**0052**] Switch **56** enables effective capacitor **23** to be charged by the filter input signal at filter input line **22** while pole **10** is coupled to terminal **38** and subsequently couples

the charge in effective capacitor **23** to switch **54** while switch **56** is coupled to terminal **52**. Pole **10** transitions from terminal **38** to terminal **52** during each interval when pole **13** is coupled to a terminal selected from the group **40**, **42**, **44**, **46**, **48**, and **50**, so as to transfer the charge proportional to the filter input signal from filter input signal line **22** to capacitors **4** through **9**. For example, during time interval ⅙th fc, pole **10** is coupled to each respective terminal **38** and **52** for about ½ of the interval. It is noted that the duty cycle of switch **56** may be varied to maximize the charge transfer efficiency from effective capacitor **23** to capacitors **4**, **5**, **6**, **7**, **8**, and **9**. Switch **13** is coupled to respective terminals **26**, **28**, **30**, **32**, **34**, and **36** at frequency fc, that is, each of the terminals **26**, **28**, **30**, **32**, **34**, and **36** is contacted by pole **13** for about ⅙th of frequency fc. Consequently, capacitors **4** through **9** are charged by the voltage level proportional to sequential portions of the time varying filter input voltage. Again, by way of example, when the filter input signal is a sine-wave having a frequency fc, capacitor **4** has a negligible charge, capacitors **5** and **6** each have a positive charge, capacitor **7** has a negligible charge, and capacitors **8** and **9** have a negative charge, after temporal period 1/fc. As such the voltage levels of capacitors **4**, **5**, **6**,**7**, **8**, and **9** are proportional to the time varying voltage level of the filter input signal after a time interval 1/fc.

[**0053**] The following rules limit the operation of poles **14** through **17** as related to pole **13** and terminals **40**, **42**, **44**, **46**, **48**, and **50** of switches **52** and **54**, as illustrated in **FIG. 5**. Poles **14**, **15**, **16**, and **17** are simultaneously coupled to any four terminals from the group **40**, **42**, **44**, **46**, **48**, and **50** at any given temporal instant, with the following limitations: poles **14** and **15** are coupled to terminals adjacent to one another; poles **16** and **17** are coupled to terminals adjacent to one another; and poles **15** and **16** are coupled to terminals separated by a single terminal. Next, poles **14** through **17** rotate about terminals within group **40**, **42**, **44**, **46**, **48**, and **50** at frequency fc, and also have the following limitations. Pole **14** trails pole **13** by single terminal as pole **13** rotates about terminals **26**, **28**, **30**, **32**, **34**, and **36** at frequency fc. For example, when pole **13** is coupled to terminal **26** pole **14** is coupled to terminal **42**. It is also noted that: terminal **26** is electrically the same point as terminal **40**; terminal **28** is electrically the same point as terminal **42**; terminal **30** is electrically the same point as terminal **44**; terminal **32** is electrically the same point as terminal **46**; terminal **34** is electrically the same point as terminal **48**; and, terminal **36** is electrically the same point as terminal **50**.

[**0054**] Pole **14** is coupled to positive differential terminal **18***a* of differential amplifier **20***a*. Pole **15** is coupled to the positive differential terminal **18***b* of differential amplifier **20***b*. Pole **16** is coupled to negative differential terminal **19***a* of differential amplifier **20***a*. Pole **17** is coupled to negative differential terminal **19***b* of differential amplifier **20***b*. The signals at lines **18***c* and **19***c*, which are generated by of differential amplifiers **20***a* and **20***b*, are summed by amplifier **20***c* and, consequently, narrow band filter output signal is generated on narrow band pass filter line **21**.

[**0055**] The above described connections enable narrow band pass filter **184** to have a high "Q" response. If the frequency of the filter input signal at filter input line **22** is substantially the same as fc the differential summation at amplifiers **20***a*, **20***b* and **20***c* will be maximized. Positive voltage levels at positive terminals **18***a* and **18***b* will be added and the negative voltage levels at negative terminals **19***a* and **19***b* will be subtracted, generating a large narrow band filter output signal. To the degree the filter input signal is not substantially the same frequency as fc narrow band filter output signal will be at a lower magnitude than narrow band filter output signal at frequency fc. For example, if the filter input signal frequency is two times the frequency of fc, charge on capacitors **5**, **6**, **8**, and **9** after being charged with the filter input signal will be near zero. Consequently, the output of differential amplifier **20***a* will be at a lower magnitude because the signals at positive terminal **18***a* will be subtracted from the positive signals at negative terminal **19***a*, thus resulting in a lower magnitude narrow band output filter signal on line **21** than the narrow band output filter signal magnitude at frequency fc.

[**0056**] Narrow band pass filters **184** and **186** enable FSK power line transceiver **150** to monitor selected narrow frequencies on a power line **122**, **124**, or **126**, so as to avoid most spurious data and noise. Narrow band pass filters **184** and **186** are programmable to selected frequencies in the range from about 10,000 Hertz to about 100,000 Hertz dependent upon the frequency of clock signal line **158**, as illustrated in Table **2**. Although a frequency range of about 10,000 to about 100,000 Hertz is selected as the frequency sweep range, any frequency sweep range may be selected depending on frequency fc and the transmission approach selected.

[**0057**] In one exemplary embodiment narrow band pass filter **184** generated a maximized narrow band filter output signal at fc and had a narrow band pass region around this center frequency fc, as illustrated in the graphical representation of the frequency response of narrow band pass filter **184** in **FIG. 7**. When the ratio of capacitor **4** to capacitor **23** was selected to be about thirty-seven (**351** of **FIG. 7**) the frequency range at 6 dB attenuation was about 2800 Hz (**363**); when the ratio of capacitor **4** to capacitor **23** was selected to be about one-hundred (**353**), the frequency range at 6 dB attenuation was about 1200 Hz (**361**); and when the ratio of capacitor **4** to capacitor **23** was selected to be about three-hundred (**355**) the frequency range at 6 dB attenuation was about 600 Hz (**359**). It is notable that as "Q" was increased the band pass region narrowed. The horizontal axis in **FIG. 7** is represented by the frequency and the vertical axis is represented by the gain in decibels (dB).

TABLE 2

Clock (158)	Band Select (156)	Received Center Frequency	Received Non-Center Frequency
4 MHz	4	55.56 KHZ	41.63 KHZ
4 MHz	5	44.44 KHZ	33.33 KHZ
4 MHz	6	37.04 KHZ	27.78 KHZ
4 MHz	7	31.75 KHZ	23.81 KHZ
4 MHz	9	24.69 KHZ	18.52 KHZ
10 MHz	6	92.59 KHZ	69.44 KHZ
10 MHz	7	79.37 KHZ	59.52 KHZ
10 MHz	8	69.44 KHZ	52.08 KHZ
10 MHz	9	61.73 KHZ	46.30 KHZ
10 MHz	10	55.56 KHZ	41.67 KHZ
10 MHz	11	50.51 KHZ	37.88 KHZ
10 MHz	13	42.74 KHZ	32.05 KHZ
10 MHz	14	39.68 KHZ	29.76 KHZ
10 MHz	15	37.04 KHZ	27.78 KHZ

[**0058**] It is also noteworthy that narrow band pass filter **184** generated peak frequencies at center frequency **377**,

fifth harmonic **379**, and seventh harmonic **381**, as is graphically shown in the frequency response plot **(351)** of narrow band pass filter **184**, as illustrated in **FIG. 6**. The third harmonic is eliminated by this design. The horizontal axis in **FIG. 6** is divided into units of frequency and the vertical axis is divided into units of gain in decibels (dB). Center frequency **377** was about 200 KHZ, fifth harmonic **379** was about 1.0 MHz, and seventh harmonic **381** was about 1.4 MHz Hertz. Although it is possible for unwanted frequencies to be amplified by narrow band pass filter **184** at the fifth and seventh harmonic, these frequencies may be blocked in other ways since they occur at substantially higher frequencies than the center frequency. For example, fifth harmonic **379** and seventh harmonic **381** may be filtered by an external filter **380** (see **FIG. 5**).

[**0059**] It is further noteworthy that center frequency fc and non center frequency 0.75 fc are independent of the value of "Q." As discussed above, "Q" is dependent on the capacitance of effective capacitor **23**. Center frequency fc and non center frequency 0.75 fc each is also independent of the capacitance variability of matching capacitors **5** through **9**.

[**0060**] **FIG. 6** and **6** illustrate an embodiment of filter **184** implemented with analog multiplexers. As shown in **FIG. 6**, signal fc is provided to the clock input of counter **137**. The outputs Eout, Ein, Q1, Q2, and Q3 are coupled to the A, B, C and E inputs of multiplexers **4051**. Input signal **22** is coupled from the output of coupler **182** (shown in **FIG. 4**) to the negative input of operational amplifier **193**. The output of operational amplifier **183** is coupled to an input of multiplexer **161**. In the embodiment of the invention shown multiplexer **161** as well as multiplexers **131** are CD **4051** mulitplexers. The output x of multiplexer **161** is provided to the input x of multiplexer **163**. Outputs C**0** through C**5** of multiplexer **163** are provided to inputs **0-5** of multiplexers **131** as follows. For a first multiplexer **131**, C**0** through C**5** are connected to inputs **5,0,1,2,3** and **4**. For a second multiplexer **131** C**0** through C**5** are connected to inputs **4,5,0,1,2**,and **3**. For a third multiplexer **131** C**0** through C**5** are connected to inputs **2,3,4,5,0** and **1** respectively, and for a fourth multiplexer **131** outputs C**0** through C**5** are connected to inputs **1,2,3,4,5** and **0** respectively, as shown in **FIG.7**. The outputs of multiplexers **131** are combined at operational amplifier **143**. The output of operational amplifier **143** corresponds to signal **21** shown in **FIG.4**. Signal **21** is the output of band pass filter **184**.

[**0061**] The CPU used in FSK transceiver **150** may be the same CPU utilized by the electronic meter. Alternatively, the CPU may be dedicated to FSK power line transmitter **224** **(FIG. 4)** or FSK power line receiver **300**. Alternatively, the CPU may be dedicated to FSK power line transceiver **150**. The CPU used in this invention is also coupled to the central data base **140** via either a telephone link **134** or a radio frequency link **141** to communicate utility meter **100** data to central database **140** **(FIG. 1)**.

[**0062**] CPU in Transmit Mode

[**0063**] **FIG. 8** is a flowchart describing the operation of CPU **900** while FSK transceiver **224** is operating in transmit mode. First, CPU **900** scans power line cable **122** to determine a clear channel for transmission of serial data signal **152**. For purposes of this specification the term "scan" means to examine successive portions of a frequency spectrum. The term "clear channel" means a frequency band comprising at least one frequency, the band having noise and signal levels associated therewith sufficiently low as to enable successful transmission of serial data signal **152** thereover. For FSK transmissions, a channel includes a frequency pair.

[**0064**] To perform the step of scanning, CPU **900** listens to, i.e., tunes in, the output of power line coupler **182** at a first selected frequency band as described in steps **700** and **705**. To accomplish step **705**, CPU **900** provides a frequency band select signal **156** to variable dividers **174** and **176** of transmitter **150**. Frequency band select signal **156** sets the division factor for variable dividers **174** and **176**. The division factor set by signal **156** causes dividers **174** and **176** to divide clock signal **158** by the appropriate factor to produce frequency pair fc and 0.75 fc at the first selected frequency band. Frequency pair fc and 0.75 fc are provided to band pass filters **184** and **186**, thereby setting the receive frequency band of the filters to the first selected frequency band.

[**0065**] To accomplish step **710**, CPU **900** initially sets gain select signal **160** to its highest gain setting according to step **710**. In one embodiment of the invention, gain is represented on a scale of 1-10, one being the lowest gain setting and 10 being the highest. In one embodiment of the invention, gain settings are in increments of 3 decibels (dB). As those of ordinary skill in the art will recognize, other scales may be employed for representing gain and these alternatives remain within the scope of the invention.

[**0066**] Next, according to step **715**, CPU **900** checks the state of gain adjust signal **162**. If the state is true (logical one) the gain setting is reduced to its next lowest level, e.g., **9**, according to step **720**. In that case step **715** repeats as CPU **900** again checks the state of gain adjust signal **162**. If the state remains true, the gain is again reduced by one. Steps **715** and **720** are repeated until the state of gain adjust signal **162** is zero (false).

[**0067**] When the state of gain adjust signal **162** is false (zero), CPU **900** stores the current gain setting for the current frequency band in memory, according to step **725**.

[**0068**] Then, according to step **730**, the next frequency band is selected via frequency band select signal **156**. Steps **710** through **730** are repeated until gain values have been stored for all frequency bands. Next CPU **900** examines the stored gain values and their corresponding frequency bands and selects the frequency band corresponding to the highest stored gain value according to step **735**. (The highest gain value corresponds to the frequency band having the lowest noise level.) CPU **900** configures FSK transmitter **224** to transmit using the frequency band selected in step **735**. As previously explained, frequency bands are selected via frequency band select signal **156**.

[**0069**] Next CPU **900** enables transmitter **224** via transmit enable signal **154**, according to step **740**. Next CPU **900** provides the preamble portion of the data packet to be transmitted via data signal **152** according to step **745**. Next CPU **900** provides the data portion of the data packet to be transmitted via data signal **152** according to step **750**. When the packet has been transmitted, CPU **900** turns off transmitter **224** via transmit enable signal **154** according to step **755**.

[0070] CPU in Receive Mode

[0071] To operate in receive mode CPU **900** executes the steps described in **FIG. 9**. The first step, **600**, is to listen to, i.e., tune in to, the power line at the output of coupler **182** at a first selected frequency band. To accomplish this CPU **900** provides frequency band select signal **156** to variable dividers **174** and **176** of transceiver **150** (shown in **FIG.4**) To accomplish this step, CPU **900** provides a frequency band select signal **156** to variable dividers **174** and **176** of transmitter **150**. Frequency band select signal **156** sets the division factor for variable dividers **174** and **176**. The division factor set by signal **156** causes dividers **174** and **176** to divide clock signal **158** by the appropriate factor to produce frequency pair fc and 0.75 fc at the first selected frequency band. Frequency pair fc and 0.75 fc are provided to bandpass filters **184** and **186**, thereby setting the receive frequency band of the filters to the first selected frequency band.

[0072] Next, CPU **900** sets the gain of variable gain amplifiers **188** and **190** to the lowest gain setting, e.g., 1, by means of gain select signal **160**, according to step **620**. Next, according to step **630**, CPU **900** determines if the power line is quiet in the first selected frequency band. To do this CPU **900** checks gain adjust signal **162** to determine whether signal **162** remains false for greater than a single bit period. A single bit period is the time duration of a single data bit, regardless of its state. If this condition is not met, CPU **900** increases the gain setting of variable gain amplifiers **188** and **190** to the next gain value, e.g., 2, according to step **640**. Step **630** is repeated until the condition is met, i.e., gain adjust signal **162** is false for greater than a single bit period. However, if the highest gain level, e.g., **10** is reached without meeting the condition in step **630**, CPU **900** configures, by means of setting frequency band select signal **160**, band pass filters **184** and **186** to pass the next frequency band according to step **695**. In this case CPU **900** repeats steps **620** through **630** until the condition in step **630** is met.

[0073] When the condition in step **630** is met, indicating the power line is not quiet, CPU **900** determines whether noise only or, a potential signal in the presence of noise, is present on data output **164**. In one embodiment of the invention, CPU **900** accomplishes this by waiting for a period of time equal to about **4** times the time constant of signal quality circuit **155**, then CPU **900** checks to see if the voltage of signal quality signal **166** is greater than about one half of Vcc, according to steps **650** and **660**. If the voltage of signal quality signal **166** is not greater than about one half of supply voltage Vcc (indicating the presence of noise without a signal) CPU **900** selects the next frequency band by setting frequency band select signal **156**.

[0074] Then, CPU **900** steps **620** through **660** are repeated until the voltage detected on line **166** is greater than about one half of Vcc (indicating the presence of a signal in noise). When the voltage on line **166** is greater than about one half Vcc, CPU **900** checks serial data output signal **164** to verify that a data packet is present according to steps **670** and **680**. Step **680** is performed using typical packet verification schemes known to those of ordinary skill in the art.

[0075] If the results of step **680** indicate the absence of a data packet, CPU **900** selects the next frequency band as per step **695**, by setting frequency band select signal **156**. CPU **900** then repeats steps **620** through **680** until a packet is present according to step **680**. According to step **690**, when a packet is present, CPU **900** indicates that the data being received is a valid packet and no further frequency band changes are made. If no frequency band results in the detection of a good packet, CPU **900** indicates that no data signals are present on the power line, according to step **675**.

[0076] By employing several FSK power line transmitters **224** and only one FSK power line receiver **300**, the cost of communicating voltage and current data to a central database is reduced. This cost reduction is realized because the cost of transmitting utility meter data is less expensive than the cost of receiving utility meter data, thus, enabling circuitry having low power consumption to be utilized in transmitter **224**.

[0077] The number of FSK power line transmitters **224** on power lines **122**, **124**, and **126** is equivalent to the total number of houses minus the number of FSK power line receivers **300**. This number of FSK power line transmitters is required because at least one FSK power line receiver **300** is necessary to collect the data transmitted from each utility meter. This "local area network" is thus capable of transmitting power conditions from each building to central database **140** wherein central database **140** is adapted to record power measurements over time and provide this data to the utility company.

[0078] To increase the reliability of the "local area network" more than one building may employ a respective FSK power line receiver **300** and thus transmit redundant data from a least two buildings to central database **140**. With this level of redundancy, utility meter data from each building within the "local area network" is transmitted to central database **140** from least two sources providing redundancy and added reliability within the local area network.

[0079] Amplitude Modulation Communications Module

[0080] An amplitude modulation transceiver **250** is utilized to communicate meter information between buildings of the "local area network" to a remote interrogator **138**, as is illustrated in **FIG. 8**. Amplitude modulation transceiver **250** comprises the following elements: an antenna **252**; an antenna coupler **254**; a radio frequency amplifier **260**; a modulator **262**; a low-pass filter **264**; a low frequency amplifier **266**; an inverter **268**; a first divider **270**; a second divider **272**; a digital to analog converter **274**; a voltage controlled oscillator **276**; and a radio frequency power amplifier **278**.

[0081] Amplitude modulation transceiver **250** is coupled to a digital voltage signal line **286**, and generates three signals, including a detector signal at detector signal line **280**, a band pass filter signal at band pass filter signal line **282**, and a scaled frequency signal at scaled frequency signal line **284**. Components of amplitude modulation transceiver **250** are interconnected as is illustrated in the schematic block diagram of **FIG. 8**.

[0082] The above-described amplitude modulation transceiver **250** receives a wake-up signal from remote interrogator **138**. The signal is received by antenna **252** and is coupled to modulator **262** by antenna coupling **254**. This coupled signal provides broad bandpass data which include both the frequency of the wake-up signal and the frequency of the responding transmission. The signal is amplified by radio frequency preamplifier **260** and is mixed with the local

oscillator frequency generated by voltage controlled oscillator **276**. The mixer signal generated by modulator **262** is then filtered by lowpass filter **264** and is utilized by the CPU to select only the signals at the wake-up frequency. Alternatively, lowpass filter **264** may be a band pass filter which enables a specified band of frequencies to pass and prevent other frequencies from passing through filter **264**. The lowpass signal generated by lowpass filter **264** is coupled to low frequency amplifier **266** and amplified. The bandpass signal generated by low frequency amplifier **266** is coupled to the CPU by bandpass signal line **282**. Note that band pass signal line **282** will only be utilized in the event that filter **264** is a bandpass filter. The low frequency signal generated by low frequency amplifier **266** is coupled to level detector **268**. Detector **268** is a level sensor and is coupled to a detector signal line **280**. A detector signal is generated on detector signal line **280** when the low frequency signal is above a predetermined detection level. For example, the signal detection level of detector **268** is 5 volts rms at less than 1000 Hertz. This signal detection level is chosen such that noise and unwanted low pass signals will not trigger level detector **268**.

[**0083**] In order to transmit a reply signal the CPU determines what the desired transmitted frequency should be and sends the corresponding digital code via digital voltage signal line **286** to digital to analog converter **274**. This digital code is used to determine the analog level at voltage controlled oscillator **276** so as to produce the frequency of oscillation corresponding with the respective digital code generated by the CPU. Voltage controlled oscillator **276** produces a voltage controlled oscillator frequency which is sensed by radio frequency power amplifier **278**, multiplier **262**, and divider **270**, as described above. Once the voltage controlled oscillator frequency has been established, the CPU then electrically couples utility meter data over data line **288** to radio frequency power amplifier **278** to generate an amplitude modulated radio frequency signal. The amplitude modulated signal is then coupled through antenna coupler **254** to antenna **252** where it is transmitted to remote interrogator **138**. Remote interrogator **138** may also be coupled to central database **140** (**FIG. 1**) for communicating utility meter data to central database **140**.

[**0084**] The CPU may determine the temporal interval at which amplitude modulation transceiver **250** is not transmitting by monitoring the idle time interval after a wake-up signal is transmitted, hereinafter referred to as the "idle-time." The CPU then generates a code for each one of a range of possible frequencies. The codes are coupled to digital to analog converter **274**--each code being coupled to digital to analog converter **274** via digital voltage signal line **286** where each respective code causes a respective voltage level to be coupled to voltage controlled oscillator **276**, and a corresponding respective frequency to be generated by voltage controlled oscillator **276**. The modal interval in which the CPU sends the above identified frequency codes to transceiver **250** is called the calibration mode. The respective voltage controlled oscillator frequency generated by voltage controlled oscillator **276** is then electrically coupled to divider **270**, where the voltage controlled oscillator frequency is reduced by a predetermined factor, for example a factor of sixty-four, and is identified as the scaled frequency signal. An additional divider **272** may be utilized to further reduce the scaled frequency signal depending on the frequency measuring limitations of the CPU. While sixty-four was chosen as the divider factor any other factor could have been chosen that provided a result compatible with the CPU. The scaled frequency signal generated by divider **270** is then coupled to the CPU via scaled frequency signal line **284**.

[**0085**] The CPU may determine the frequency of the scaled frequency signal by the utilization of a timer counter (not shown). The timer counter is typically located on the CPU. The CPU is adapted to count the number of zero crossings of scaled frequency signal that occur within a signal half cycle, and uses this number to determine the voltage controlled oscillator frequency generated by voltage controlled oscillator **276** based on the respective code from digital voltage signal line **286**. The CPU then generates a table of the respective voltage controlled oscillator frequency for each respective computer code generated. This table is continuously updated so as to provide fresh utility meter data that reduces the error caused by temperature changes and component drift, thus enabling amplitude modulation transceiver **250** to provide accurate frequency measurement utilizing few electronic components. The frequency table may alternatively be an algorithm. Amplitude modulation transceiver **250** thus is adapted to transmit data to remote interrogator **138** when prompted. Remote interrogator **138** may then be coupled to central database **140** for communicating utility meter data to central database **140**. Remote interrogator **138** may be coupled to central database **140** by either telephone link **139** or radio frequency link **141**, as illustrated in **FIG. 1**.

[**0086**] The above amplitude modulation method may also generate a spread spectrum modulation scheme, where the digital data stream is multiplied by a set of frequencies in a pseudo random manner over a narrow frequency band. For example, random frequencies may be randomly generated over a frequency band from about 3000 to about 4000 hertz in divisions separated by about 16 hertz. In this case, the CPU generates a different set of amplitude frequencies, such as 63, repeating in a pseudo random manner as can be accomplished by a serial dual feedback shift register (not shown). Amplitude modulator **250** is used as a gating junction switching the radio frequency power "ON" and "OFF" via data line **288** after the frequency selected by the CPU has been stabilized. Thus, different sets of pseudo random frequency bursts are transmitted for the signals corresponding to logical "1" and "0." By way of example, when the data signaling rate is 100 baud the corresponding frequency shift rate is 6300 baud given 63 pseudo random steps. It is understood that different spread spectrum gains can be utilized.

[**0087**] While utility meter system **100** is an electric utility meter system which measures the electrical power used by a building, any other utility meter will alternatively function similarly. For example, a water meter is modified such that the water consumption within a building is measured electronically by usage measurement device **210**. Alternatively, a natural gas utility meter is modified such that the natural gas consumed within a building is measured electronically by usage measurement device **210**.

[**0088**] It will be apparent to those skilled in the art that, while the invention has been illustrated and described herein in accordance with the patent statutes, modifications and changes may be made in the disclosed embodiments without

departing from the true spirit and scope of the invention. It is, therefore, to be understood that the appended claims are intended to cover all such modifications and changes as fall within the true spirit of the invention.

What is claimed is:

1. A system for transmitting and receiving utility meter data via a power line, said system comprising:

a plurality of utility meters adapted to measure utility usage of respective customers and to provide utility meter data based on said usage;

a power line extending between said customers so as to form a local area network;

a plurality of transceivers, each of said transceivers coupled to a corresponding utility meter and to said power line, said transceivers adapted to receive utility meter data provided by said utility meters and to transmit said utility meter data over said power line;

said transceiver including a receiver, said receiver adapted to receive said utility meter data from said power line, said receiver including at least one narrow band pass filter for filtering signals on said power line.

2. The system recited in claim 1 wherein said narrow band pass filter has a pass band of less than about 10% of the center frequency of said band pass filter.

3. The system recited in claim 1 wherein said narrow band bass filter has a pass band of less than about 1% of the center frequency of said band pass filter.

4. The system recited in claim 1 wherein the center frequency of said band pass filter is selectable.

5. The system recited in claim 4 wherein the center frequency of said band pass filter is selectable between about 10 KHz and about 100 KHz.

6. The system recited in claim 1 wherein said receiver is adapted to monitor said power line for the presence of radio frequency transmissions.

7. The system recited in claim 1 wherein said receiver is adapted to detect utility meter data being transmitted over said power line.

8. The transmitter of claim 8 wherein said transceiver includes a transmitter adapted to transmit data utilizing said clear frequencies identified by said receiver.

9. The system of claim 1 wherein said transceiver is a Frequency Shift Keyed (FSK) transceiver.

10. A transceiver for transmitting and receiving utility meter data by means of a power line, said transmitter comprising:

a transmitter configured to transmit utility meter data over said power line;

a receiver configured to receive utility meter data over said power line;

said receiver including a narrow band pass filter configured to pass narrow band signals from said power line therethrough.

11. The transceiver as recited in claim 10 adapted to detect the presence of radio frequency transmissions comprising customer utility meter data.

12. The system as recited in claim 1 wherein said utility meters are selected from the group including a electric utility meter, a gas utility meter, and a water utility meter.

13. The system as recited in claim 2, wherein said receiver is adapted to communicate said utility meter data via said local area network to a central database.

14. The system as recited in claim 2, wherein said receiver is adapted to communicate the utility meter data from each respective utility meter within said local area network to a remote interrogator.

15. A method of communicating data over a power line comprising the steps of:

scanning said power line to identify clear frequency bands;

transmitting said data utilizing said clear frequency bands.

16. The method of claim 15 wherein the step of scanning includes the step of selecting successive passbands of a selectable band pass filter such that said band pass filter passes selected frequency bands to a receiver;

determining and storing noise levels corresponding to said passed selected frequency bands;

selecting a clear frequency band based upon said stored noise levels.

17. The method of claim 15 wherein said data is utility meter data.

18. The method of claim 15 wherein said transmitting step is accomplished using a frequency shift keying (FSK) modulation technique.

19. A method of receiving data from a power line comprising the steps of:

coupling said power line to a receiver by means of a selectable band pass filter;

scanning said power line to identify at least one frequency band by which a signal including said data is being transmitted via said power line; and

setting the passband of said selectable band pass filter to include the frequency band identified in the previous step.

20. The method of claim 19 wherein the step of scanning includes the steps of:

selecting successive passbands of said selectable band pass filter such that said band pass filter passes selected frequency bands to said receiver;

determining, for each successive passed frequency band, if a signal including said data is being transmitted via said passed frequency band.

21. An amplitude modulated communications module coupled to a utility meter and coupled to an external computer, said communications module comprising:

a power amplifier, said power amplifier adapted to generate a data signal;

a voltage controlled oscillator coupled to the external computer, wherein said voltage controlled oscillator is adapted to generate a voltage controlled oscillator frequency signal in correspondence with a frequency code generated by the external computer;

a modulator coupled to said power amplifier and coupled to said voltage controlled oscillator, wherein said modulator is adapted to generate a modulated signal corresponding to said data signal and having a modu-

lation frequency equal to the frequency of said voltage controlled oscillator frequency signal;

a low pass filter coupled to said modulator, wherein said low pass filter is adapted to generate a low pass signal in correspondence with the modulated signal.

22. The communications module as recited in claim 19, wherein said module further comprises a radio frequency antenna coupled to said power amplifier.

23. The communications module as recited in claim 19, wherein said module further comprises a radio frequency amplifier coupled to said voltage controlled oscillator, wherein said radio frequency amplifier is adapted to generate a radio frequency signal for transmission over said antenna.

24. The communications module as recited in claim 19, wherein said module further comprises at least one divider coupled to said power amplifier and adapted to reduce the frequency of said voltage controlled oscillator frequency signal so as to enable the external computer to measure the frequency of said voltage controlled oscillator frequency signal.

25. The communications module as recited in claim 22, wherein said module further comprises a level detector coupled to said low frequency amplifier and adapted to generate a detection signal when the signal generated by said low pass filter is above a predetermined voltage threshold.

26. The communications module as recited in claim 23, wherein said predetermined voltage threshold is about five volts.

27. The communications module as recited in claim 24, wherein said voltage controlled oscillator is controlled by a pseudo random signal so as to generate a spread spectrum voltage control oscillator frequency signal.

28. A power line transceiver utilizing frequency shift keying for communicating utility meter data from a respective building to a remote database comprising:

at least one pair of variable dividers for generating a adjustable center frequency signal and an adjustable non center frequency signal wherein said center frequency signal is greater than said non center frequency signal by a fixed ratio;

a power amplifier coupled to said at least one pair of variable dividers for generating a power amplifier signal having a frequency in correspondence with said center frequency signal and in correspondence with said non center frequency signal; and

at least one pair of adjustable narrow bandpass filters coupled to said power amplifier and adapted to detect said center frequency signal and said non center frequency signal.

29. The power line transceiver as recited in claim 28, wherein said transceiver further comprises at least one pair of variable gain amplifiers coupled to said pair of narrow bandpass filters for adjusting the gain of said pair of narrow band pass filters.

30. The power line transceiver as recited in claim 28, wherein said transceiver further comprises a reference voltage source, wherein said reference voltage source is adapted to generate a reference signal.

31. The power line transceiver as recited in claim 29, wherein said transceiver further comprises a first envelope detector, and a second envelope detector, wherein each envelope detector is coupled to one of said pair of variable gain amplifiers, and wherein said first envelope detector is adapted to generate a first band pass filter signal, and wherein said second envelope detector is adapted to generate a second band pass filter signal.

32. The power line transceiver as recited in claim 29, wherein said transceiver further comprises a gain adjust comparator coupled to each of said first envelope detector, said second envelope detector, and said reference voltage source, wherein said gain adjust comparator is adapted to generate a gain adjust signal when the first band pass signal is greater than the reference signal, and alternatively when said second band pass signal is greater than the reference signal.

33. The power line transceiver as recited in claim 32, wherein said transceiver further comprises a signal quality comparator coupled to each of said first envelope detector, said second envelope detector, and said reference voltage source, wherein said signal quality comparator is adapted to generate a signal quality signal when the first band pass signal and the second band pass signal is greater than the reference signal.

34. The power line transceiver as recited in claim 33, wherein said transceiver further comprises a serial data comparator coupled to each of said first envelope detector and said second envelope detector, wherein said serial data comparator is adapted to generate a serial data signal which comprises the first band pass signal and the second band pass signal.

35. A narrow band pass narrow band pass filter having electronic switches **52**, **54**, and **56**, wherein switch **56** comprises poles **10**, and wherein pole **10** is electrically movable between terminals **38** and **52**, and wherein switch **54** comprises pole **13**, and wherein pole **13** is electrically moveable between each one of terminals **26**, **28**, **30**, **32**, **34**, and **36**, and wherein switch **52** comprises poles **14** through **17**, and wherein poles **14** through **17** are electrically movable between terminals **40**, **42**, **44**, **46**, **48**, and **50**, said switching capacitor narrow band pass filter comprising:

an effective capacitor being coupled to said pole **10**;

an filter input line being coupled to said pole **10**, wherein said pole **10** is adapted to couple said effective capacitor to said pole **13**;

a plurality of matching capacitors **4** through **9** being coupled respectively to said terminals **26**, **28**, **30**, **32**, **34**, and **36** and being coupled respectively to said terminals **40**, **42**, **44**, **46**, **48**, and **50**;

said poles **14** through **17** electrically coupled to said terminals **40**, **42**, **44**, **46**, **48**, and **50** according to a first predetermined sequence and to said terminals **40**, **42**, **44**, **46**, **48**, and **50** at a predetermined frequency; and

a differential amplifier having a positive terminal and having a negative terminal coupled to said poles **14** through **17** in a second predetermined sequence wherein said poles **14** and **15** are coupled to said positive terminal and said poles **16** and **17** are coupled to said negative terminal for signal summation.

36. The narrow band pass narrow band pass filter as recited in claim 35 wherein said pole **13** is adapted to couple to each one of said terminals **26** through said terminal **36** at the predetermined frequency.

37. The switched capacitor narrow band pass filter as recited in claim 36 wherein said predetermined frequency is a center frequency fc.

38. The switched capacitor narrow band pass filter as recited in claim 36 wherein said first and said second predetermined sequence is set so as to maximize the amplification of the filter input signal by said differential amplifier at the predetermined frequency.

39. The switched capacitor narrow band pass filter as recited in claim 36 wherein said switches are electronic switches.

40. The switched capacitor narrow band pass filter as recited in claim 35 wherein the third harmonic is removed from the narrow band pass filter signal by the operation of said switch **52** with said differential amplifier.

41. The switched capacitor narrow band pass filter as recited in claim 40 wherein the range of signal detection of said filter input signal is adjustable.

42. The switched capacitor narrow band pass filter as recited in claim 41 wherein said effective capacitor has a variable capacitance.

43. A switched capacitor narrow band pass filter having a time varying filter input signal and having a narrow band pass filter signal, said switched capacitor narrow band pass filter comprising:

means for sequentially charging a plurality of matching capacitors with the filter input signal, wherein the voltage across said plurality of matching capacitors is representative of the time varying voltage of said filter input signal;

means for selectively coupling the charge on each one of said plurality of matching capacitors to the terminal of a summing differential amplifier, wherein said summing differential amplifier is adapted to sum the voltage across said plurality of matching capacitors so as to generate the narrow band pass filter signal having a maximized amplification level at a predetermined coupling frequency.

44. The switched capacitor narrow band pass filter as recited in claim 43 wherein said predetermined coupling frequency is center frequency fc.

45. The switched capacitor narrow band pass filter as recited in claim 43 wherein the range of signal detection of said filter input signal is adjustable.

46. The switched capacitor narrow band pass filter as recited in claim 43 wherein said predetermined coupling frequency is independent of the variability of capacitance of each respective matching capacitor.

47. A switched capacitor narrow band pass filter having a time varying filter input signal and having a narrow band pass filter signal, said switched capacitor narrow band pass filter comprising:

a summing operational amplifier;

a first operational amplifier coupled to said summing operational amplifier;

a second operational amplifier coupled to said summing operational amplifier;

a first electronic switch having **6** terminals and having a single pole, wherein said single pole is adapted to sequentially couple the time varying voltage associated with the filter input signal to each one of said plurality of matching capacitors;

a second electronic switch having **6** terminals and having four poles identified as pole one, pole two, pole three, and pole four, wherein said first and said third pole is adapted to couple the charge on each one of said matching capacitors to said first operational amplifier, and wherein said second and said third pole is each adapted to couple the charge on each one of said matching capacitors to said second operational amplifier.

48. The switched capacitor narrow band pass filter as recited in claim 47, wherein said single pole on said first electronic switch is adapted to sequentially couple the filter input signal to each one of said matching capacitors beginning at terminal "N," at a predetermined frequency.

49. The switched capacitor narrow band pass filter as recited in claim 47, wherein said first pole on said second electronic switch is adapted to sequentially couple to each terminal beginning at terminal "N+1" at said predetermined frequency.

50. The switched capacitor narrow band pass filter as recited in claim 47, wherein said second pole on said second electronic switch is adapted to sequentially couple to each terminal beginning at terminal "N+2" at said predetermined frequency.

51. The switched capacitor narrow band pass filter as recited in claim 47, wherein said third pole on said second electronic switch is adapted to sequentially couple to each terminal beginning at terminal "N+4" at said predetermined frequency.

52. The switched capacitor narrow band pass filter as recited in claim 47, wherein said forth pole on said second electronic switch is adapted to sequentially couple to each terminal beginning at terminal "N+5" at said predetermined frequency.

53. The switched capacitor narrow band pass filter as recited in claim 47, wherein said respective terminal "N" of said first switch and said second switch, and each respective terminal thereafter, is electrically the same point.

54. The switched capacitor narrow band pass filter as recited in claim 47 wherein said first electronic switch and said second electronic switch is adapted to sequentially couple said respective signals at said predetermined frequency independently of the variability of capacitance of a said respective matching capacitor.

55. The switched capacitor narrow band pass filter as recited in claim 47 wherein the third harmonic is removed from said narrow band pass filter signal by the operation of said second electronic switch with said differential amplifier.

56. The switched capacitor narrow band pass filter as recited in claim 47 wherein the range of signal detection of said filter input signal is adjustable.

* * * * *