(19) Europäisches Patentamt
European Patent Office
Office européen des brevets

(11) **EP 1 521 649 B1**

(12) **EUROPEAN PATENT SPECIFICATION**

(45) Date of publication and mention of the grant of the patent:
**09.01.2008 Bulletin 2008/02**

(21) Application number: **03735699.5**

(22) Date of filing: **08.07.2003**

(51) Int Cl.:
***B22D 11/06*** *(2006.01)* ***B22D 11/128*** *(2006.01)*

(86) International application number:
**PCT/EP2003/007301**

(87) International publication number:
**WO 2004/007112 (22.01.2004 Gazette 2004/04)**

(54) **CONTINUOUS CASTING PLANT WITH A DEFLECTING DEVICE FOR METALLIC STRIPS AND DEFLECTING METHOD**

STRANGGIESSANLAGE MIT ABLENKVORRICHTUNG FÜR METALLBÄNDERN UND ABLENKVERFAHREN

INSTALLATION DE COULEE CONTINUE PRESENTANT UN DISPOSITIF DE DEFLECTEUR POUR BANDES METALLIQUES ET PROCEDE DE DEFLEXION ASSOCIE

(84) Designated Contracting States:
**AT BE BG CH CY CZ DE DK EE ES FI FR GB GR HU IE IT LI LU MC NL PT RO SE SI SK TR**

(30) Priority: **10.07.2002 IT MI20021509**

(43) Date of publication of application:
**13.04.2005 Bulletin 2005/15**

(73) Proprietor: **DANIELI & C. OFFICINE MECCANICHE S.p.A.**
**33042 Buttrio (IT)**

(72) Inventors:
- **POLONI, Alfredo**
  **I-34070 Fogliano Redipuglia (IT)**
- **DE LUCA, Andrea**
  **I-33047 Remanzacco (IT)**
- **KAPAJ, Nuredin**
  **I-33100 Udine (IT)**
- **FAGGIANI, Edi**
  **I-33100 Udine (IT)**

(74) Representative: **Gervasi, Gemma**
**Notarbartolo & Gervasi S.p.A.**
**Corso di Porta Vittoria, 9**
**20122 Milano (IT)**

(56) References cited:
**WO-A-00/61320**
**WO-A-99/48636**
**DE-A- 19 637 545**
**FR-A- 1 379 973**
**US-A- 3 911 995**

- **PATENT ABSTRACTS OF JAPAN vol. 010, no. 081 (M-465), 29 March 1986 (1986-03-29) & JP 60 221103 A (ISHIKAWAJIMA HARIMA JUKOGYO KK), 5 November 1985 (1985-11-05)**
- **PATENT ABSTRACTS OF JAPAN vol. 018, no. 115 (M-1566), 24 February 1994 (1994-02-24) & JP 05 309454 A (NIPPON STEEL CORP;OTHERS: 01), 22 November 1993 (1993-11-22)**

Note: Within nine months from the publication of the mention of the grant of the European patent, any person may give notice to the European Patent Office of opposition to the European patent granted. Notice of opposition shall be filed in a written reasoned statement. It shall not be deemed to have been filed until the opposition fee has been paid. (Art. 99(1) European Patent Convention).

EP 1 521 649 B1

## Description

### Field of the invention

**[0001]** The present invention refers to a continuous casting plant with a deflecting device for deflecting a metallic strip produced by continuous casting originating from the ingot mould of the plant. The device is placed at the entrance of continuous transporters to send the strand to various stations including the casting line downstream of the ingot mould. A method for deflecting the strip is also described.

### State of the art

**[0002]** One of the technologies for the production of metallic strips consists in producing them starting from continuously cast ingots or slabs, which are successively reduced in thickness by a series of operations comprising breakdown, hot and cold rolling, together with further processing, for example thermal treatment.

**[0003]** To improve the strip production process solutions have been proposed such as the casting of the molten metal into the space existing between two cooled counter rotating parallel rolls, by regulating the distance of which it is possible to obtain strips of the desired thickness. The metallic strip descends from the ingot mould initially following a path from above towards below and is sent, deviating and sending it with guided rolling pathways or other transport devices, to the downstream working stations.

**[0004]** Emerging from the counter rotating rolls, the cast strip initially follows, a vertical stretch; The rolling transporters downstream of the ingot mould generally follow trajectories which continue horizontally or along inclined planes.

**[0005]** A problem which emerges with this type of plant, for example at the start or after breakdowns in casting, is the necessity to deviate and position an interrupted flap, or the cast head, of the metallic strip, when it descends vertically from the ingot mould, and deviate it towards the first transportation means - by means of rolls or of a similar type - immediately below the ingot mould with a horizontal direction of advancement, so as it can be seized and loaded by the transporter and sent to the successive working or manipulation stations.

**[0006]** A solution for deviating the casting head from its vertical trajectory is that described for example in the patent WO 0061320: whereby an accurately shaped plate, hinged at one of its ends, turning around an axis parallel to the plane formed by the strip and transversally to the direction of advancement of the strip, raises and brings the free flap of cast strip to the entry of the rolling plane downstream of the ingot mould. After a sufficiently long stretch the strip is deposited onto the rolling plane, it is gripped by holding rolls and can move towards the downstream stations. Frequently in continuous casting plants, below the ingot mould there is placed a large container (called wastes chest) into which the wastes, or the metal strip cast ends which are detached from the rest of the casting, are made to fall a little after exit from the ingot mould; for example, they can deal with the initial casting tracts emerging from the ingot mould immediately after starting following a stoppage of the plant: In fact, these initial portions can have mechanical characteristics not corresponding to the casting specifications.

**[0007]** A problem at the heart of the present invention is to supply a continuous casting plant fitted with a device for the deflection of the metallic strips produced by continuous casting, which is reliable and adapts to the various types of continuous casting machines existing for the production of metallic strips, and which causes minimum hindrance in the area underneath the casting rolls.

### Summary of the invention

**[0008]** According to an aspect of the present invention, such problems are solved by a continuous metallic strip casting plant, comprising:

- an ingot mould, comprising in turn a pair of counter rotating rolls, able to continuously cast a metallic strip along a vertical casting direction;
- transporting means for the metallic strips, located downstream of said direction of casting, able to transfer the cast metallic strip to the following processing stations;
- a mobile deflection device, located below said counter rotating rolls and able to deflect an initial portion of said strip directing it towards the transportation means and in addition able to pass from a standby position, in which it does not interfere with said metallic strip, to an operating position interfering with the metallic strip, in which it deflects said strip initial part from the vertical casting direction, characterised by the fact that there are provide motorised means to translate said mobile deflection device into a horizontal rectilinear direction from said standby position to said interfering operating position.

**[0009]** According to an additional aspect the invention relates to a method for continuous casting of a metallic strip by means of a plant with the features above, comprising the following operations:

- Casting an initial portion of metallic strip of a predetermined length in a vertical direction by means of counter rotating rolls ingot mould;
- placing of said deflecting device in a position of interference with respect to the direction of strip casting;
- translating horizontally said deflection device in a direction such as to bend the advancing trajectory of said initial portion of the strip and making it assume a horizontal rectilinear moving direction, when the strip foremost end starts resting on the surface of

said deflection device and deviates from said substantially vertical path;
- bringing the foremost end of the strip, through further movement of said deflection device, closer to holding and/or drawing devices to grip the initial extremity of the strip and draw it towards perdefined processing stations;
- Translating said deflection device in a horizontal direction away from the strip.

**[0010]** The deflecting device as above can be advantageously a mobile plate or flap of appropriate shape, supplied with appropriate moving means as described above.

List of the figures

**[0011]** Further advantages of the present invention will become apparent, to the skilled person, from the following detailed description of an embodiment described with reference to the following figures by way of non-limiting example, whereby:

Figure 1 shows schematically an example of a preferred embodiment of a device according to the present invention, in a first standby position of the operating sequence;
Figure 2 shows schematically the device of Figure 1 in a second position of the operating sequence;
Figure 3 shows schematically the device of Figure 1 in a third position of the operating sequence;
Figure 4 shows schematically the device of Figure 2 in a fourth position of the operating sequence.

Detailed description of a preferred embodiment

**[0012]** Figures 1-4 show schematically four successive stages in the operating sequence of a plant according to a preferred aspect of the invention.

**[0013]** The continuous metallic strip casting plant of Figure 1 comprises an ingot mould 1 which comprises in turn a pair of rolls 2, 2', named also "counter rotating rolls" in the following description. The rolls 2, 2' rotate around two axes parallel to each other in opposite rotating directions, the left roll in a clockwise direction and that on the right in anticlockwise direction with reference to the orientation in the figures.

**[0014]** The rolls 2, 2' are distanced apart so as to be separated at their point of minimal distance, by a slot through which the molten metal bath B exits downwards, cooling it and forming with a continuous casting operation the metallic strip N.

**[0015]** Reference 3 indicates a chamber filled preferably with inert gasses, to create a controlled atmosphere which avoids oxidation of the metal. The metallic strip N is immersed In this chamber from its formation, on exit from the ingot mould.

**[0016]** Underneath the inert chamber 3 there is placed a chest 4 for wastes inside which crop ends of the strip N are let fall when they are cut immediately -or almost immediately- downstream of the ingot mould 1, as can be seen in more detail in the following. The wastes chest 4 receives also the melt still remaining in the ingot mould when the casting operation, for any reason, must be suspended or interrupted, by reciprocal distancing of the counter rotating rolls 2, 2'.

**[0017]** The inert chamber 3 has a side 7 from which the strip N emerges, continuously cast by the plant. Here are various strip processing devices which comprise guide rolls, schematically represented by a single cylinder 6, onto which the strip rests drawn by appropriate devices.

**[0018]** Figure 2 is a stage of the cast operation in the plant of Figure 1, in which a crop end 10 of metallic strip N has been sliced - or however detached by an appropriate device - from the remainder of the strand N. Means for drawing the strip consists in varying shortly the speed of rotation of the rolls 2 in such a way to produce a thinning of the strip N immediately upon exit from the pair of rolls 2, so that the latter tears under its own weight, or the strip can be sliced by other known mechanical devices or other casting procedures.

**[0019]** This cutting operation is for example necessary upon starting the casting operation, or following an interruption of the casting operation for any reason, to eliminate the initial section of the new strand if this does not have the desired mechanical characteristics, as it often happens.

**[0020]** The tom crop end 10 can fall by gravity into the underlying wastes chest 3.

**[0021]** The mobile plate 5 is equipped with motorised means, as for example a hydraulic cylinder, able to impart a translational movement in a substantially horizontal direction to the plate bringing it in interference with the strip N, and deviating the latter from its vertical trajectory under the ingot mould 1. It brings the foremost end

**[0022]** E into a position where it can be laid onto conveying means schematically represented by the roll 6, which in practice could be realised by a roll conveyor.

**[0023]** The conveying means 6 can also comprise means for drawing the strip N towards the other processing stations, for example the rolling, cooling, winding and cutting stations. Such means can be one or more pairs of drawing rolls. Initially, however the strip N is pushed forwards by the rotation of the casting rolls 2 and 2', whilst not being engaged by such means.

**[0024]** The mobile plate or flap 5 has preferably an appropriately arched shape so as to gradually deviate the strip N from an almost vertical direction to the substantially horizontal direction on the rolling pathway 6. In the outlined example, the mobile flap 5 for most of its upper surface corresponds to the surface of a circular cylinder. According to an important aspect of the present invention, the mobile flap 5 can be made to interfere with the cast strip N, to deflect it, with a purely translation movement. Preferably, but not necessarily, the transla-

tion movement occurs according to a substantially horizontal rectilinear trajectory.

**[0025]** Especially at high casting speeds, it is possible that the contact between the strip and the flap takes place before the flap reaches the maximum position of interference (represented in figure 3). A sheer translation movement, especially if horizontal, has the further advantage of reducing the relative frictional velocity between the strip and the flap, in the phase when the movement of the flap occurs towards the position of maximal interference.

**[0026]** Figure 3 shows the mobile flap 5 upon reaching the end position of its operational course: It is in a position such that the foremost area of the cast strip N has a curvature, obtained by a gradual displacement of the deflector. The strip N at this stage is deviated from the initial line of vertical movement, or from the axis of casting, in a progressive manner. The leading edge 9 of the flap is found at a height such that the strip N passes from the edge 9 to the roll conveyor 6 without violent or however dangerous curvatures.

**[0027]** When a sufficient portion of strip N rests on the conveyor, represented by the roll 6, and is held by appropriate drawing means of known type, not represented, the mobile flap 5 can be withdrawn and again translated towards its final standby position, towards the left of Fig. 4, since the strip N no longer requires any support in the area underneath the counter rotating rolls 2, 2'.

**[0028]** The above embodiment can be subject to various changes without exiting from the scope of protection of the present invention: for example the mobile flap 5 can move from the standby end position to the operative end position by moving along a route not necessarily rectilinear but alternatively curved, or along a rectilinear route not horizontally but inclined, where for example the position of the standby end position is located higher than the position than the operative end point, and the flap approaches the casting strip with a downward movement.

## Claims

1. Continuous metallic strip casting plant, comprising:

   - an ingot mould (1), having a pair of counter rotating rolls (2, 2'), adapted to continuously cast a metallic strip (N) along a vertical casting direction;
   - conveying means (6) of said metallic strip, located downstream of said casting direction, adapted to transfer the metallic strip to following processing stations;
   - a mobile deflecting device (5), located lower than said counter rotating rolls and able to deflect an initial portion of the metallic strip deviating it towards said conveying means (6) and, in addition, adapted to pass from a standby position, of not interference with said metallic strip (N), to an operative position of interference with said metallic strip (N), whereby it deflects the initial portion of the strip from the vertical casting direction, **characterised by** the fact that there are provided motor means for translating said mobile deflecting device (5) along a horizontal rectilinear trajectory from the standby position to the operative position of interference.

2. The plant according to claim 1, wherein said deflector device (5) provides a rounded edge (9) in the foremost part with respect to the casting plane.

3. A method for continuous metallic strip casting by means of a plant according to one or more of the preceding claims, comprising the following operations:

   - casting of an initial portion of metallic strip of predetermined length in a vertical direction through an ingot mould (1) with counter rotating rolls (2, 2');
   - placing said deflecting device in a interference position with the vertical strip casting direction.
   - when the leading edge of the strip begins to rest upon the surfaces of the deflecting device (5) and to deviate from said substantially vertical path of advancement, making the deflecting device (5) to translate in a horizontal direction such as to deviate the advancing path of the initial strip portion and make it assume a horizontal rectilinear moving direction;
   - approaching the strip leading edge, through further translation of said deflecting device (5), towards holding and/or drawing devices to grip the front edge of the strip and draw it towards predetermined processing stations;
   - translating in a horizontal direction said deflecting device (5) in a direction of its removal from the strip.

## Patentansprüche

1. Kontinuierliche Metallstreifengießanlage, umfassend:

   - eine Kokille (1) mit einem Paar an gegenläufig drehenden Walzen (2, 2'), die so angepasst ist, dass kontinuierlich ein Metallstreifen (N) entlang einer vertikalen Gießrichtung gegossen wird;
   - Fördermittel (6) dieses Metallstreifens, die stromabwärts dieser Gießrichtung angeordnet sind, die so angepasst sind, dass der Metallstreifen an nachfolgende Verarbeitungsstationen übergeben wird;
   - eine mobile Ablenkvorrichtung (5), die niedri-

ger als diese gegenläufig drehenden Walzen angeordnet ist und die in der Lage ist, einen Anfangsteil des Metallstreifens abzulenken, wodurch er in Richtung dieser Fördermittel (6) abgeleitet wird, und die zusätzlich so angepasst ist, dass sie von einer Warteposition ohne Wechselwirkung mit diesem Metallstreifen (N) zu einer Arbeitsstellung mit Wechselwirkung mit diesem Metallstreifen (N) übergeht, wobei sie den Anfangsteil des Streifens von der vertikalen Gießrichtung ablenkt, **gekennzeichnet durch** die Tatsache, dass Motormittel zum Umsetzen dieser mobilen Ablenkvorrichtung (5) entlang eines horizontalen geradlinigen Bewegungsablaufs von der Wartestellung zu der Arbeitsstellung mit Wechselwirkung bereitgestellt werden.

**2.** Anlage nach Anspruch 1, worin diese Ablenkvorrichtung (5) eine gerundete Kante (9) im vordersten Teil in Bezug auf die Gießebene bereitstellt.

**3.** Verfahren zum kontinuierlichen Metallstreifengießen mittels einer Anlage gemäß einem oder mehreren der vorstehenden Ansprüche, umfassend die folgenden Arbeitsgänge:

- Gießen eines Anfangsteils eines Metallstreifens mit einer vorbestimmten Länge in einer vertikalen Richtung durch eine Kokille (1) mit gegenläufig drehenden Walzen (2, 2');
- Einstellen dieser Ablenkvorrichtung in eine Wechselwirkungsposition mit der vertikalen Streifengießrichtung;
- wenn die führende Kante des Streifens anfängt, auf den Oberflächen der Ablenkvorrichtung (5) aufzuliegen und von diesem im Wesentlichen vertikalen Förderpfad abzuweichen, wird die Ablenkvorrichtung (5) in eine horizontale Richtung umgesetzt, um den Pfad der Förderung des Anfangsstreifenteils abzuleiten und ihn dazu zu bringen, eine horizontale geradlinige Bewegungsrichtung anzunehmen;
- Annähern an die Führungskante des Streifens durch eine weitere Umsetzung dieser Ablenkrichtung (5) in Richtung von Halte- und/oder Zugvorrichtungen, um die Vorderkante des Streifens zu fassen und sie in Richtung vorbestimmter Verarbeitungsstationen zu ziehen;
- Umsetzen dieser Ablenkvorrichtung (5) in eine horizontale Richtung in eine Richtung ihres Entfernens von dem Streifen.

**Revendications**

**1.** Installation de coulée en continu de métal en bande, comprenant :

- une lingotière (1), équipée d'une paire de rouleaux contrarotatifs (2, 2'), adaptés à la coulée en continu d'une bande de métal (N) le long d'une direction de coulée verticale ;
- un moyen de déplacement (6) de ladite bande de métal placé en aval de ladite direction, adapté au transfert de la bande de métal vers les stations de traitement suivantes ;
- un dispositif mobile de déviation (5), situé plus bas que lesdits rouleaux contrarotatifs et en mesure de dévier une portion initiale de la bande de métal en la détournant vers ledit moyen de déplacement (6) et, de plus, adapté pour passer d'une position de repos, de non serrage sur la bande de métal (N), à une position active de serrage sur ladite bande de métal (N) ce par quoi il dévie la portion initiale de la bande par rapport à la direction de coulée verticale, **caractérisé par le fait qu'**il est disposé un moyen de moteur électrique destiné à translater ledit dispositif mobile de déviation (5) le long d'une trajectoire rectiligne horizontale depuis la position de repos jusqu'à la position active de serrage.

**2.** Installation selon la revendication 1, dans laquelle ledit dispositif de déviation (5) présente un bord arrondi (9) dans sa partie la plus éloignée par rapport au plan de coulée.

**3.** Procédé destiné à la coulée en continu de métal en bande par le moyen d'une installation selon l'une ou plusieurs des revendications précédentes, comprenant les opérations suivantes :

- effectuer la coulée d'une portion initiale de bande de métal de longueur prédéterminée selon une direction verticale au moyen d'une lingotière (1) avec des rouleaux contrarotatifs (2, 2') ;
- placer ledit dispositif de déviation en position de serrage avec la direction de coulée verticale ;
- lorsque le bord d'attaque de la bande commence à reposer sur les surfaces du dispositif de déviation (5) et à se détourner de ladite trajectoire substantiellement verticale d'avancement, faire translater le dispositif de déviation (5) selon une direction horizontale de façon à détourner la trajectoire d'avancement de la portion de bande initiale et lui faire prendre une direction de déplacement rectiligne horizontale ;
- approcher le bord d'attaque de la bande, par une nouvelle translation dudit dispositif de déviation (5), en direction de dispositifs de maintien et/ou de traction pour saisir le bord avant de la bande et la tirer en direction de stations de traitement prédéterminées ;
- faire se translater selon une direction horizontale ledit dispositif de déviation (5) dans le sens de son retrait de la bande.

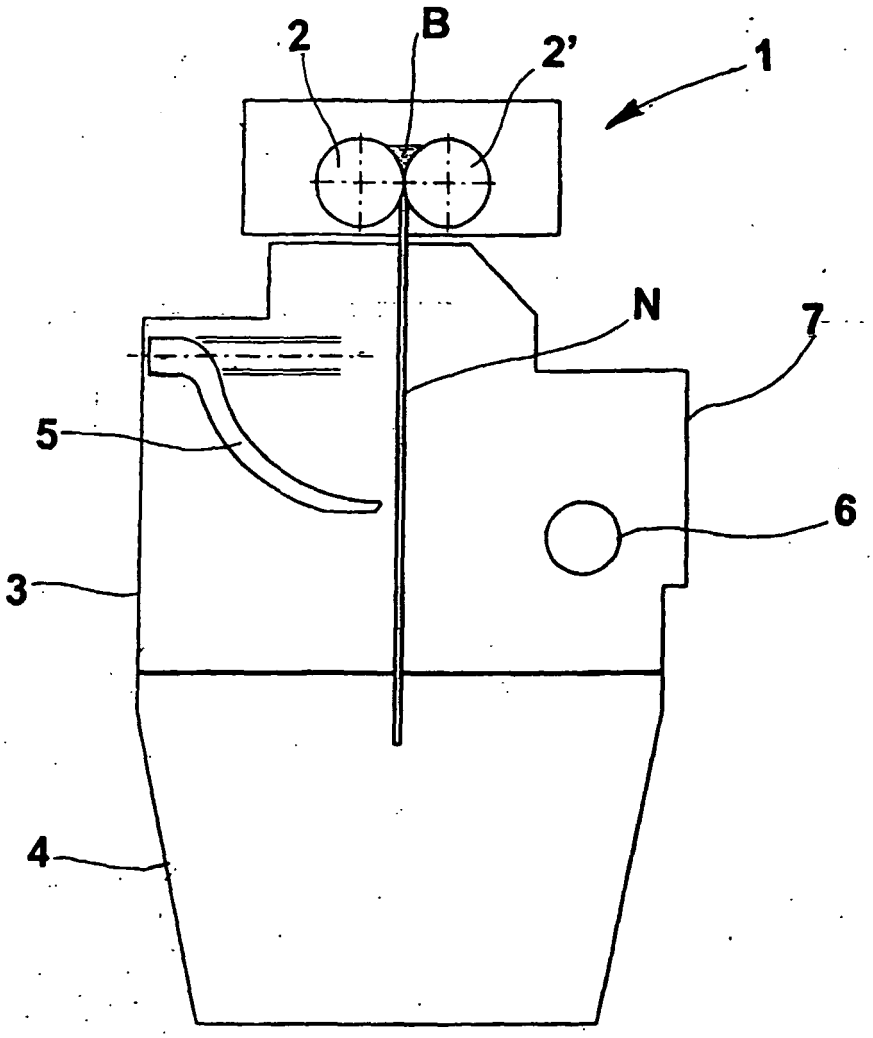


Fig. 1

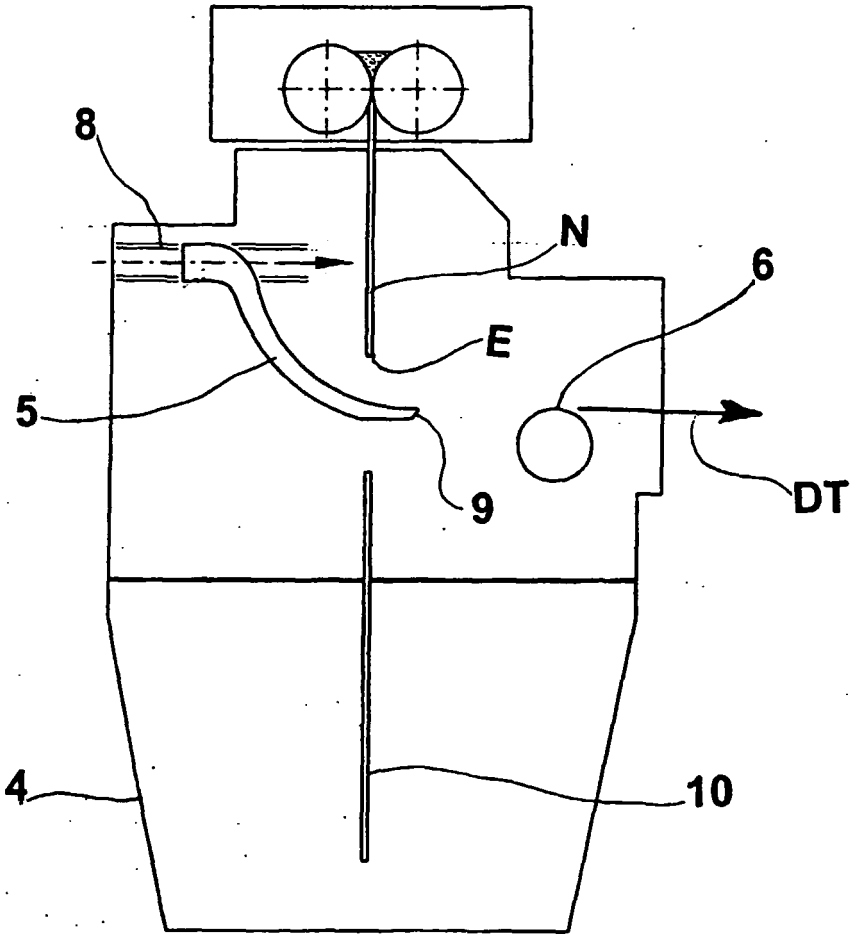


Fig. 2

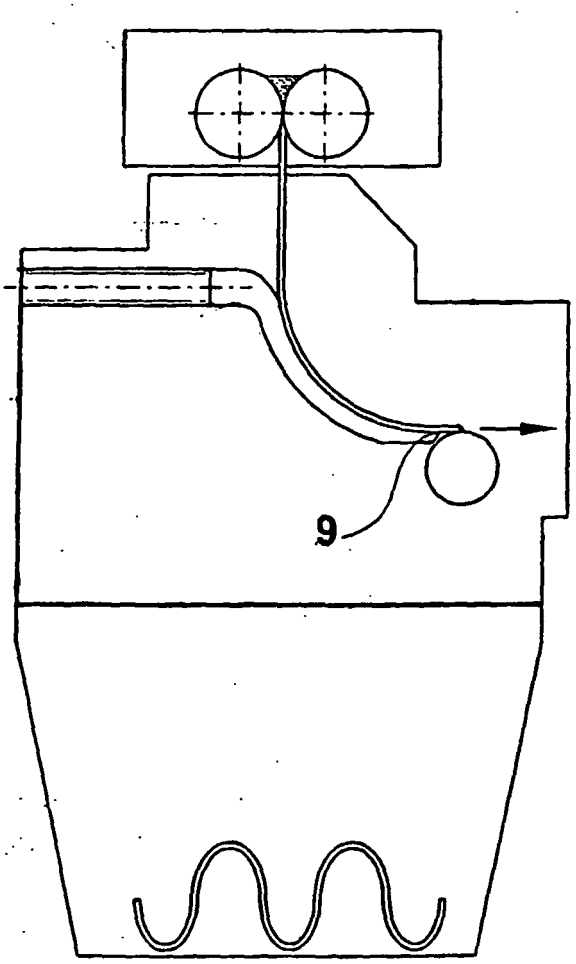


Fig. 3

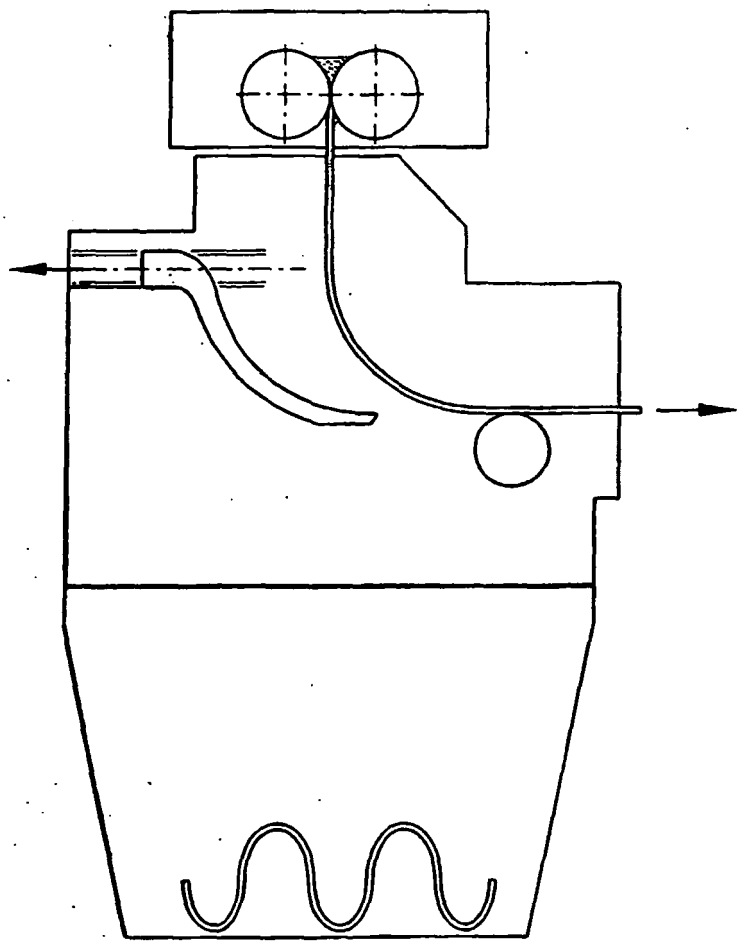

Fig. 4

## REFERENCES CITED IN THE DESCRIPTION

*This list of references cited by the applicant is for the reader's convenience only. It does not form part of the European patent document. Even though great care has been taken in compiling the references, errors or omissions cannot be excluded and the EPO disclaims all liability in this regard.*

### Patent documents cited in the description


- WO 0061320 A **[0006]**