Feb. 5, 1935. W. F. CASSEDY, JR 1,989,739

REMOTE CONTROL DEVICE

Original Filed June 22, 1932 2 Sheets-Sheet 1

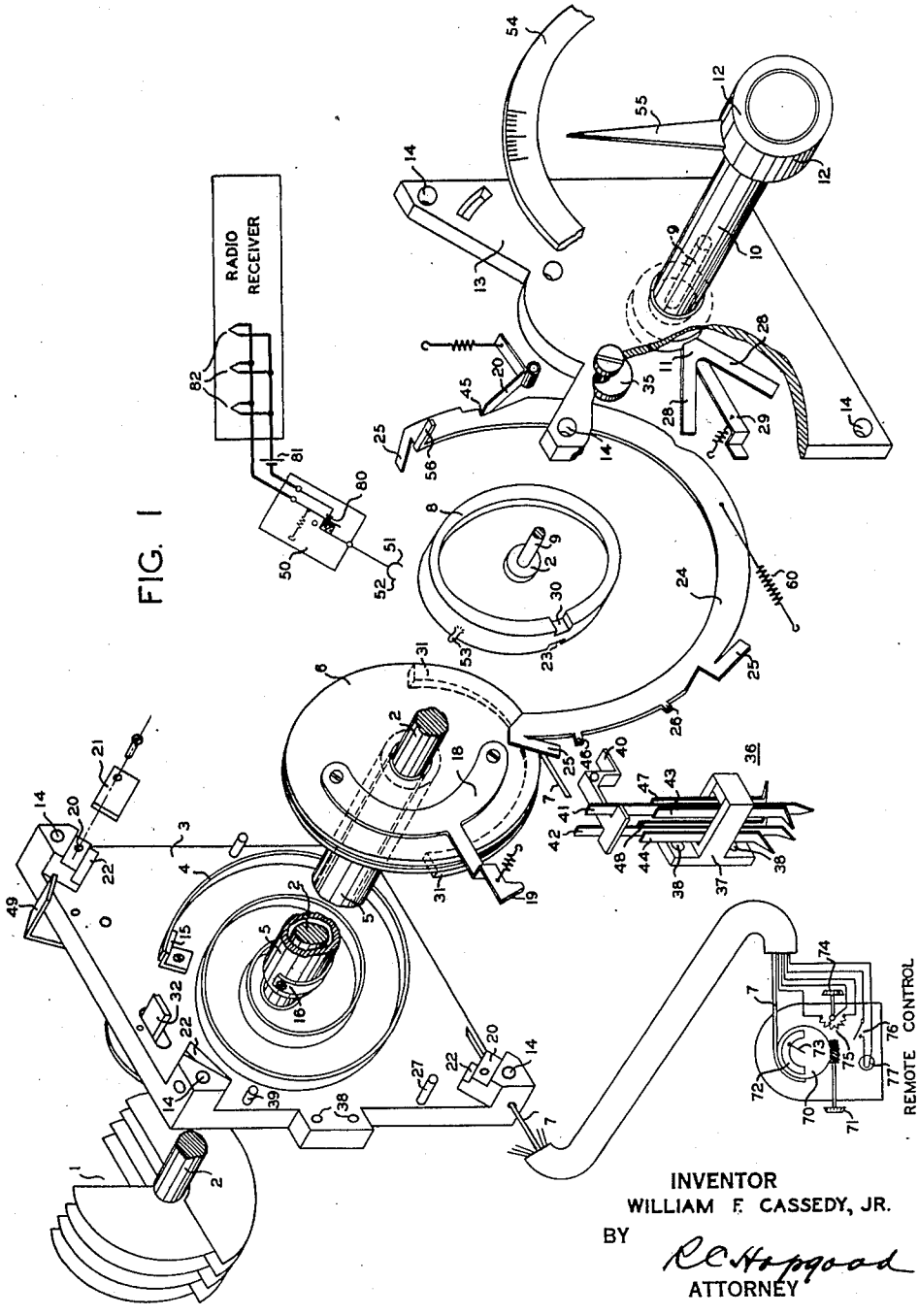

FIG. 1

INVENTOR
WILLIAM F. CASSEDY, JR.
BY
ATTORNEY

Feb. 5, 1935. W. F. CASSEDY, JR 1,989,739

REMOTE CONTROL DEVICE

Original Filed June 22, 1932 2 Sheets-Sheet 2

FIG. 5

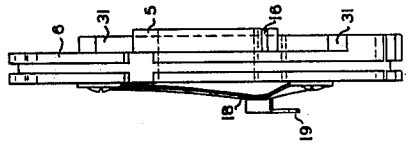

FIG. 9

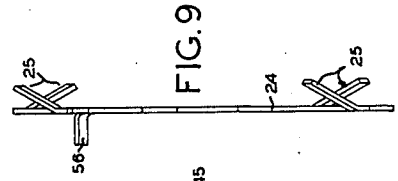

FIG. 4

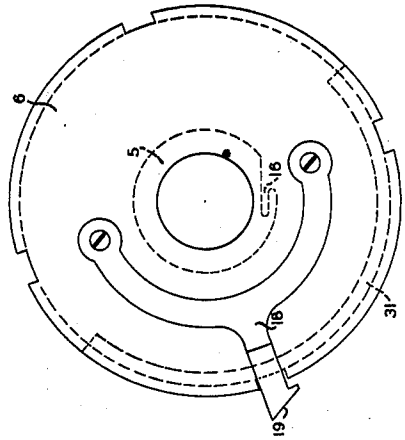

FIG. 8

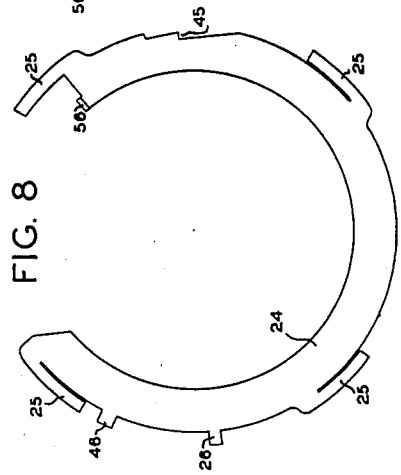

FIG. 3

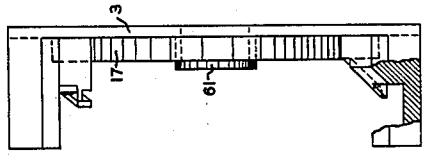

FIG. 7

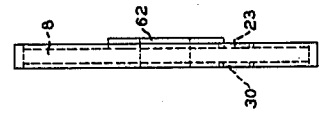

FIG. 2

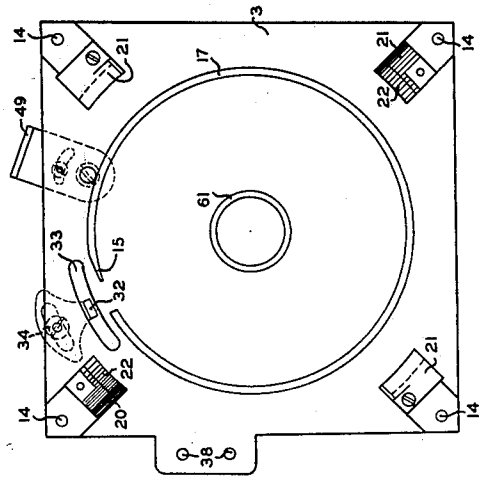

FIG. 6

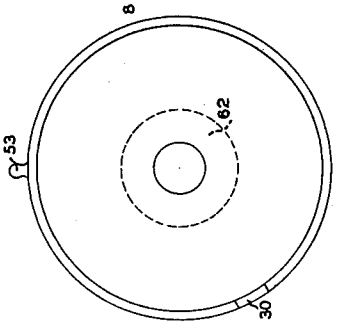

INVENTOR
WILLIAM F. CASSEDY, JR.
BY R C Hoppood
ATTORNEY

Patented Feb. 5, 1935

1,989,739

UNITED STATES PATENT OFFICE

1,989,739

REMOTE CONTROL DEVICE

William F. Cassedy, Jr., Millburn, N. J., assignor to International Communications Laboratories, Inc., Newark, N. J., a corporation of New York

Application June 22, 1932, Serial No. 618,708

10 Claims. (Cl. 250—20)

This invention relates to remote control devices, and particularly to devices for the remote control of a radio receiver. By remote control is meant control from any point other than the set itself. For example, the remote point may be a favorite armchair only a few feet removed from the set, or the radio set may be put in a closet or cellar and the remote point be a considerable distance away.

In co-pending application, Serial No. 400,575, filed October 18, 1929 by William J. Gillule, a remote control for a radio receiver is shown in which a pulley is keyed to the shaft of a plurality of gang condensers which control the tuning of the set. The pulley is rotated by a wire or other tractile element enclosed in a sheath. The tractile element is wound around a drum at the remote point, which drum is turned by a suitable mechanism, in this specific case, a worm drive. A spiral spring at the radio set resists the motion of the tractile element when it is operated to wind on the drum at the remote point. The spring, of course, assists the operation of tuning the set in the reverse direction, that is, the direction for which the tractile wire unwinds from the drum at the remote point. Means are also provided in the Gillule application for turning the set on and off at the remote point and for controlling the volume from the remote point.

When a radio set is provided with means for controlling its operation from a remote point, it is desirable that it shall also be possible to control the set locally, that is, by means of dials and switches located on the panel behind which the set is mounted. With apparatus such as that disclosed in the Gillule application it is impossible to provide this dual control, as the knob which turns the condensers locally will not operate against the pull of the wire in the sheath, and the knob which turns the drum at the remote point to turn the condensers will not operate against the friction of the local tuning knob and gearing.

An object of this invention is to provide means for controlling a radio receiver, or any apparatus which may be operated in a similar manner, from the receiver itself or from a remote point.

A feature of the invention is the provision of a driven element keyed to the condenser shaft, two driving elements operated by a local knob and remote tuning control respectively, and a differential cam which may be operated by the tuning knob at the receiver to release the driving element connected to the remote point from the driven element, and connect the driving element to the driven element at the local point; and which may also be operated by the tuning knob at the remote point to release the local driving element from the driven element and connect the remote driving element thereto.

From whichever end a radio set may be controlled at any particular time, it is desirable to be able to control the volume of the received signals from the end from which the tuning of the receiver is controlled.

Another object of this invention is to provide means which may be controlled from the set or from the remote point for switching the volume control to the point from which the set is to be controlled simultaneously with switching the tuning control for that point.

In the drawings, like numbers refer to similar parts throughout.

Fig. 1 is an exploded view in perspective of the apparatus comprising the device, with the remote control shown diagrammatically;

Fig. 2 is a front view of the base plate of the device;

Fig. 3 is an end view of the base plate;

Fig. 4 is a front view of the pulley operated from the remote point by the tractile element;

Fig. 5 is an end view of this pulley;

Fig. 6 is a front view of the driven element which is keyed to the condenser shaft;

Fig. 7 is an end view of the driven element;

Fig. 8 is a front view of the differential cam; and

Fig. 9 is an end view of the differential cam.

A condenser, or plurality of condensers 1, connected in the circuits of a radio receiver, may be operated to tune the receiver to any frequency in the range for which it is adapted. These condensers are fixedly mounted on a shaft 2 which may be turned to tune the set. The shaft 2 projects through the center of a base plate 3. A spiral spring 4 is connected at one end 15 to the base plate 3, and at the other end 16 to a hub 5 (Fig. 1). The connection 16 is shown diagrammatically in Fig. 4. The hub 5 revolves in a bushing 61. The hub 5 is actually only about one-quarter inch long. A driving element 6 is secured to the hub 5 and is, therefore, loosely mounted on the condenser shaft 2. The driving element 6 has a groove in its periphery in which the sliding wire or tractile element 7 fits, and is adapted to be rotated by said wire 7. The wire 7 is connected to a drum 70 at the remote point and is wound around said drum by the operation

of a knob 71 geared thereto to rotate said driving element 6. Since the element 6 is operated from a remote point only, it will be hereafter referred to as the remote driving element, although, as may be seen, it is part of the unit located at the radio receiver. A driven element 8 is keyed to the condenser shaft and turns the condenser shaft to tune the set whenever it is rotated. A secondary shaft 9 is connected to the front of this driven element and on this shaft is mounted a hub 10 to which is connected a second driving element 11 and a knob 12. The driving element 11 is controlled by the knob 12 located at the radio set. It will, therefore, be hereafter referred to as the local driving element. The apparatus shown in Fig. 1 assembles into a very compact unit. An idea of the size of the assembled apparatus may be obtained from Fig. 3, which shows an end view of the base plate 3. The shoulders of this base plate shown at the top and bottom of Fig. 3 are about one inch wide. A cover plate 13 is attached to the base plate 3 by means of screws passing through the holes 14 at the corners of the base and cover.

The remote driving element 6 fits snugly against an annular projection 17 (Fig. 2) on the base plate, thus forming a casing for the spring 4. Attached to the remote driving element 6 is a driving arm 18, the end of which has a cam surface 19 for engagement with a pawl 20. The driving arm 18 rests against the inner surface of driven element 8 and presses against this surface in an attempt to engage the notch 23 therein. This spring effect is illustrated diagrammatically by the small coil spring shown attached thereto. Shoulder 62 allows room for the driving arm between elements 6 and 8. The base member 3 has four shoulders at the corners and these shoulders have sloping sections 20 to which plates 21 are attached by screws to form sleeves between the underside of the plates and a second sloping section 22. A differential cam 24 has four arms 25 adapted to slide within the sleeves so formed. The cam 24 has a spring attached thereto, the other end of which is secured to the base plate, which is attempting to pull it out of these sleeves. When the pawl 20 is in engagement with the cam 24, as shown in Fig. 1, it holds the cam in position. When the pawl 20, however, is released by cam surface 19 on driving arm 18, the cam 24 is retained by the engagement of a finger 26 on the cam with a stud 27 on the base plate. The driving arm 11 has three prongs, shown in Fig. 1. Two prongs 28 press against the back of the cover plate to provide friction for the knob 12 to keep it in a position to which it is set. The center prong 29 presses against the front of the driven element 8 and attempts to engage the notch 30 therein and thus drive the condenser shaft. We thus have two driving elements, the remote driving element 6 and the local driving element 11, each having a driving arm attempting to engage the driven element 8 in order to control the rotation of the condenser shaft. Between these two driving arms is the differential cam 24 on which the driving arms slide when not in engagement with the driven element 8.

Before describing the operation of the device the remaining auxiliary apparatus will be described. Since the condensers function to change the tuning of the radio receiver through 180°, the two driving elements are limited to 180° rotation. The remote driving element 6 has a groove 31 in the back thereof for 186°. A stop 32 is secured to the base plate and adapted to ride in this groove. The stop 32 is 6° wide so that the remote driving element 6 can turn through 180°. The stop 32 protrudes through an aperture 33 in the base plate and is adjustable by means of a screw 34, so that the angular movement of the remote driving element may be adjusted to correspond with the movement of the condensers. Since the driven element 8 is keyed to the condenser shaft, it is limited in its movement by the stops that are used for the condensers. Driving element 11 is also provided with stops 35 secured to the cover plate. These stops are likewise adjustable, the adjustability being obtained by securing them to the cover plate off center, as shown in Fig. 1.

It has been previously mentioned that it is desirable to be able to control the volume of the received signal from the point at which the tuning of the set is controlled. A switch 36 is provided for accomplishing this. A frame 37, to which the switch 36 is secured, is attached to the base plate by means of screws through the holes 38. Pivoted on a stud 39, mounted on the base plate, is an insulated arm 40. The switch members 41 and 42 normally make contact with contacts on members 43 and 44. When the pawl 20 is released from engagement with the notch 45 on differential cam 24, and the differential cam, thus released, moves in a clockwise direction, finger 46 on this cam presses against the under-surface of arm 40 and breaks the contact previously mentioned and makes contact between switch members 41 and 42 and corresponding members 47 and 48. As the differential cam 24 has an angular rotation of a few degrees one way or the other as the remote or local driving arm engages the driven element 8, the circuit through switch 36 is accordingly made or broken to switch the volume control from the remote end to the local end and vice versa. Any suitable circuits may be provided for this purpose and they would be so simple that it is considered unnecessary to disclose them in this application. Ordinarily, the number of contact points provided would not be utilized, but as this unit may be attached to any radio receiver a sufficient number of contacts is provided to permit any circuit connections to be made which may be desired. An arm 49 is secured to the base plate. A toggle switch 50 may be attached thereto for turning the set on and off. The prongs 51 and 52 of this switch are engaged by the finger 53 on the periphery of the driven element 8. The arm 49 is made adjustable, as shown in Fig. 2, so that the set will be turned off whenever the driven element 8 is turned to the position for zero condenser setting on the dials.

It will be understood, as heretofore stated, that this device is adapted for attachment to any radio receiver. A dial 54 is shown. This dial may be a portion of the panel of the radio receiver, which would fit in between the knob 12 and cover plate 13. A pointer 55 indicates the condenser settings. At the remote end there are a similar dial 72 and pointer 73 for indicating the setting when controlled from that end. Also, there is a knob 74 for controlling the volume by means of potentiometer 75, and a switch 76 and dial light 77. A similar dial light and volume control would be provided at the receiver. There would not necessarily be a separate switch at the control ends for turning the set on and off, as this is accomplished by means of the toggle switch 50, which may be operated by the tuning control from either end.

The differential cam 24 performs the function of releasing the control from one end and permitting control from the other end. This cam has an angular movement through a few degrees. It is moved in a counterclockwise direction by the driving arm 29. This movement occurs when this arm is turned to the position for a condenser setting of 100, assuming the dials to be graduated from zero to 100. At this point it engages a stud 56 on the differential cam. As shown in Fig. 1, the differential cam 24 is set at its extreme counterclockwise position and is held in this position by the pawl 20. In order to permit it to rotate now in a clockwise direction, the remote driving arm must be turned to a position corresponding to a dial setting of 100. At this point the cam surface 19 on driving arm 18 engages the pawl 20 and removes it from the notch 45. The spring attached to the differential cam causes it to rotate in a clockwise direction. It can only move a few degrees, because of the contact of finger 26 with stud 27 and also the contact of finger 46 with arm 40. As the arms 25 of the differential cam slide in the sleeves 22, which are sloping, this cam, in addition to its angular movement, will also have a lateral movement parallel to the axis of the condenser shaft. As the driving arms 18 and 29 are pressed against the two sides of the differential cam, attempting to come into engagement with the notches 23 and 30 thereon, this lateral movement will hold one of these arms out of engagement with its corresponding notch and permit the other arm to engage the notch and thus control the rotation of the driven element 8 and the tuning of the set.

The operation of the device is as follows: assuming, first, that the tuning dials at the set and at the remote end are both set to zero and that, when last in use, the set had been operated by the controls at the set. This being the case, the driving arm 29 will be in engagement with notch 30 on the driven element 8, and driving arm 18 will be held out of engagement with notch 23 by the differential cam 24. That is, the differential cam 24 will be in its counterclockwise position and will be held by the pawl 20, as shown in Fig. 1. Now it is desired to tune the receiver by the local controls to a station which is received at 50 on the dials. The knob 12 is turned up to 50. As driving arm 29 engages notch 30, the driven element 8 and the condensers 1 will be turned to 50. As the driven element 8 moves away from the zero position, finger 53 will engage prong 51 of toggle switch 50 and turn the set on. The control of the radio set may continue to be exercised from the set itself through the entire tuning range. When it is desired to shut the ratio set off, the knob 12 is simply turned back to zero and the finger 53 engages prong 52 of toggle switch 50 and turns the set off. During the tuning control at the set the remote driving element 6 will remain stationary.

Now, assuming that the set has been tuned to 50 by means of the local knob 12 and that it is now desired to change the tuning of the set or to turn it off from the remote point. The operator at the remote point turns the knob there for a condenser setting of 100. The wire 7 accordingly causes the driving element 6 and driving arm 18 to rotate to a corresponding position. No other portion of the apparatus shown in Fig. 1 is affected, however, as the differential cam 24 prevents the driving arm 18 from engaging the driven element 8. When the driving element 6 has been rotated to a position corresponding to a dial setting of 100, cam surface 19 on driving arm 18 comes in contact with pawl 20 and removes it from notch 45. Spring 60 causes differential cam 24 to revolve in a clockwise direction until finger 26 engages stud 27. As arms 25 are set at an angle with the plane of the differential cam 24 and slide in sleeves 22, the differential cam, as it executes this clockwise movement, will move a short distance in a direction parallel with condenser shaft 2 toward the cover plate 13. The surface of the differential cam will then press against driving arm 29 and remove it from engagement with notch 30, and driving arm 18 will press against the back surface of driven element 8. The tuning knob at the remote point is then turned back to a condenser setting of 50, the point to which the set was last tuned by the knob 12, of course turning the remote driving element 6 accordingly. When the driving element 6 reaches this point the driving arm 18 will engage notch 23 on driven element 8. It is no longer held out of such engagement because the differential cam, which previously prevented it from engaging this notch, has now been moved forward. Any further operation of the tuning control at the remote point will continue to turn the driving element 6 and will now also turn the driven element 8 and the tuning condensers 1 secured to the shaft on which element 8 is mounted. Therefore, the tuning of the set may now be controlled over the entire range from the remote point. When it is desired to turn the set off, the tuning dial is set to zero. Finger 53 on driven element 8 engages prong 52 of the toggle switch 50 and turns the set off. Whenever it is desired to resume operation of the set from the remote point, the dials will simply be turned to the setting corresponding to the desired station. As the condensers move away from the zero setting, the finger 53 will engage prong 51 of toggle switch 50 and turn the set on.

Assuming now that the set has been tuned to 50 from the remote point. The set will, of course, be turned on by the finger 53. It is now desired to operate the set at the set itself. This may not be done without a preliminary adjustment, as the differential cam 24 is keeping the driving arm 29 out of engagement with notch 30 on driven element 8. The knob 12 is turned to a condenser setting 100, of course turning the driving arm 11 accordingly. At this point, or a few degrees before reaching this point, driving arm 29 comes in contact with finger 56 on differential cam 24 and moves the differential cam in a counterclockwise direction. Pawl 20 slips into notch 45 and holds it in this position. When the differential cam is moved in the counterclockwise direction, arms 25 slip into sleeves 22 and the entire cam moves toward the rear of the unit, that is, in a direction parallel with condenser shaft 2 and farther away from cover plate 13. When the cam thus moves laterally, its back surface comes in contact with driving arm 18 and removes it from engagement with notch 23 on driven element 8, and driving arm 29 presses against the front surface of driven element 8. Knob 12 is then turned back to 50, since this is the point for which the set was last tuned from the remote end. At this point driving arm 29 will now engage notch 30 since it is no longer prevented from doing so by the differential cam 24, and any further operation of knob 12 will move the condensers accordingly. When it is desired to turn the set off, the knob 12 is simply turned to zero at which point the finger

53 operates toggle switch 50, as before, to turn the set off.

To sum up the previous operations: when the set is being tuned from the remote end it may be tuned over the entire range and may be turned off; if it is desired to operate the set from the local end it is first necessary to turn the knob at that end to 100 and then turn it back to the point for which it was last set by the control at the remote end; after this the set may be tuned to any point in its range from the local end or may be turned off: The operation just summed up in the previous sentence may be reversed. That is, if control is first exercised at the local end the remote end may take control in the manner just described for the local end, and the local end may regain control in the manner just described for the remote end.

It has been previously mentioned that when differential cam 24 is in its counterclockwise position, arms 41 and 42 are in contact with arms 43 and 44. Since in this position of the differential cam the set is under the control of the local knobs, these contacts will be used to complete a circuit for controlling the volume by means of a knob on the panel of the set itself. It has also been previously mentioned that when the differential cam 24 is in its clockwise position finger 46 presses against the lower surface of arm 40 and causes arms 41 and 42 to make contact with arms 47 and 48 and break the contact with arms 43 and 44. When the cam is in this position the tuning of the set is under the control of the remote point and the contacts just mentioned are, therefore, used to complete a circuit for controlling the volume of the received signals by means of a dial and a resistance, or any other suitable means, at the remote point.

What is claimed is:

1. A remote control device comprising a first driving element controlled from a remote point, a second driving element controlled locally, an element to be driven, differential means for controlling the engagement of said driving elements with said driven element, means controlled by said first driving element to operate said differential means, and means rendered effective by operation of said differential means for connecting said first driving element to said driven element and controlling said driven element through its entire range of operation whilst said second driving element is in an intermediate advanced position and for preventing said second driving element from controlling said driven element.

2. A remote control device comprising a first driving element controlled from a remote point, a second driving element controlled locally, an element to be driven, differential means controlling the engagement of said driving elements with said driven element, means controlled by said second driving element for operating said differential means, and means rendered effective by operation of said differential means for connecting said second driving element with said driven element and controlling it through its entire range of operation whilst said first driving element is in an intermediate advanced position, and for preventing said first driving element from controlling said driven element.

3. A radio receiver, means for tuning said receiver, a driven element for controlling said tuning means, a first driving element controlled from a remote point adapted to engage said driven element, a second driving element controlled locally adapted to engage said driven element, differential means bodily movable with respect to said driving and driven elements for alternatively controlling the engagement of said driving elements with said driven element, and means controlled by said first driving element for moving said differential means to release said second driving element and permit said first driving element to control said driven element through the entire frequency range of said receiver.

4. A radio receiver, means for controlling the volume of said receiver, means for tuning said receiver, means for operating said tuning means from a remote point, means for operating said tuning means locally, means alternatively controlling the operation of said two last-mentioned means, and means operated by said alternative controlling means for switching the volume control of said receiver to the point from which the tuning of said receiver is controlled.

5. A remote control device comprising a first driving element controlled from a remote point, a second driving element controlled locally, an element to be driven, means for controlling the engagement of said driving elements with said driven element, means controlled by said first driving element to operate said first-mentioned means, and coupling means rendered effective by operation of said second mentioned means for connecting said first driving element to said driven element and controlling said driven element through its entire range of operation whilst said second driving element is in an intermediate advanced position, and for preventing said second driving element from controlling said driven element.

6. A remote control device comprising a first driving element controlled from a remote point, a second driving element controlled locally, an element to be driven, means controlling the engagement of said driving elements with said driven element, means controlled by said second driving element for operating said first-mentioned means, and coupling means rendered effective by operation of said second mentioned means for connecting said second driving element to said driven element and controlling it through its entire range of operation, whilst said first driving element is in an intermediate advanced position, and for preventing said first driving element from controlling said driven element.

7. A radio receiver, means including a rotatable shaft for tuning said receiver, a driven element fixed to said shaft, rotatable driving elements one locally controlled and the other remotely controlled mounted concentrically with said shaft and having a rotary movement independent thereof, an arm attached to each driving element movable with respect thereto and engageable with said driven element for effecting a driving connection therewith, and a cam operated by one of said driving elements when disengaged from said driven element for interrupting driving engagement between the other driving element and the driven element and for causing driving engagement to be established between said one driving element and said driven element.

8. A radio receiver, means including a rotatable shaft for tuning said receiver, a driven element fixed to said shaft, rotatable driving elements one locally controlled and the other remotely controlled mounted concentrically with said shaft and having a rotary movement inde-

pendent thereof, an arm attached to each driving element movable with respect thereto and engageable with said driven element for effecting a driving connection therewith, and a cam operated by either of said driving elements to engage one of said arms and to disengage the other of said arms thereby to move said one arm out of driving engagement with said driven element and to cause said other arm to move into driving engagement therewith.

9. A radio receiver, means including a rotatable shaft for tuning said receiver, a driven element fixed to said shaft, rotatable driving elements one locally controlled and the other remotely controlled positioned with said driven element therebetween and mounted concentrically with said shaft and having a rotary movement independent thereof, an arm attached to each driving element movable with respect thereto and engageable with said driven element for effecting a driving connection therewith, and a cam positioned between said arms and operated by either of said driving elements and moved under control thereof to engage one of said arms and to disengage the other of said arms whereby the said one arm is moved out of driving engagement with said driven element and the said other arm is caused to move into driving engagement therewith.

10. A radio receiver, means including a rotatable shaft for tuning said receiver, a driven element fixed to said shaft, rotatable driving elements one locally controlled and the other remotely controlled positioned with said driven element therebetween and mounted concentrically with said shaft and having a rotary movement independent thereof, an arm attached to each driving element movable with respect thereto and engageable with said driven element for effecting a driving connection therewith, an arcuate cam disposed about said driven element and interposed between said arms, and means controlled by each driving element for causing said cam to move axially of said shaft thereby to interrupt driving engagement between one of said arms and said driven element and to establish driving engagement between the other of said arms and said driven element.

WILLIAM F. CASSEDY, JR.