April 22, 1958 A. WEHNER 2,831,576

SIEVING DEVICE

Filed July 28, 1955

Fig. 1

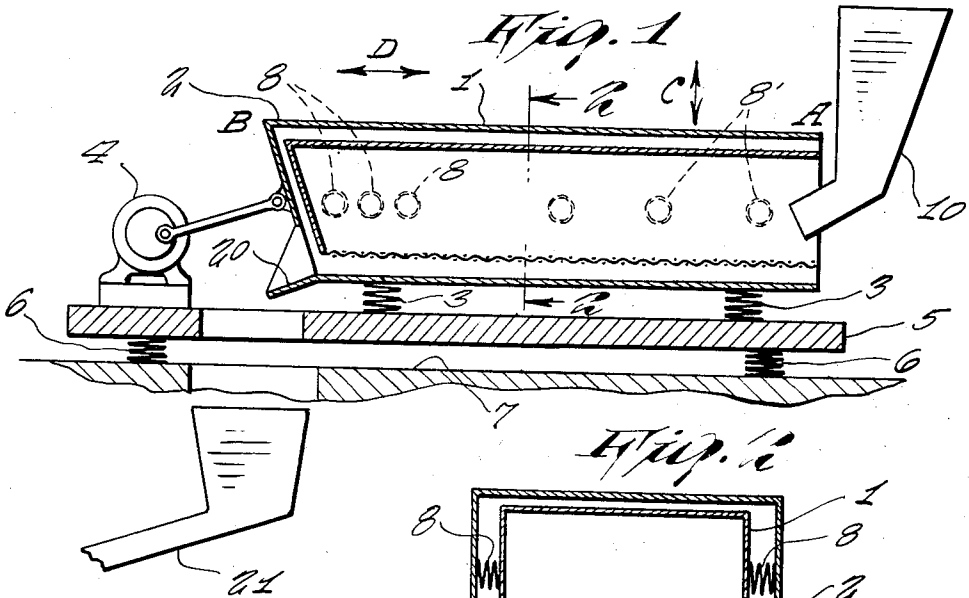

Fig. 2

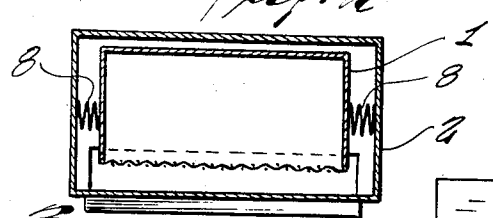

Fig. 3

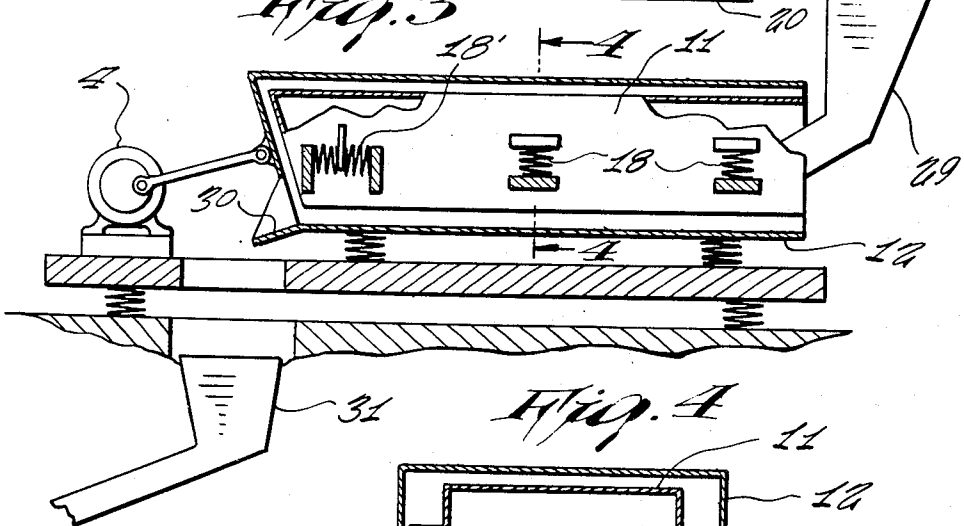

Fig. 4

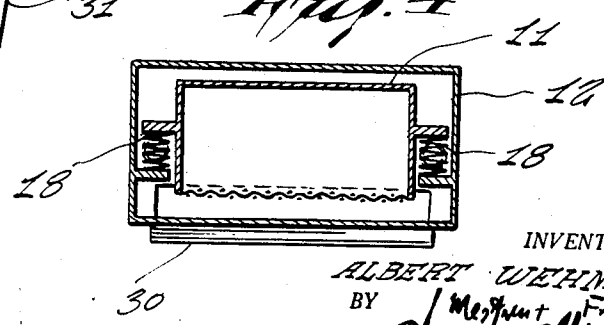

INVENTOR.
ALBERT WEHNER
BY Mestrent + Frey
Armand E. Mestrent
ATTORNEY

United States Patent Office 2,831,576 Patented Apr. 22, 1958

2,831,576

SIEVING DEVICE

Albert Wehner, Neuss (Rhine), Germany, assignor to Brueckenbau Flender G. m. b. H., Dusseldorf, Germany

Application July 28, 1955, Serial No. 524,905

Claims priority, application Germany April 2, 1955

5 Claims. (Cl. 209—365)

The present invention relates to a sieving device with a sieving box mounted for reciprocating movement and a sifter arranged in the box which is vibrated from the box by means of resilient coupling elements.

In the known devices of this kind, in which a sifter proper is not directly vibrated but is moved by way of the sieving box, the sifter is so mounted and connected to the box, that the sifter will be reciprocated in a movement corresponding to that of the box, however with a phase displacement. The latter movement is carried out in such a manner that the entire sifter is moved parallel to itself, that is to say, that all zones of the sifter will have the same form of vibration, for instance circular or elliptical vibration. The impulses transmitted to the material to be sieved, will then be the same all over. This, however, has a certain inconvenience. Whereas the material constantly undergoes changes in the composition during the sieving process, the sieving motion remains the same, so that the vibration will not correspond to the changed composition of the material. For instance, after the material has been fed to the sieving device, the first object is a thorough loosening thereof, whereas toward the end the object is rapid discharge. Consequently, at the discharge end of the sieving device, the impulse of motion should be in the direction of the discharge of the sieved material.

It is, therefore, the main object of the present invention to provide a sieving device in which the sifter will in all its zones have a reciprocating movement which is most favorable to the composition of the material in each particular zone.

As mentioned before, the device according to the invention is of the type in which the sifter is yieldingly connected by resilient coupling elements to the sieving box, which transmits the vibrations.

According to the invention the said coupling elements are either differently shaped or asymmetrically arranged or both, in such a manner that the individual zones of the sifter are capable of undergoing different vibrations.

If, for instance, according to the invention, coupling elements are used at the feed end which have a small spring characteristic or a soft spring action, such elements being preferably rubber buffers, whereas at the discharge end of the sieve bottom coupling elements with a large spring characteristic, i. e. hard spring action are used, those parts of the sifter near the feed-in will vibrate vertically with comparatively large amplitudes, whereas the zones of the sifter at the discharge end will vibrate horizontally with comparatively small amplitudes. As a consequence, the material under treatment will be essentially loosened at the feed-in side, with a low energy unput, whereas it will mainly be moved toward the exit opening at the discharge end of the sieve.

An asymmetrical connection of the sifter to the sieve box may be effected according to another embodiment of the invention by spacing the coupling elements for different distances; for instance, by spacing them further apart at the feed-in side than at the discharge side.

Finally, according to yet another embodiment of the invention, the arrangement is so made that some coupling elements are subjected mainly to thrust, whereas others are mainly subjected to compression or tension. In rubber buffers or helical springs this can be effected by arranging them so that their axes are arranged in different orientations, for instance, by mounting some coupling elements with their axes in vertical direction, others with their axes in horizontal direction.

The invention will now be more fully described with reference to the accompanying drawing, which illustrates two embodiments of the invention by way of exemplification and not of limitation and it should be understood that many changes can be made in the details without departing from the spirit of the invention.

In the drawing,

Fig. 1 shows diagrammatically a sieve, according to the invention, in side elevation;

Fig. 2 shows the same embodiment in section along line 2—2 of Fig. 1;

Fig. 3 illustrates another embodiment of the sieve according to the invention in side elevation; and

Fig. 4 shows the same embodiment in section along line 4—4 of Fig. 3.

In the sieving device, according to Fig. 1, the sifter is designated by **1**, the sieve box by **2**. The sieve box is mounted on a base plate **5** by means of springs **3**. Also mounted on base plate **5** is a motor **4** which is the drive means for vibrating the sieve box **2**. Below the plate **5** is a foundation **7** which is spaced from plate **5** by means of springs **6**. A hopper for feeding-in the goods to be screened is shown at **10**, a discharge at **20** and a chute at **21**.

As shown in Fig. 2, yielding coupling elements **8**, preferably rubber buffers or springs, are arranged between the sifter **1** and the sieve box **2** whereby transmission of the vibration is effected to the sifter as soon as a vibratory motion is transmitted from motor **4** to sieve box **2**.

As shown in Fig. 1, the coupling elements **8** and **8'** are asymmetrically arranged so that the sifter **1** will receive uneven vibration impulses when the sieve box **2** is actuated and, as a result thereof, individual zones of the sifter will be caused to carry out varying oscillations. As shown in Fig. 1, the coupling elements **8'** which are near the feed end **10** of the device, are spaced at wider intervals than the coupling elements **8** near the discharge **20** of the device. As a consequence, the sifter **1** will vibrate substantially vertically, as shown by arrow C, whereas in part B the sifter will vibrate horizontally as indicated by arrow D. This is a simplification, since actually the sifter is vibrated elliptically, with the axis of the ellipse in zone A being comparatively steep, and that at the discharge end comparatively flat.

Due to this arrangement, the goods to be sieved are considerably loosened at the feed side, whereas they are gradually advanced at a higher rate as they move toward the discharge end of the device. It may, of course, in some cases be advantageous to make the opposite arrangement, that is to say, to have the zones of the sifter describe larger amplitudes towards the discharge end of the device.

In the embodiment shown in Fig. 3, the asymmetrical operation of the sifter **11** in box **12** is brought about by arranging the coupling elements **18** and **18'** with their axes in different orientation. Whereas the coupling elements **18** have their axes vertically oriented and are therefore undergoing tension or compression, the coupling element **18'** is so arranged between the sieve box **12** and

the sifter 11 that it will primarily undergo compression. The arrangement of the coupling elements, therefore, will be asymmetrical, and the sifter will consequently carry out asymmetrical vibrations as desired. In this embodiment, the hopper is designated by 29, the discharge member by 30 and the chute by 31.

What I claim is:

1. A sieving device comprising a sieve box, means for vibrating said sieve box, a sifter arranged in said box, and resilient coupling means for transmission of vibrations from the sieve box to the sifter, wherein coupling elements are arranged at differently spaced intervals at the two ends of the sieving device.

2. A sieving device comprising a sieve box, means for vibrating said sieve box, a sifter arranged in said box, and resilient coupling means for transmission of vibrations from the sieve box to the sifter, wherein coupling elements are arranged at differently spaced intervals at the two ends of the sieving device, said coupling elements at the feed end of the device being spaced wider than at the discharge end of the device.

3. A sieving device according to claim 1, wherein said coupling elements are subjected mainly to thrust.

4. A device according to claim 1, wherein the coupling means are of rubber.

5. A sieving device according to claim 1, wherein the coupling means are helical springs.

References Cited in the file of this patent

UNITED STATES PATENTS

1,293,584	Vettermann	Feb. 4, 1919
2,204,379	Overstrom	June 11, 1940

FOREIGN PATENTS

628,191	Germany	Mar. 30, 1936