June 22, 1954 H. C. VAN TASSEL 2,681,984

DIRECTIONAL CONTROL SYSTEM FOR RAILWAY TRACK CIRCUITS

Filed Oct. 14, 1950

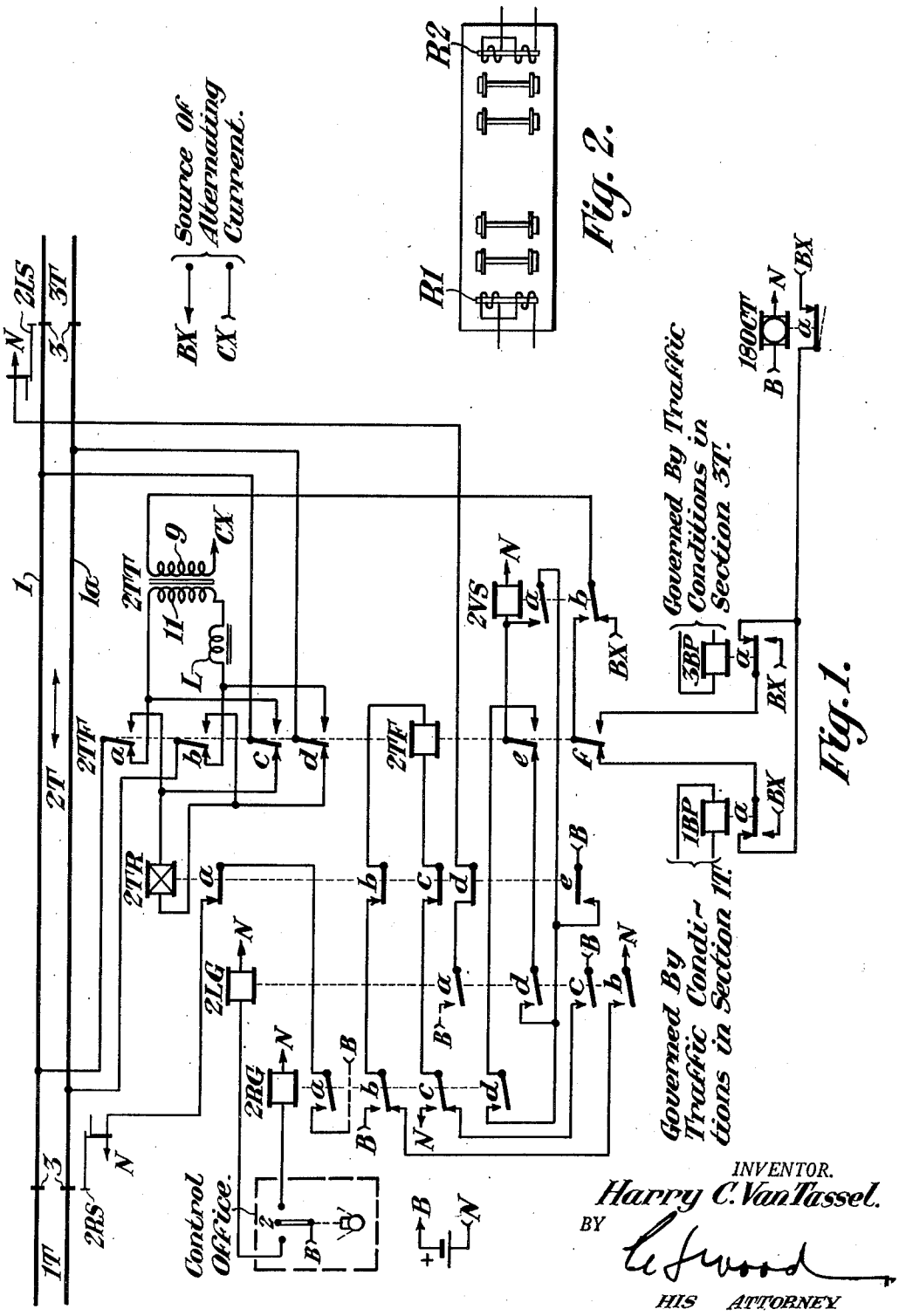

INVENTOR.
Harry C. Van Tassel.
BY
HIS ATTORNEY

Patented June 22, 1954

2,681,984

UNITED STATES PATENT OFFICE

2,681,984

DIRECTIONAL CONTROL SYSTEM FOR RAILWAY TRACK CIRCUITS

Harry C. Van Tassel, Edgewood, Pa., assignor to Westinghouse Air Brake Company, a corporation of Pennsylvania

Application October 14, 1950, Serial No. 190,181

10 Claims. (Cl. 246—23)

1

My invention relates to directional control systems for railway track circuits, and particularly to an improved system for supplying train control energy to a railway track circuit through which traffic may move in either direction.

Train control as herein used implies the use of apparatus for inductively transferring energy from the rails of a section of track to a train moving thereon to reflect the condition existing on the track in advance of a train. The train carried apparatus may include brake applying devices or cab signals or both.

In railway signaling systems the stretch of railway track to be protected is formed into successive track sections by the use of insulated rail joints and as here used the track section is defined as a given length of track, the rails of which are electrically insulated from the remaining portion of the track by insulated rail joints. In train control systems of the well-known continuous inductive type the train control energy, which is an alternating or periodic current, is supplied across the rails at the exit end of a track section so that the current flows down one rail, through the train shunt, and back over the other rail. As a result, when traffic moves over a stretch of track in either direction, in addition to a source of train control energy, a directional control system must be provided to selectively connect the source of energy to the rails at one end of the section or the other, according to the direction the train is moving through the track section.

Ordinarily, each track section of the stretch of track is provided with a track circuit to detect the presence of a train. Each of these track circuits includes a source of current connected across the rails at one end of the section and a track relay connected across the rails at the other end of the section, the relay being energized when the section is unoccupied and shunted when a train moves through the section. When train control equipment is used, the source of current provided for each track circuit is preferably of a character effective to control both the track relay and the train carried equipment and accordingly the source for the track circuit energy must be located at the exit end of the section. It follows that in territory provided with continuous inductive train control and through which territory trains move in either direction, the track relay and the current source must be selectively connected to opposite ends of the section according to the direction in which traffic is moving through the section.

In continuous inductive train control systems

2

a pair of inductors, more commonly called receivers, are mounted on the train ahead of the leading pair of wheels, one over each rail in such manner as to be in an inductive relationship with the rails. Each receiver picks up energy due to the alternating or periodic train control currents supplied to the track circuit of that section. The two receivers are connected together so that the energy induced in the receivers when current flows at any given time in opposite directions through the two rails will be additive. The train carried equipment is connected to the two receivers and is adjusted to be effectively influenced by the induced energy in the receivers when a given minimum value of current flows in the rail. Such a system is shown and described in Letters Patent of the United States No. 1,986,679, granted to L. V. Lewis on January 1, 1935, for Railway Traffic Controlling Apparatus.

Vehicles or trains which operate in either direction without being turned around, such as subway vehicles, or the so called "multiple unit trains," in which each vehicle or each train has control cabs at each end to provide "double end control," are provided with a set of receiving coils at each end of the vehicle. The two sets of receiving coils may be connected to separate sets of train control apparatus or to a single set of apparatus through a selector switch in accordance with the direction in which the vehicle or train is moving. Thus, the cab signal or train control equipment is effective for operation of the train or vehicle in either direction, provided that the train control energy is supplied at the exit end of the section through which the train or vehicle is moving, so as to induce energy in the receiving coils located ahead of the first wheels of the train or vehicle. Such a "double end control" system is shown and described in Letters Patent of the United States No. 1,720,225, granted to L. V. Lewis on July 9, 1929, for Railway Traffic Controlling Apparatus.

In accordance with the foregoing, it has previously been proposed to provide means for selectively supplying train control energy, in addition to track circuit energy, to one end or the other of the track section from sources located at the opposite ends of the section, and to selectively connect to the opposite end of the track section from the source, one or the other of two track relays.

However, through interlocking plants and other stretches of track where the track sections are relatively short in length, it is desirable in the interests of economy to provide but one track

relay and one source of train control energy and track circuit energy per track section, and to selectively connect this apparatus to the track section in accordance with the direction of traffic moving through the section. Such an arrangement must be so constituted that the apparatus will not become improperly connected with the track section, and must meet the usual "closed circuit" safety requirements of railway signaling systems. Moreover, in the case of vehicles equipped with train control apparatus, it is essential to good operation to provide a system which will not cause unnecessary brake applications should the supply of energy governing the directional control system be interrupted for a short interval.

Accordingly, it is an object of my invention to provide an improved directional control system for railway track circuits, arranged so that the deenergization of the apparatus or improper energization of the apparatus will not cause improper operation thereof.

Another object of my invention is to provide an improved directional control system for reversible railway track circuits, employing a polar traffic relay to govern the selection of the track circuit connections, and arranged to cut off the supply of energy to the traffic relay when the track section is occupied, to prevent improper operation of the relay.

A further object of my invention is to provide an improved system of the type described in which the contacts of the polar traffic relay are checked for proper positioning before train control energy can be supplied to the track sections.

Other objects of my invention and features of novelty thereof will become apparent from the following description taken in connection with the accompanying drawings.

In practicing my invention, I provide a traffic relay of the polar type, having "stay-where-put" contacts, that is, contacts which when the relay becomes deenergized remain in the position to which they were last moved by energization of the relay. The winding of the polar traffic relay is supplied with energy of one polarity or the other in accordance with the direction in which traffic is to move through the associated track section, and the energizing circuit may be governed by any suitable means in this connection, such as, for example, signal control relays governing signals for movement of traffic in the opposite directions through the associated track sections.

A first set of contacts of the polar traffic relay is provided for connecting a track relay to one end or the other of the associated track section, in accordance with the position of the contacts of the relay. A second set of contacts of the traffic relay is provided for connecting a source of train control and track circuit energy to one end or the other of the associated track section, and the circuits are arranged so that the track relay and the source of train control and track circuit energy are at all times connected to opposite ends of the track circuit. Contacts of the track relay are interposed in the circuit for supplying energy to the operating winding of the polar traffic relay, so that the traffic relay cannot be operated during such times as the track relay is released, denoting the occupancy of the track section by a train. Additionally, I provide a train control energizing relay which is governed by contacts of the traffic relay and contacts of the relays which determine the direction of traffic movement through the associated track section, the circuits

being arranged so that train control energy cannot be supplied to the track section unless the contacts of the polar traffic relay are in such positions as to insure that train control energy will be supplied to the end of the section which is the exit end for the particular direction of traffic through the section at that time. Moreover, I provide a circuit for supplying train control energy to the track circuit which includes contacts of the polar traffic relay to select proper circuits for supplying train control energy to the track, so that the train control energy thus supplied will reflect traffic conditions ahead of the associated section, for the particular direction of traffic movement involved.

I shall describe one form of directional control system for railway track circuits embodying my invention and shall then point out the novel features thereof in claims.

In the accompanying drawings, Fig. 1 is a diagrammatic view of a stretch of railway track equipped with a signaling system embodying my invention, showing the associated wayside circuits and apparatus.

Fig. 2 is a diagrammatic view of the under side of a "double end control" vehicle, showing the disposition of receiving coils at each end of the car.

In this application only the portion of the wayside apparatus essential for an understanding of this invention has been shown. The apparatus which is not shown is of well-known construction and may be arranged in any one of several ways well understood in the railway signaling art.

Referring to Fig. 1, I have shown a section of single track over which traffic may move in either direction as indicated by the two-headed arrow. The track is divided by means of the insulated joints 3 into sections such as 1T, 2T and 3T, of which only the apparatus associated with section 2T is shown in full, but it is to be understood that the adjacent sections 1T and 3T may be equipped with apparatus similar to that associated with section 2T. The movement of traffic into section 2T is governed by two wayside signals, 2RS, and 2LS, which govern trains moving from left to right, and from right to left, respectively.

The apparatus associated with section 2T comprises a track relay 2TR, here shown as being of the alternating current type responsive to steady alternating current energy only, a track traffic relay 2TF, of the polar type having "stay-where-put" contacts, a track transformer 2TT and a limiting impedance L for supplying energy of suitable value to the track circuit, a train control energizing relay 2VS, which serves to connect the source of train control energy to the track circuit at times, two signal control relays 1BP and 3BP governed by traffic conditions in section 1T and section 3T, respectively, a coding device 180CT of the type well known in the art for supplying coded energy to the associated circuits and two signal clearing or route selecting relays 2LG and 2RG, which select the direction in which traffic is to move through section 2T. Energy for the operation of the relays other than relay 2TR is furnished by a suitable source of direct current, such as the battery shown, the positive terminal of which is designated by the reference character B and the negative terminal of which is designated by the reference character N. Alternating current energy for the operation of the track relay 2TR and to provide a supply of coded energy over the contact of the coding device is furnished from a suitable source of alternating

current, not shown, the terminals of which are designated by the reference characters BX and CX.

The route selecting or signal clearing relays 2LG and 2RG may be controlled in any suitable manner to govern the direction of traffic movements through the section 2T, and are here shown as being controlled by the operation of a manual control lever 2 located at a control office which, in turn, may be located near section 2T, or at some remote point. When the lever 2 is moved to the left, relay 2LG is energized by an obvious circuit to prepare the section 2T for traffic movement from right to left, and when lever 2 is placed in the right hand position, relay 2RG is energized to prepare the section 2T for traffic movement from left to right. Although the circuits for controlling the relays 2LG and 2RG from lever 2 are here shown as direct-wire manually-controlled circuits, it will be readily understood by those skilled in the art that the relays 2LG and 2RG may be controlled by the lever 2 through the medium of any of the well-known remote control code systems, such as, for example, the system shown and described in Letters Patent of the United States No. 2,229,249, granted to L. V. Lewis on January 21, 1941, for Remote Control Systems, or the relays may be operated automatically in accordance with the approach of trains in the sections adjacent the section 2T.

As shown in the drawing, the apparatus is in its normal condition, and steady alternating current energy is supplied at this time to the primary winding 9 of transformer 2TT by a circuit including back contact *b* of relay 2VS, which is released, so that the alternating current energy thus flowing in the primary winding 9 of transformer 2TT induces energy in the secondary winding 11 of the transformer. This energy is supplied to the rails 1 and 1*a* of section 2T at the left hand end of the section by a circuit including the limiting reactance L, and the contacts *a* and *b* of relay 2TF in their normal, or left hand position. Energy thus supplied to the left hand end of section 2T flows over the section rails to the right hand end of the section, and thence over contacts *c* and *d* of relay 2TF in their normal position to the winding of track relay 2TR, so that relay 2TR is energized and its contacts are picked up at this time. As previously pointed out, the track traffic relay 2TF is of the polar type, and its contacts remain in the position to which they were last operated when the relay is deenergized.

It will now be assumed that a train movement is to be made through section 2T from left to right, past signal 2RS. Accordingly, the control lever 2 is moved to its right hand position, to thereby energize the route selecting relay 2RG. When relay 2RG picks up, a circuit is established for reversing the contacts of the polar traffic relay 2TF, which circuit may be traced from terminal B at front contact *b* of relay 2RG, over front contact *b* of relay 2TR, the winding of relay 2TF from right to left, front contact *c* of relay 2TR, and front contact *c* of relay 2RG to terminal N. The relay 2TF is constructed and arranged so that when energy flows through the operating winding from right to left, the contacts of the relay move from their left hand or normal position, to their right hand or reverse position.

When the contacts *a* and *b* of relay 2TF move to their reverse position, the track transformer 2TT is disconnected from the left hand end of section 2T, and the winding of track relay 2TR is connected to the left hand end of the section over the reverse contacts *a* and *b* of relay 2TF. Additionally, when contacts *c* and *d* of relay 2TF move to their reverse position, the winding of relay 2TR is disconnected from the right hand end of the section 2T, and the secondary winding 11 of the track transformer is connected to the right hand end of the section over reverse contacts *c* and *d* of the polar relay. These connections will be quite obvious from an inspection of the drawing. Accordingly, it will be seen that the direction of energization of the track circuit 2T is reversed when the polar traffic relay 2TF reverses its contacts. Polar relays of the type employed for the traffic relay 2TF are characterized by rapid reversal of the contacts in response to energization of the operating winding, and the speed of operation of the contacts is sufficiently fast so that relay 2TR will not be released during the time that its connections are being transferred from one end of the track circuit to the other.

At this time, with front contact *a* of relay 2RG closed, and front contact *a* of relay 2TR closed, a circuit is established for supplying energy to the signal 2RS, which circuit may include contacts of relays governed by traffic conditions in advance of signal 2RS as indicated by the dotted line extending from front contact *a* of relay 2RG to terminal B. The actual control of the signal 2RS forms no part of my invention and therefore is not shown in detail. The completion of this circuit causes the signal 2RS to go to clear, for the train approaching section 2T.

When the train moving from left to right passes the wayside signal 2RS, and enters the track section 2T, the wheels and axles of the train shunt the track circuit, and the track relay 2TR accordingly releases its contacts. When contact *a* of relay 2TR releases, it interrupts the circuit for controlling signal 2RS thereby restoring this signal to stop. Additionally, when contacts *b* and *c* of relay 2TR release, the circuit for supplying energy to the winding of relay 2TF, which was previously traced, is interrupted, but since the contacts of relay 2TF are of the "stay-where-put" variety, they will remain in their reverse position at this time.

When the train enters section 2T and shunts relay 2TR, a pick up circuit is established for the train control energizing relay 2VS, which circuit may be traced from terminal B at back contact *e* of relay 2TR, over front contact *d* of relay 2RG, reverse contact *e* of relay 2TF, and the winding of relay 2VS to terminal N. When relay 2VS picks up, its front contact *a* establishes a stick circuit for the relay including back contact *e* of relay 2TR, so that relay 2VS remains picked up while the track section is occupied. It will be seen that the relay 2VS cannot pick up unless the position of the contacts of the traffic relay 2TF are in correspondence with the appropriate route relay, in this case relay 2RG, thereby insuring that train control energy will not be supplied to the track circuit unless the direction of energization of the track circuit corresponds to the direction set up by the route control relay.

When relay 2VS picks up, its front contact *b* establishes a circuit for supplying coded energy to the primary winding 9 of transformer 2TT. This circuit may be traced from terminal BX at contact *a* of coding device 180CT, over front contact *a* of relay 3BP, reverse contact *f* of relay 2TF, front contact *b* of relay 2VS, and the pri-

mary winding 9 of track transformer 2TT to terminal CX. The coding device 180CT may be of the well-known pendulum type, and has its operating winding continuously connected to the source of direct current. This device is constructed and arranged so that its contact *a* recurrently opens and closes at a predetermined rate, for example, 180 times per minute. The relay 3BP is governed by traffic conditions in section 3T, and assuming that these conditions are such that the train may advance into the section 3T, front contact *a* of relay 3BP will be closed.

The supply of impulses of alternating current at the rate of 180 per minute to the primary winding 9 of transformer 2TT causes energy to be supplied at the rate of 180 impulses per minute from the secondary winding 11 of transformer 2TT through the limiting reactance L, and over reverse contacts *c* and *d* of relay 2TF to the rails 1 and 1*a* of section 2T in advance of the train moving through the section.

If it is assumed that a vehicle of the type shown in Fig. 2, having receiver coils R1 and R2 located at the opposite ends of the vehicle, is moving through section 2T, the impulses of alternating current energy will induce energy in the receiving coils at the forward end of the vehicle to influence the train control or cab signals on the vehicle which are effective for the direction in which the train is moving. It is to be understood that the supply of coded energy to the track section 2T is not limited to the supply of energy of one frequency only, as shown, but may be arranged to include a plurality of frequencies, to denote various traffic conditions ahead of the train, such arrangements being well known in the art.

When the train moves into section 3T, relay 3BP will be released, since section 3T is then occupied, and release of a contact *a* of relay 3BP will cut off the supply of coded energy to the primary winding 9 of the track transformer 2TT and steady energy will now be supplied to the winding of the transformer over back contact *a* of relay 3BP, by a circuit which may be traced from terminal BX at back contact *a* of relay 3BP, over reverse contact *f* of relay 2TF, front contact *b* of relay 2VS, and the winding 9 of transformer 2TT to terminal CX. When the rear of the vehicle vacates section 2T, this steady alternating current energy will flow to the track rails 1 and 1*a* of the section over contacts *c* and *d* of relay 2TF in their reverse position, and to the winding of track relay 2TR over contacts *a* and *b* of relay 2TF in their reverse position so that relay 2TR will pick up its contacts.

When contact *e* of relay 2TR picks up, it interrupts the stick circuit for supplying energy to the winding of relay 2VS, and relay 2VS will release its contacts. When contact *b* of relay 2VS releases, it interrupts the previously traced circuit for supplying energy to the track transformer 2TT including the contact *f* of relay 2TF, and the supply of steady alternating current energy to transformer 2TT over back contact *b* of relay 2VS is resumed, to thereby keep relay 2TR energized as was originally described.

If the relay 2RG is picked up at this time, when front contacts *b* and *c* of relay 2TR are closed by the picking up of relay 2TR, energy will again be supplied to the operating winding of relay 2TF, but since this energy flows through the winding of relay 2TF in the same direction as previously described, the contacts of relay 2TF will not move from their reverse position. If the control lever 2 is restored to its normal position, either before or after the relay 2TR picks up upon a train leaving the section 2T, no energy will be supplied to the winding of relay 2TF and since the contacts of the relay are of the "stay-where-put" variety, they will remain in their reverse position.

It will now be assumed that a movement is to be made through section 2T from right to left, past signal 2LS. Accordingly, the control lever 2 is moved to its left hand position, to thereby energize the route selecting relay 2LG.

When relay 2LG picks up, a circuit including front contact *a* of relay 2LG and a front contact *d* of track relay 2TR is closed to energize the signal 2LS, the circuit including contacts of other relays in advance of section 2T, as indicated by the dotted line between terminal B and front contact *a* of relay 2LG. The energization of the signal by this circuit causes the signal to clear for the approaching train. As was previously pointed out in connection with signal 2RS, the actual manner of controlling the wayside signal 2LS does not form part of my invention and it is therefore not necessary to describe such circuits in detail.

When contacts *b* and *c* of relay 2LG pick up, a circuit is established for supplying energy to the operating winding of traffic relay 2TF, which circuit may be traced from terminal B at front contact *c* of relay 2LG, over back contact *c* of relay 2RG, front contact *c* of relay 2TR, the winding of relay 2TF from left to right, front contact *b* of relay 2TR, back contact *b* of relay 2RG, and front contact *b* of relay 2LG to terminal N. The flow of current through the operating winding of relay 2TF from left to right causes the contacts of the relay to move from their reverse to their normal position. With the contacts of relay 2TF in their normal position, as shown in the drawing, the secondary winding 11 of track transformer 2TT is connected to the left hand end of section 2T through the limiting reactor L and normal contacts *a* and *b* of relay 2TF, while the winding of track relay 2TR is connected to the rails at the right hand end of section 2T over normal contacts *c* and *d* of relay 2TF. As was previously pointed out, the operation of relay 2TF is sufficiently rapid so that relay 2TR does not release during the time in which its connections are being transferred from one end of the track circuit to the other.

At this time, therefore, with the wayside signal 2LS cleared for a train moving from left to right, the track circuit 2T will be supplied with energy at the left hand end of the section, and the track relay 2TR will be connected at the right hand end of the section.

When the train passes signal 2LS and enters section 2T, the wheels and axles of the train shunt the supply of energy from the winding of relay 2TR, and its contacts release. When contact *b* of relay 2TR releases, it interrupts the circuit for governing signal 2LS, and this signal is restored to stop. The release of front contacts *b* and *c* of relay 2TR cut off the supply of energy to the winding of relay 2TF, so that this latter relay cannot be energized to change the direction of energization of the track circuit during the time that the track circuit is occupied. When back contact *e* of relay 2TR closes upon release of the relay, a circuit is established for energizing the train control energization relay 2VS, which circuit may be traced from terminal B at back contact *e* of relay 2TR, over front contact *d* of

relay 2LG, normal contact *e* of relay 2TF, and through the winding of relay 2VS to terminal N. When the contacts of relay 2VS pick up, the front contact *a* of the relay establishes a stick circuit including the back contact *e* of relay 2TR to retain the relay 2VS picked up during the time that the track section is occupied. It will be seen that the manner of checking the correspondence between the signal control relay and the track traffic relay is similar to that previously described in connection with relay 2RG and the reverse position of the contacts of the relay 2TF. Accordingly, before train control energy can be supplied to the track circuit the apparatus is checked to insure that the energy will be supplied at the proper end of the track section, in accordance with the direction in which traffic is moved through the section. The stick circuit of relay 2VS is provided in order that the train control energy may be continuously supplied while the train occupies section 2T, since it is possible that the manual control lever 2 may be restored to its normal or center position during the time that a train occupies the section, in which case the pick up circuit for relay 2VS including the contact *d* of relay 2LG or 2RG would be open. However, in such instance, the stick circuit including front contact *a* of the relay 2VS keeps this relay energized as long as the train is in the section. When front contact *b* of relay 2VS picks up, it establishes a circuit for supplying coded alternating current energy to the primary winding 9 of track transformer 2TT by a circuit which may be traced from terminal BX at front contact *a* of coding device 180CT, over front contact *a* of relay 1BP, which relay is governed by traffic conditions in section 1T, normal contact *f* of relay 2TF, front contact *b* of relay 2VS and the primary winding 9 of transformer 2TT to terminal CX. Accordingly, alternating current energy impulses at the rate of 180 per minute will be induced in the secondary winding 11 of transformer 2TT and will be supplied through the reactor L over contacts *a* and *b* of relay 2TF to the left hand end of section 2T. These impulses traverse the rails of section 2T to thereby influence the cab signal or train control equipment on the train moving through the section from left to right.

When the train moves through section 2T and enters section 1T, the relay 1BP will be released, cutting off the supply of coded alternating current energy to the track transformer 2TT and substituting therefore steady alternating current energy, over the back contact *a* of relay 1BP, normal contact *f* of relay 2TF and front contact *b* of relay 2VS. When the rear of the train vacates section 2T, the steady alternating current energy supplied to the track rails at the left hand end flows over the track rails and thence over normal contacts *c* and *d* of relay 2TF to the winding of relay 2TR, so that relay 2TR picks up its contacts. When contact *e* of relay 2TR picks up, it interrupts the stick circuit for relay 2VS, and relay 2VS releases its contacts. The release of contact *b* of relay 2VS establishes the supply of steady alternating current energy over the back contact *b* of the relay to the primary winding 9 of transformer 2TT, so that the track circuit remains energized with steady alternating current energy and relay 2TR remains picked up. At this time the apparatus is restored to its normal condition as originally described.

From the foregoing, it will be seen that the directional control system arranged in accordance with my invention provides a simple and reliable means for governing the direction or energization of the railway track circuit, in order that train control or cab signal energy may be applied to the exit end of the section for the particular direction in which traffic is to move through the section. It will also be seen that the apparatus arranged in accordance with my invention is not liable to be operated erroneously since the traffic relay 2TF cannot be operated during the time a train occupies the track section. This is of particular importance where the trains operating over the track section equipped with this apparatus are provided with automatic train control equipment, since a momentary interruption in the supply of train control energy would cause an emergency application of the train brakes, which is undesirable. Additionally, the arrangement shown and described provides the additional feature of checking the correspondence of the traffic relay and the route control relay before train control energy can be applied to the track circuits, in order to insure that the track circuit is set up in the proper direction for movement of traffic through the stretch, by providing a correspondence check of the contacts of the traffic relay and the route control relays in the pick up circuit of the train control energizing relay 2VS.

Although I have herein shown and described only one form of directional control systems for railway track circuit embodying my invention, it is to be understood that various changes and modifications may be made therein within the scope of the appended claims without departing from the spirit and scope of my invention.

Having thus described my invention, what I claim is:

1. A directionally controlled railway track circuit comprising a traffic relay having contacts operated between a first and a second position in accordance with the polarity of the energy supplied to an operating winding of the relay, a section of track, route selecting means for determining the direction in which traffic is to move through the section, first circuit means governed by said route selecting means for supplying energy of one polarity or the other to the operating winding of said relay in accordance with the direction of traffic through said section, a track relay having contacts which are picked up or released according as said section is unoccupied or occupied, a source of energy effective to energize said track relay, second circuit means governed by said traffic relay for reversibly connecting said track relay and said source of energy to opposite ends of said section in accordance with the direction in which traffic is to move through said section, and means governed by said track relay for rendering said first circuit means ineffective to operate said traffic relay when said section is occupied by a train.

2. A reversible railway track circuit comprising, in combination, a section of railway track, a source of electrical energy, a track relay having contacts which are picked up or released according as energy from said source is or is not supplied to a winding of said relay, a polar traffic relay having contacts operated between a first and a second position in accordance with the polarity of the energy supplied to an operating winding of the relay, said contacts remaining in the position to which they were last moved when the supply of energy to the winding of the relay is cut off, means for energizing said traffic

relay with energy of one polarity or the other in accordance with the direction in which traffic is to move through said section, means governed by the contacts of said traffic relay for reversibly connecting said track relay and said source of energy to opposite ends of said section in accordance with the direction in which traffic is to move through said section, and means for deenergizing said traffic relay when the contacts of said track relay are released.

3. In a reversible railway track circuit including a track section, a track relay, and a source of track circuit energy, the combination with the foregoing of a directional control system for reversibly connecting the track relay and the source of track circuit energy to opposite ends of the track section, comprising a polar traffic relay having contacts which are operated to one or the other of their two positions in accordance with the polarity of the energy supplied to a winding of the relay, said contacts remaining in the position to which they were last operated when the supply of energy to the relay winding is cut off, a first and a second route selecting relay, first circuit means governed by said route selecting relays for supplying energy of one polarity or the other to the winding of said traffic relay in accordance with the direction in which traffic is to move through the track section, said track relay having front contacts which are closed when energy is supplied to the winding of the relay, second circuit means including contacts of said traffic relay for connecting the winding of said track relay to one end or the other of said section, third circuit means including contacts of said traffic relay for connecting said source of track circuit energy to the end of the track section opposite the end to which said track relay is connected, and means including a front contact of said track relay for rendering said first circuit means ineffective for operating said traffic relay when said track relay is deenergized.

4. In a reversible railway track circuit including a track section, a track relay, and a source of track circuit energy, the combination with the foregoing of a directional control system for reversibly connecting the track relay and the source of track circuit energy to opposite ends of the track section, comprising a polar traffic relay having contacts which are operated to one or the other of their two positions in accordance with the polarity of the energy supplied to a winding of the relay, said contacts remaining in the position to which they were last operated when the supply of energy to the relay winding is cut off, a first and a second route selecting relay, first circuit means including contacts of said first route selecting relay and contacts of the track relay for supplying energy of one polarity to the winding of said traffic relay, second circuit means including contacts of said second route selecting relay and contacts of the track relay for supplying energy of the other polarity to said traffic relay, and third circuit means including contacts of said traffic relay for reversibly connecting the track relay and the source of track circuit energy to opposite ends of the track section.

5. In combination, a section of railway track, a track relay for said section, a source of track circuit energy effective to energize said track relay, a source of train control energy effective to govern train carried apparatus on trains moving through said section when said train control energy is supplied to the rails at the exit end thereof, and means for reversibly connecting said track relay to one end of said section and reversibly connecting said source of track circuit energy and said source of train control energy to the opposite end of the track section, comprising a polar traffic relay having contacts which are operated to one or the other of their two positions in accordance with the polarity of energy supplied to the operating winding of the relay, said contacts remaining in the position to which they were last operated when the supply of energy to the relay winding is cut off, route selecting means for determining the direction in which traffic is to move through the section, first circuit means governed by said route selecting means for energizing the operating winding of the traffic relay with energy of one polarity or the other in accordance with the direction in which traffic is to move through said section, second circuit means including contacts of said traffic relay for reversibly connecting said track relay and said sources of track circuit energy and train control energy to opposite ends of said section, so that said source of train control energy is connected to the rails of the section at the selected exit end of the section for the direction in which traffic is to move through the section, and third circuit means governed by said track relay for cutting off the supply of energy to the winding of said traffic relay when said section is occupied.

6. In combination, a section of railway track, a track relay for said section, a source of track circuit energy effective to energize said track relay, a source of train control energy effective to govern train carried apparatus on trains moving through said section when said train control energy is supplied to the rails at the exit end thereof, and means for reversibly connecting said track relay to one end of said section and reversibly connecting said source of track circuit energy and said source of train control energy to the opposite end of the track section, comprising a polar traffic relay having contacts which are operated to one or the other of their two positions in accordance with the polarity of energy supplied to the operating winding of the relay, said contacts remaining in the position to which they were last operated when the supply of energy to the relay winding is cut off, route selecting means for determining the direction in which traffic is move through the section comprising a first and a second route selecting relay, selectively energized in accordance with the direction in which traffic is to move through said section, each of said route selecting relays having front contacts which are closed when the relay is energized, a first circuit including a front contact of said first route selecting relay for supplying energy of one polarity to the winding of said traffic relay, a second circuit including a front contact of said second route selecting relay for supplying energy of the other polarity to the winding of said traffic relay, a third circuit including contacts of said traffic relay for connecting the winding of said track relay to one end or the other end of said track section in accordance with the position of the contacts of the traffic relay, a fourth circuit including contacts of said traffic relay for connecting said source of track circuit energy and said source of train control energy to the end of said section opposite the end to which the track relay is connected, so that said source of train control energy is connected to the section rails at the selected exit end of the section, and means

governed by the contacts of said track relay for interrupting said first and said second circuits when the track section is occupied.

7. In combination, a section of railway track, a track relay for said section, a source of track circuit energy effective to energize said track relay, a source of train control energy effective to govern train carried apparatus on trains moving through said section when said train control energy is supplied to the rails at the exit end thereof, and means for reversibly connecting said track relay to one end of said section and reversibly connecting said source of track circuit energy and said source of train control energy to the opposite end of the track section, comprising a polar traffic relay having contacts which are operated to one or the other of their two positions in accordance with the polarity of energy supplied to the operating winding of the relay, said contacts remaining in the position to which they were last operated when the supply of energy to the relay winding is cut off, route selecting means for determining the direction in which traffic is to move through the section comprising a first and a second route selecting relay, selectively energized in accordance with the direction in which traffic is to move through said section, each of said route selecting relays having front contacts which are closed when the relay is energized, a first circuit including a front contact of said first route selecting relay for supplying energy of one polarity to the winding of said traffic relay, a second circuit including a front contact of said second route selecting relay for supplying energy of the other polarity to the winding of said traffic relay, a third circuit including contacts of said traffic relay for connecting the winding of said track relay to one end or the other end of said track section in accordance with the position of the contacts of the traffic relay, a fourth circuit including contacts of said traffic relay for connecting said source of track circuit energy and said source of train control energy to the end of said section opposite the end to which the track relay is connected, so that said source of train control energy is connected to the section rails at the selected exit end of the section, and means governed by the contacts of said track relay for connecting said source of train control energy to said fourth circuit and for interrupting said first and said second circuits when said track section is occupied.

8. In combination, a section of railway track, a track relay for said section, a source of track circuit energy effective to energize said track relay, a source of train control energy effective to govern train carried apparatus on trains moving through said section when said train control energy is supplied to the rails at the exit end thereof, and means for reversibly connecting said track relay to one end of said section and said source of track circuit energy and said source of train control energy to the opposite end of the track section, comprising a polar traffic relay having contacts which are operated to one or the other of their two positions in accordance with the polarity of energy supplied to the operating winding of the relay, said contacts remaining in the position to which they were last operated when the supply of energy to the relay winding is cut off, route selecting means for determining the direction in which traffic is to move through the section comprising a first and a second route selecting relay selectively energized in accordance with the direction in which traffic is to move through said section, each of said route selecting relays having front contacts which are closed when the relay is energized, a first circuit including a front contact of said first route selecting relay for supplying energy of one polarity to the winding of said traffic relay, a second circuit including a front contact of said second route selecting relay for supplying energy of the other polarity to the winding of said traffic relay, a third circuit including contacts of said traffic relay for connecting the winding of said track relay to one end or the other end of said track section in accordance with the position of the contacts of the traffic relay, a fourth circuit including contacts of said traffic relay for connecting said source of track circuit energy and said source of train control energy to the end of said section opposite the end to which the track relay is connected, so that said source of train control energy is connected to the section rails at the selected exit end of the section, means governed by the contacts of said track relay for connecting said source of train control energy to said fourth circuit and for interrupting said first and said second circuits when said track section is occupied, and means governed jointly by said traffic relay and traffic conditions adjacent said section for governing the character of the train control energy supplied to said section.

9. In combination, a stretch of railway track divided into a first section and two adjacent sections, a track relay for said first section having contacts which are picked up when steady alternating current energy is supplied to the winding of the track relay, a source of steady alternating current energy, a coding device having a contact recurrently operated between a first and a second position at a predetermined rate, a first relay and a second relay associated with the track sections adjacent said first section, each said relay having a contact which is picked up or released in accordance with traffic conditions in its associated section, a polar traffic relay having contacts which are operated between a first position and a second position in accordance with the direction of current flow through the winding of the relay, the contacts of said traffic relay remaining in their last energized position when the supply of energy to the relay winding is cut off, a first and a second route selecting relay having contacts which are picked up in accordance with the direction in which traffic is to move through said first section, a first circuit including front contacts of said first route selecting relay and said track relay for supplying energy to the winding of said traffic relay of the polarity to cause the contacts of said traffic relay to operate to said first position, a second circuit including front contacts of said second route selecting relay and said track relay for supplying energy to the winding of said traffic relay to cause the contacts of said traffic relay to operate to said second position, a track transformer having a primary winding and a secondary winding, circuit means including contacts of said traffic relay for connecting the secondary winding of said transformer across the rails at one end of said first section when the contacts of said traffic relay are in their first position and across the rails at the other end of said first track section when the contacts of said traffic relay are in their second position, circuit means including the contacts of said traffic relay for connecting the winding of said track relay across the rails

at said other end of said first track section when the contacts of the traffic relay are in their first position and across the rails at said one end of said first track section when the contacts of the traffic relay are in their second position, means for supplying steady alternating current energy to the primary winding of said transformer when said track relay contacts are picked up, means including said coding device contact for supplying coded alternating current energy to the primary winding of said track transformer when said track relay is released and a selected one of said first or said second relays is picked up, and means for supplying steady alternating current energy to the primary winding of said track transformer when said selected one of said first or said second relay is released and said track relay is released.

10. In combination with a section of railway track, a source of train control energy, means including contacts of a polar traffic relay for reversibly connecting said source of train control energy to one end or the other end of said section in accordance with the direction in which traffic is to move through the section, a first and a second route selecting relay selectively energized in accordance with the direction in which traffic is to move through said section, first circuit means including contacts of said route selecting relays for energizing said polar traffic relay to operate the contacts of the relay between their two positions, a track relay for said section having contacts which are picked up or released according as said section is unoccupied or occupied, circuit means governed by contacts of said track relay for rendering said first circuit means ineffective to operate the contacts of said traffic

relay, and means for governing the supply of train control energy to said track section over the contacts of said polar traffic relay, comprising an auxiliary train control energizing relay, a first pick up circuit for supplying energy to the winding of said auxiliary relay including a contact of said first route selecting relay closed when the relay is energized and a contact of said polar relay closed in the position to which it is operated by energization of said first route selecting relay, a second pick-up circuit for said auxiliary relay including a contact of said second route selecting relay closed when the relay is energized and a contact of said polar relay closed in the position to which it is operated by energization of said second route selecting relay, a stick circuit for said auxiliary relay including a contact of said auxiliary relay closed when the relay is energized and a released contact of said track relay, and a contact of said auxiliary relay interposed in the circuit for supplying train control energy from said source to the track section over contacts of said traffic relay.

References Cited in the file of this patent

UNITED STATES PATENTS

Number	Name	Date
1,790,652	Brooks	Feb. 3, 1931
2,144,529	Failor	Jan. 17, 1939
2,315,038	Baughman	Mar. 30, 1943
2,344,333	Van Horn	Mar. 14, 1944
2,357,235	Jerome	Aug. 29, 1944
2,367,742	Thompson	Jan. 23, 1945
2,608,647	Johnston	Aug. 26, 1952
2,611,074	Pascoe	Sept. 16, 1952