June 8, 1943. H. F. COX, JR., ET AL. 2,321,011

CONTAINER

Filed July 19, 1941 2 Sheets-Sheet 1

Fig. 1

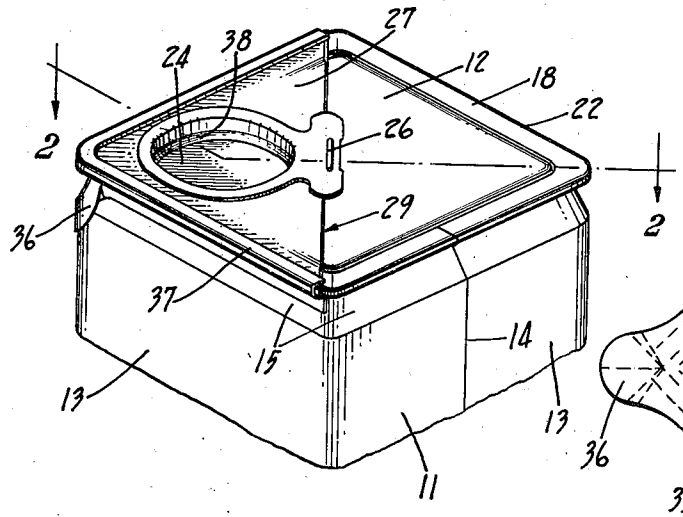

Fig. 4

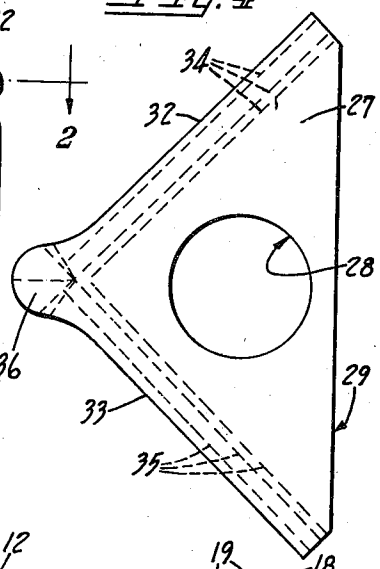

Fig. 2

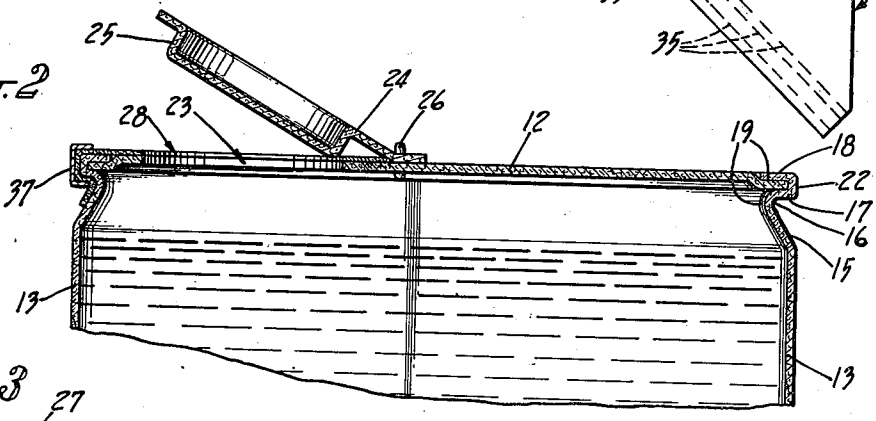

Fig. 3

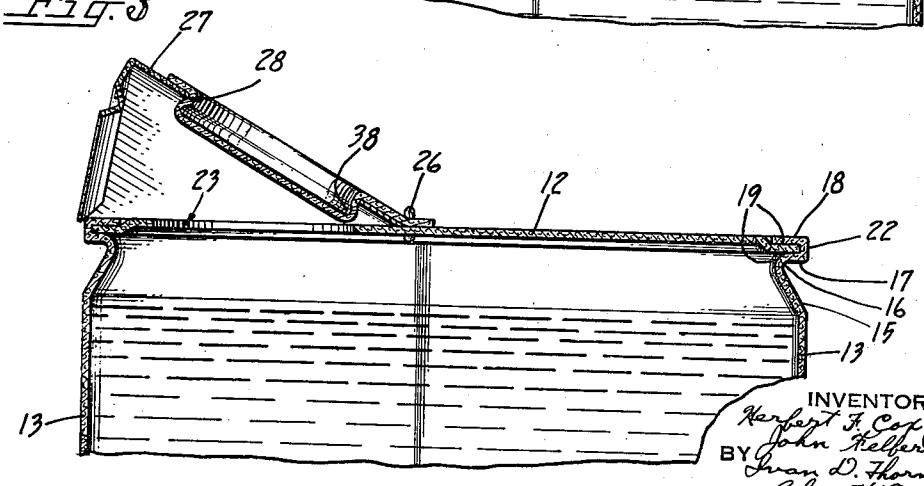

INVENTORS
Herbert F. Cox, Jr.
John Keller
BY Ivan D. Thornburgh
Chas. H. Evans
ATTORNEYS

June 8, 1943. H. F. COX, JR., ET AL 2,321,011

CONTAINER

Filed July 19, 1941 2 Sheets-Sheet 2

Fig. 5

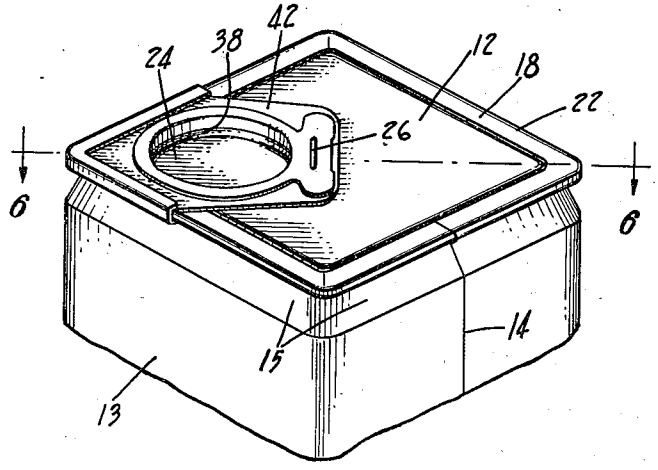

Fig. 6

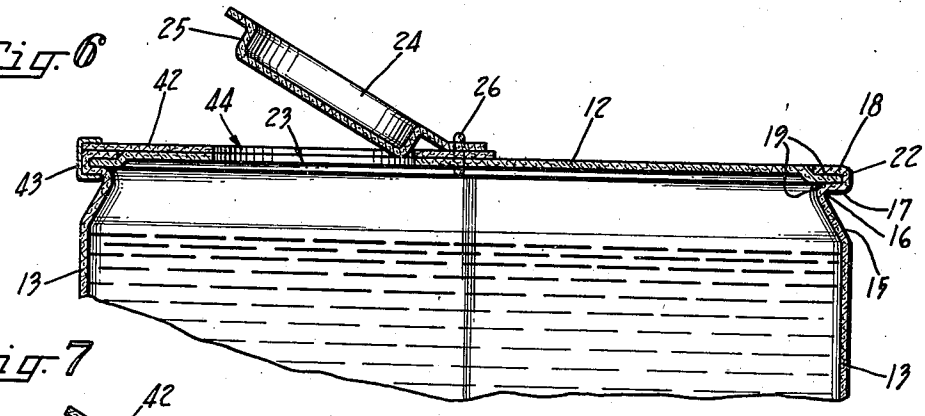

Fig. 7

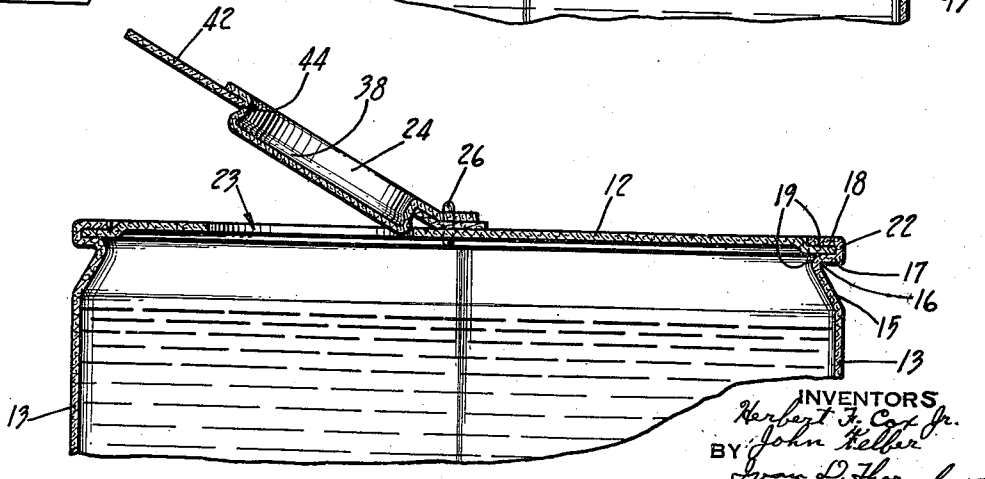

INVENTORS
Herbert F. Cox Jr.
John Kelber
BY Ivan D. Thornburgh
Chas. H. Brace
ATTORNEYS

Patented June 8, 1943 2,321,011

UNITED STATES PATENT OFFICE

2,321,011

CONTAINER

Herbert F. Cox, Jr., Murray Hill, and John Felber, Hillside, N. J., assignors to American Can Company, New York, N. Y., a corporation of New Jersey.

Application July 19, 1941, Serial No. 403,228

2 Claims. (229—7)

This invention relates to fibre containers for the packaging and delivery of liquids, such as milk, fruit juices or the like and has particular reference to an auxiliary can top or cover which surrounds a filling opening and which opening is sealed by a hinged plug closure.

In certain respects, the invention constitutes an improvement upon the container illustrated and described in the John M. Hothersall United States Patent #2,085,979, issued July 6, 1937, and is especially an improvement on a removable auxiliary cover which protects the can top bordering the dispensing opening and maintains it in a sterile condition.

The invention contemplates a leakproof container which comprises a tubular body substantially square and uniform in cross-section, having top and bottom end members secured to the body by interfolded marginal portions constituting end seam joints, the parts being permanently united by a suitable adhesive and the container being coated with paraffin or other suitable material to produce a leakproof container, the top end having an opening for filling and dispensing purposes and a protective cover or shield which is placed upon a portion of the end in the region of the opening during manufacture of the container while the parts are in sterile condition to keep the cover surface in such condition until the container is opened, whereupon removal of the shield uncovers a sanitary top end surface over which the container contents may be poured.

An object of the invention is the provision of a flat top liquid proof fibre container wherein a removable auxiliary cover or shield having an opening therein is placed upon a can top to border upon and preserve the sterile condition of the region surrounding the filling opening in the top from the time of its manufacture until the contents are used, the container after filling being sealed by a hinge plug closure which is insertable within the cover and top openings, the auxiliary shield being so arranged that it is uncovered for the first time when the container is opened by lifting the shield and the plug closure to make effective a pouring opening and to expose the sterile surface over which surface the contents may be poured as discharged from the pouring opening.

Another object of the invention is the provision in a container having a closure of the character described, of a removable auxiliary cover which is substantially triangular in outline and which extends diagonally across the container being interposed between the container top and the hingable closure to cover the surface region surrounding the filling and dispensing opening, the shield being secured along the marginal edge of the container by a U-shaped metal band, the cover having a finger tab disposed at the container corner which is adapted to lift the protective cover together with the plug closure upon opening the container, such removed protective cover also removing dirt or other undesirable matter from the can top and preventing it from coming in contact with the pouring surface surrounding the opening.

Numerous other objects and advantages of the invention will be apparent as it is better understood from the following description, which, taken in connection with the accompanying drawings, discloses a preferred embodiment thereof.

Referring to the drawings:

Figure 1 is a fragmentary perspective view of a filled and sealed container embodying the present invention;

Fig. 2 is an enlarged fragmentary view in section of a filled container illustrated in Fig. 1, as viewed along the line 2—2 in that figure and showing the protective cover or shield secured to the upper part of the container and bordering upon the region of the filling opening, just prior to the container being closed and sealed;

Fig. 3 is a view similar to Fig. 2 showing a sealed container in the act of being opened;

Fig. 4 is a plan view of the protective cover or shield;

Fig. 5 is a view similar to Fig. 1 showing an alternative form of protective cover;

Fig. 6 is a view similar to Fig. 2 of the container shown in Fig. 5 as viewed along the line 6—6 in that figure; and

Fig. 7 is a view similar to Fig. 3 but of the container cover and plug closure of Fig. 5 and showing the opened container.

As a preferred embodiment of the invention there is illustrated in the accompanying drawings, a removable auxiliary cover or shield for protecting the surface region of the top of the container which surrounds the pouring opening in a container of the type described in detail in the Hothersall patent hereinbefore mentioned. The container briefly comprises a substantially rectangular body 11 closed at its ends with suitable top and bottom end members. These end members are similar and for the purpose of this invention only the top end member need be illustrated. The numeral 12 designates such a top end member.

The container body 11 preferably is formed from a single sheet of fibrous material which is folded at right angles to provide four side walls, these side walls being designated by the numeral 13 (Fig. 1). The edges of the sheet are joined by a lapped seam 14 which extends longitudinally of the body on one of the side walls 13. Such a seam extends up and over the top bent portions of the container, as illustrated in Figs. 1 and 5 of the drawings and has an extended portion over the top end 12. This lapped side seam joint is secured together by a suitable adhesive to make the joint leakproof.

The end members preferably are square and are formed from the same fibrous material as the body of such a container. Figs. 2, 3, 6 and 7 show how the paneled top end 12 provides a substantially flush top and how it is interlocked with the adjacent end or marginal portions of the body. For this purpose the marginal edges at the upper end of the body are bent inwardly as at 15 and then outwardly as at 16 to produce a horizontal seat or ledge 17 which extends circumferentially of the body and upon which the top end 12 is supported. The extreme edges of the marginal body portions beyond the ledge 17 are bent upwardly and inwardly over the outer marginal edges of the top end, thus providing opposite end flanges 18 which encircle and hold the top end in position.

The bent or folded parts 16 and 18 of the body and the intervening marginal edges of the top end 12, prior to being assembled, have their engaging surfaces coated with a suitable liquid proof adhesive 19. During assembling the parts are pressed firmly together and secured permanently to form a leakproof end seam 22.

The top end 12 is provided with a dispensing opening 23 (Figs. 2, 3, 6 and 7), which is formed adjacent one corner of the container. This opening preferably is closed by a hinge plug closure element 24 having a slightly tapered plug or cup shaped section 25. The hinge closure is secured to the top end 12 by a wire staple 26 which is arranged to hinge the plug closure so that it swings up and back to facilitate both operations of filling and pouring or dispensing of the container contents.

A removable protective cover or shield 27, which is substantially triangular in outline, is formed from fibrous material similar to other parts of the container but of lighter gauge stock. A circular opening 28 (Fig. 4) is cut in the protective cover 27 and is arranged to align with the filling opening 23 in the top end 12 when the cover is positioned upon the container (Figs. 1 and 2). In this position the protective cover is secured along an edge 29 diagonally across the container by a suitable liquid proof adhesive to hermetically seal it to the top end 12.

Angular edges 32, 33 (Fig. 4) have parallel spaced-apart fold lines 34, 35 so that the protective cover may be folded over the top end seam 22 of the container along the two adjacent side edges. A finger tab 36 is formed intermediate and at the junction of the two side edges 32, 33 so that it will be disposed at the corner of the container adjacent the dispensing opening. It serves the purpose of later removing the protective cover as will be hereinafter more fully described.

The angular edges 32 and 33 are temporarily but securely sealed over the end seam 22 by a light gauge metal band 37. Such a band is shown bent as at right angles and of U-shape cross-section. The securing of the protective cover 27 to the container top 12 and the assembling of the band 37 after the angular edges are folded upon the end seam preferably is performed on the completed container. This is done while the container is in a sterile condition in the course of its manufacture to preserve the sterility of the region surrounding the pouring opening during subsequent operations and handling of the container until its final opening by a ultimate consumer.

The hinge plug closure 24 is inserted in the opening 23 of the top end 12 and in the opening 28 in the protective cover 27 to temporarily seal the completed container. This usually is done at the container manufacturer's plant after which the containers are shipped by sanitary means to dairies for filling. In filling such a container, the plug closure 24 need only to be swung back to uncover the filling openings 23 and 28, the container being filled in the conventional manner. The filled container then is closed and sealed by the plug closure being reinserted into the filling opening.

In addition, the plug section 25 has its angular depending wall altered and shaped by a suitable expanding tool to form a circumferential bead 38. This bead is pressed outwardly beneath the inner annular edge of the top end 12 to more effectively seal the hinge closure in its closed position. The paraffin coating or other suitably treated surface of the closure 25 helps seal the openings 23 and 28 to produce a liquid-tight closure.

The sealed container, as illustrated in Fig. 1, may be opened by removal of the band 37 from the adjoining edges of the container. The finger tab 36 may be lifted to raise the protective cover 27 from its place and this action also lifts the plug closure 24 to expose the pouring opening in the container. This is illustrated in Fig. 3 of the drawings. It is apparent that any undesirable liquid or foreign matter clinging to the outer surface of the protective cover will be deflected or kept away from the pouring surfaces on the container top. The lifting of the protective cover 27 thus exposes these sterile surfaces of the top surrounding the pouring opening and the contents of the container may be poured through the opening and over such parts without contamination of the contents.

As an alternative form of the invention Figs. 5, 6 and 7 disclose a protective removable cover or shield 42 which is smaller than the cover 27 (Fig. 1) of the preferred form. Cover 42 is arranged to protect only the surface region surrounding the filling and pouring opening and to maintain it in a sterile condition. This cover is secured to the top end 12 when the hinge cover 24 is assembled by means of the staple 26 in the same manner as heretofore described.

A suitable adhesive may be used to border upon the marginal edges of the cover 42 to secure it to the top end 12 or a wax coating may be substituted. Where the container has been paraffin coated inside and outside the application of heat and pressure upon such a cover and top end will bond the parts together. A metal band 43 of U-shaped cross section, similar to but shorter than the sealing band 37 (Fig. 1), may be positioned upon two adjoining edges of the cover 42 and the end seam 22 of the container to constitute the seal.

The plug 24 of such a container is lifted from an opening 44 in the protective cover 42 and from the opening 23 in the top end 12 upon arrival at a dairy for filling purposes, as hereinbefore de-

scribed. The closing operation of the filled container which follows and the expanding of the plug is carried on in the same or in a similar manner to that already described for the preferred embodiment of the invention.

To open the container as illustrated in Fig. 5, the metal band **43** first is removed from the front pouring edge of the container after which the protective cover **42** is lifted, as illustrated in Fig. 7, together with the plug closure **24** to expose the dispensing opening in the container. This also exposes the sanitary protected surface surrounding the pouring opening, over which the container contents may be poured.

It is thought that the invention and many of its attendant advantages will be understood from the foregoing description, and it will be apparent that various changes may be made in the form, construction and arrangement of the parts without departing from the spirit and scope of the invention or sacrificing all of its material advantages, the form hereinbefore described being merely a preferred embodiment thereof.

We claim:

1. A container for liquids, comprising in combination, a tubular fibre body having a substantially flat fibre top end member secured thereto in a laterally projecting liquid proof end seam joint, said top end member having a filling and dispensing opening, a removable protective cover shield secured to said top end member surrounding said opening to maintain the portion of said top end member covered thereby in a sterile condition, adjacent marginal edges of said shield extending over and inwardly beneath and removably secured to said projecting end seam joint, said cover shield also having a filling and dispensing opening disposed in registry with said top end member opening, and a plug closure element hingedly secured to said top end member engaging over said protective cover shield to close and seal the registering openings in said cover and end member, said protective cover shield being removable during opening of the container to expose the normally concealed sterile surface of said top end member to permit pouring of the container contents over such sterile surface.

2. A container for liquids, comprising in combination, a rectangular fibre body having a substantially flat top end member secured thereto in an overhanging liquid proof end seam joint, said top end member having a filling and dispensing opening adjacent one corner, a triangular removable protective cover shield disposed over a portion of said top end member adjacent said opening, said cover shield being secured to said end member with adjacent marginal edges thereof extending over and inwardly beneath and removably secured to said overhanging end seam joint to maintain the concealed portion of said top end in a sterile condition, said cover shield also having a filling and dispensing opening aligned and disposed in registry with said top end member opening and a projecting finger tab at the outer corner thereof, and a plug closure element hingedly secured to said top end member engaging over said protective cover shield to close and seal the aligned openings in said cover and end member, said protective cover shield being removable by pulling outwardly said finger tab to open the container and expose the normally concealed sterile surface of said top end member to permit pouring of the container contents over such sterile surface.

3. A container for liquids, comprising in combination, a tubular fibre body having a substantially flat fibre top end member secured thereto in a laterally projecting liquid proof end seam joint, said top end member having a filling and dispensing opening adjacent one corner, a fibrous removable protective cover shield secured to said top end member surrounding said opening, adjacent marginal edges of said shield extending over and inwardly beneath and removably secured to said laterally projecting end seam joint, said protective cover shield also having a filling and dispensing opening aligned and disposed in registry with said top end member opening, said cover shield further including a metal band of substantially U-shape in cross-section clamped over said cover shield marginal edges and said projecting end seam joint for maintaining the covered surface of said top end member in a sterile condition, and a plug closure element hingedly secured to said top end member engaging over said protective cover shield to close and seal the aligned openings in said cover and end member, said metal band being removable to free the edges of said protective cover shield to permit the latter to be removed by pulling outwardly thereon to open the container while hinging outwardly said plug closure element, whereby to expose the normally concealed sterile surface of said top end member to permit pouring of the container contents over such sterile surface.

HERBERT F. COX, JR.
JOHN FELBER.