July 30, 1940. A. P. LARSSON 2,209,653

ELECTRIC FAN HANGER

Filed Aug. 12, 1938

Fig. 1.

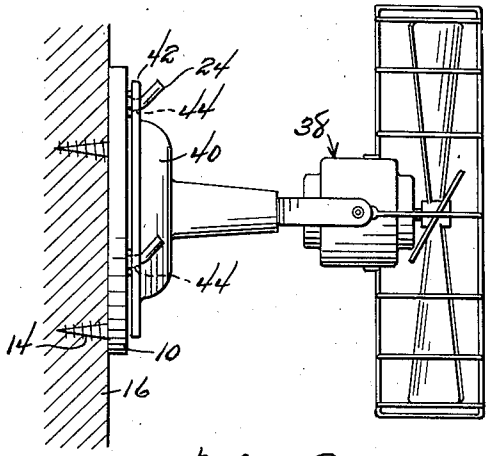

Fig. 2.

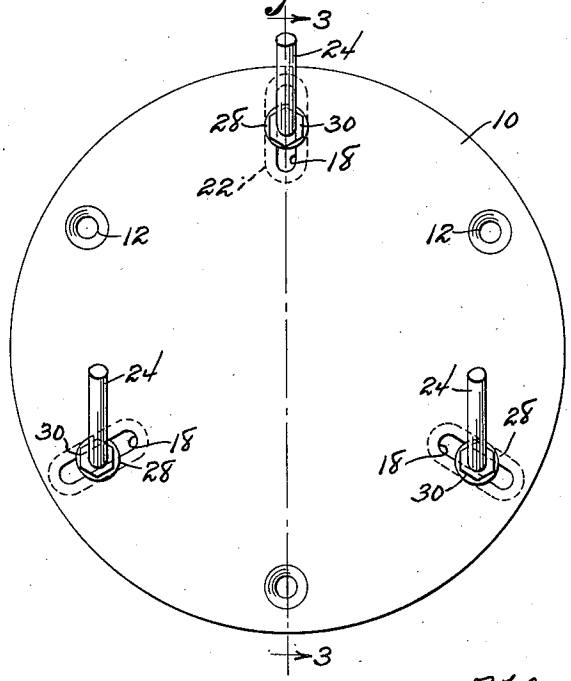

Fig. 3.

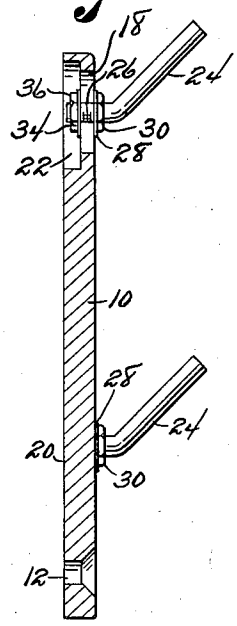

Alfred P. Larsson

INVENTOR

BY Victor J. Evans & Co.

ATTORNEYS

Patented July 30, 1940 2,209,653

UNITED STATES PATENT OFFICE

2,209,653

ELECTRIC FAN HANGER

Alfred P. Larsson, New York, N. Y.

Application August 12, 1938, Serial No. 224,573

2 Claims. (Cl. 248—223)

My invention relates to electric fans and has among its objects and advantages the provision of an improved fan mount.

In the accompanying drawing:

Figure 1 is an elevational view of my invention showing a fan anchored thereto;

Figure 2 is a face view of the fan mount; and

Figure 3 is a sectional view along the line 3—3 of Figure 2.

In the embodiment selected to illustrate my invention, I make use of a plate 10 provided with openings 12 for the reception of screws 14 which may be anchored in the wall structure 16. Plate 12 is provided with three slots 18 located 120° apart. In the rear face 20 of the plate 10 I provide recesses 22 aligned with the slots 18. Anchoring pins 24 have threaded shanks 26 extending through the slots 18. Shanks 26 are freely adjustable longitudinally of their respective slot. Each shank 26 is provided with a washer 28 and a nut 30 lying adjacent the face 32 of the plate. Each shank is also provided with a washer 34 and a nut 36 lying adjacent the face 20. Pins 24 are shaped to define acute angles with respect to the face 32 and all the pins are positioned vertically when viewed according to Figure 2.

In Figure 1 I illustrate an electric fan 38 as being connected with my mount. The fan is of conventional design and includes the usual face 40 having a flange 42. Such flanges are of conventional construction and include openings 44 for the reception of screws for fixedly relating the base of the fan to a supporting structure. Pins 24 are of such diameter as to slip easily through the openings 44. The angularity of the pins 24 with respect to the face 32 is such as to effectively carry the load of the fan.

Pins 24 may be shifted longitudinally of the slots 18 to secure precise location of the pins with respect to the openings 44 in the flange of the fan. Recesses 22 house the nuts 36 to bring them within the contour of the face 20 so as not to mar the wall or supporting structure 16. My mount is easily attached to a wall or other support through the medium of the screws 14. The mounts may be located throughout the building and are so designed as to facilitate shifting of the fan from place to place. Because of the angularity of the pins 24 the fan 30 will be effectively supported against the face of the plate 10. The fan is easily removed from the mount by merely lifting the fan in the clear of the pins 24.

In most conventional fans the openings 44 are spaced so as to be in receiving relation with the pins 24. In the event that the original openings in the base are not properly aligned, special openings may be provided for connection with the pins.

I claim:

1. In combination with a fan base having openings, a fan mount comprising a plate adapted to be anchored to a support, said plate being provided with slots angularly arranged with respect to each other, pins extending through said slots and having upwardly inclined extensions projecting through the openings in the fan base for detachably supporting the fan base, said pins being slidable longitudinally of said slots for spacing the pins to bring their extensions into alignment with the openings in the fan base, and means cooperable with said pins and the opposite faces of said plate for clamping the pins on the plate.

2. In combination with a fan base having openings, a fan mount comprising a plate adapted to be anchored to a support, said plate being provided with slots angularly arranged with respect to each other, pins extending through said slots and having upwardly inclined extensions projecting through the openings in the fan base for detachably supporting the fan base, said pins being slidable longitudinally of said slots for spacing the pins to bring their extensions into alignment with the openings in the fan base, means cooperable with said pins and the opposite faces of said plate for clamping the pins on the plate, said plate being recessed about said slots on its face adjacent said support, said means comprising flange-like elements mounted on the pins for engagement with the face of the plate adjacent the fan base, and nuts having threaded relation with said pins lying against the recessed areas of the plate for housing the nuts and the associated ends of the pins inside the recesses.

ALFRED P. LARSSON.