Oct. 9, 1934. J. E. MARSHALL 1,975,854

LENS GRINDING MACHINE

Filed Nov. 13, 1931 3 Sheets-Sheet 1

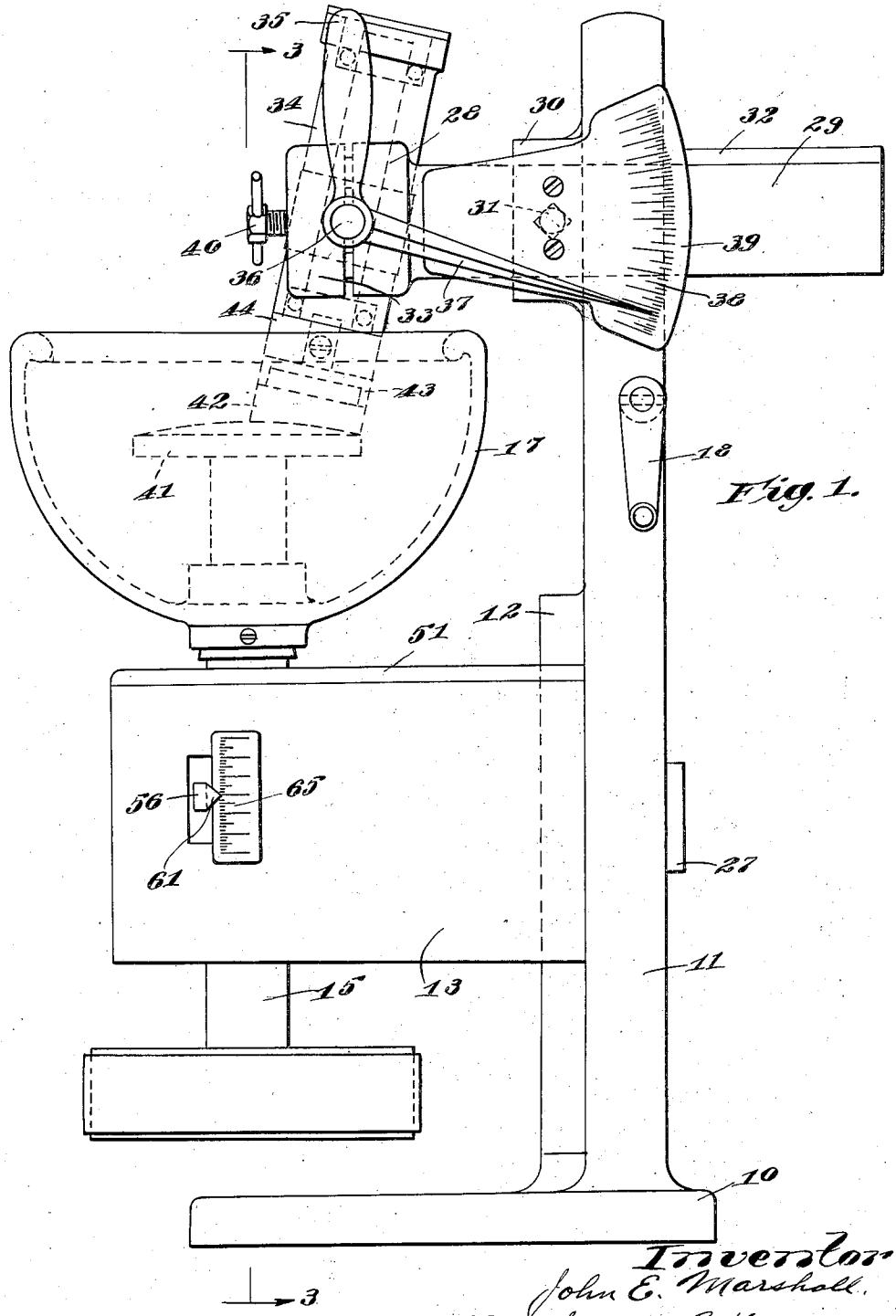

Fig. 1.

Inventor
John E. Marshall.
By James C. Hamilton
Attorney

Oct. 9, 1934. J. E. MARSHALL 1,975,854

LENS GRINDING MACHINE

Filed Nov. 13, 1931 3 Sheets-Sheet 2

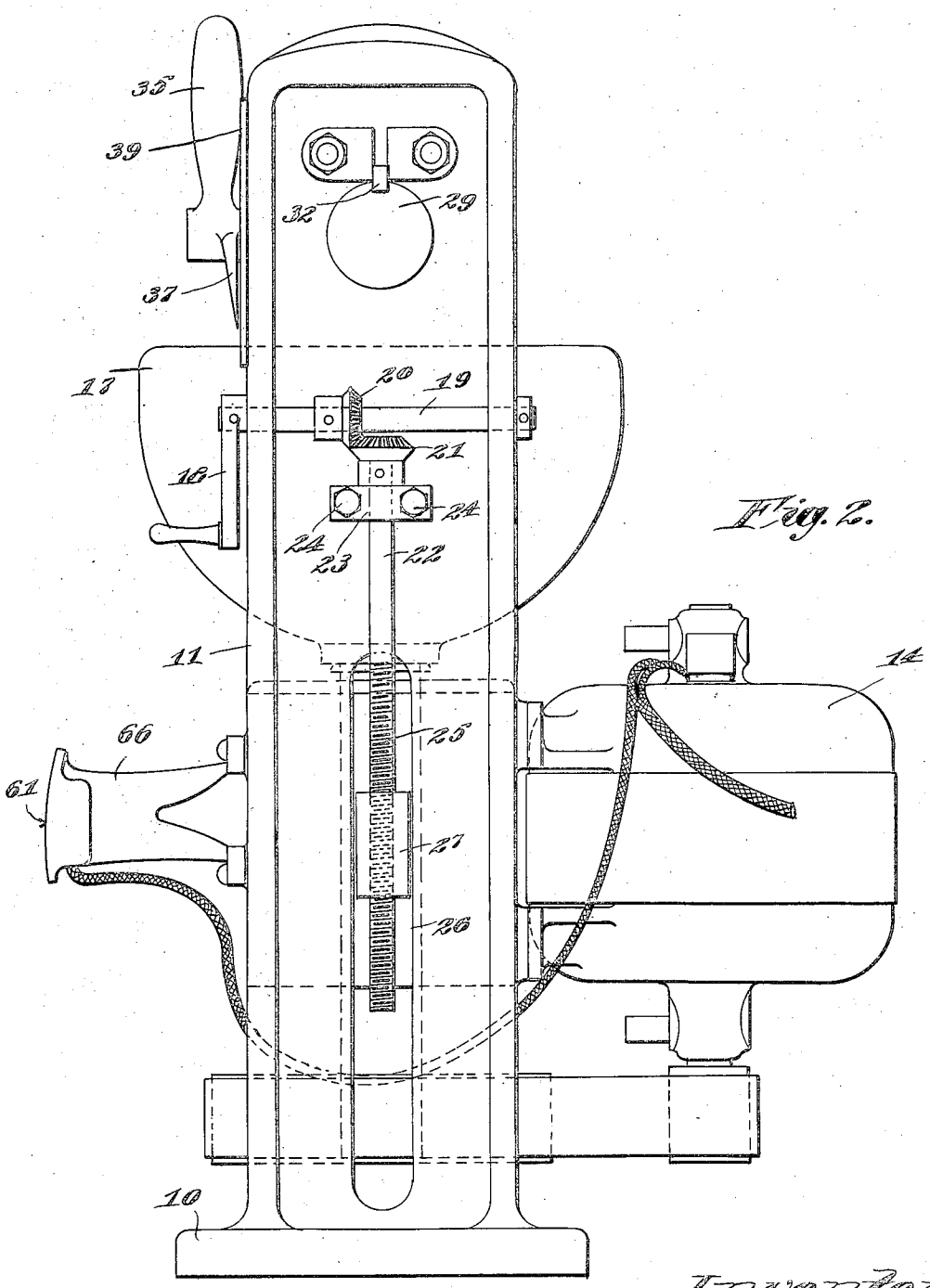

Fig. 2.

Inventor
John E. Marshall
By James C. Hamilton
Attorney

Oct. 9, 1934. J. E. MARSHALL 1,975,854

LENS GRINDING MACHINE

Filed Nov. 13, 1931 3 Sheets-Sheet 3

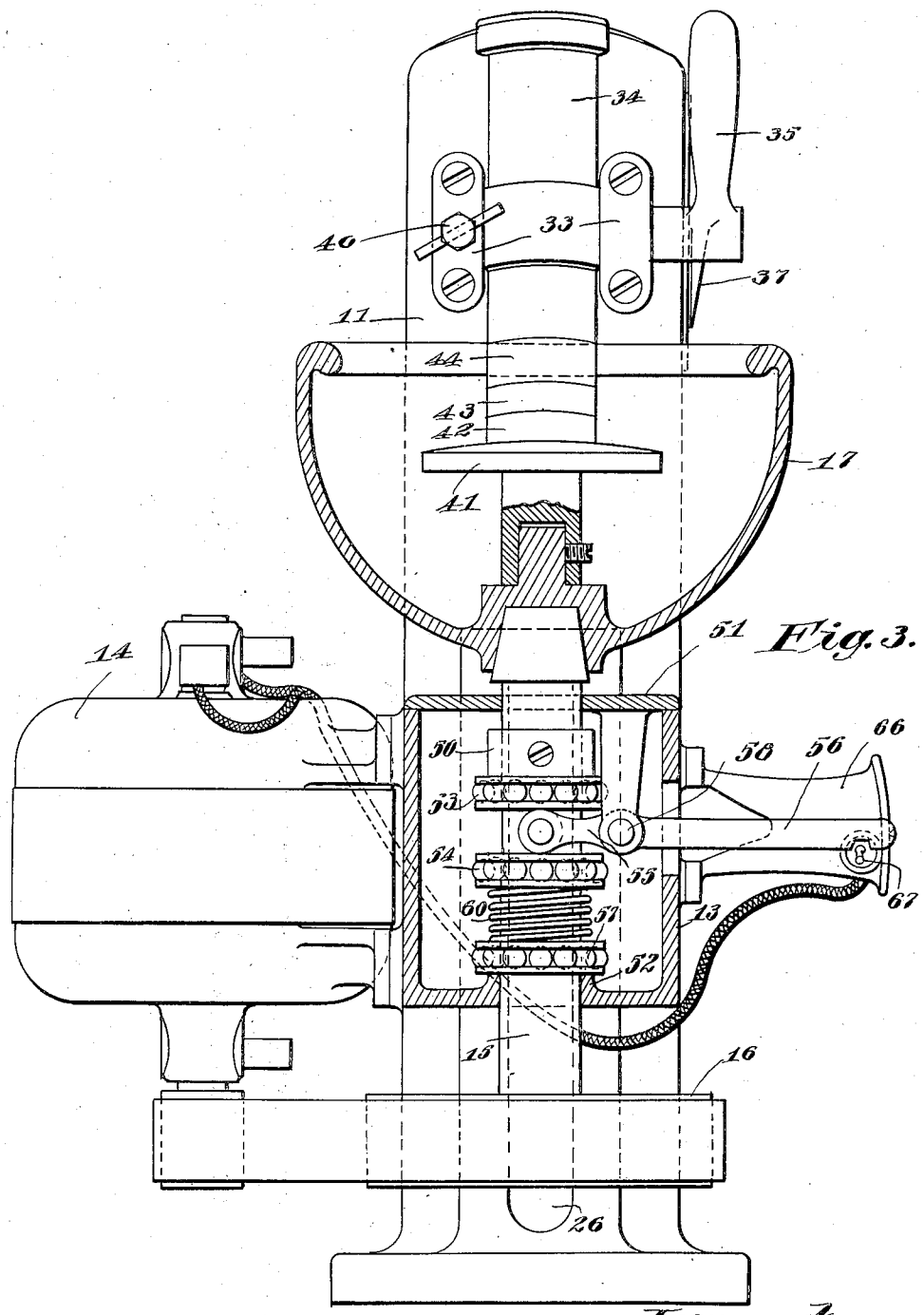

Fig. 3.

Inventor
John E. Marshall
By James C. Hamilton
Attorney

Patented Oct. 9, 1934 1,975,854

UNITED STATES PATENT OFFICE

1,975,854

LENS GRINDING MACHINE

John Edward Marshall, Medford, Mass.

Application November 13, 1931, Serial No. 574,775

3 Claims. (Cl. 51—129)

My present invention relates to lens grinding machines and more particularly to an automatic lens grinding machine.

The principal object of my invention is an improved lens grinding machine;

Another object is an improved automatic lens grinding machine which may be set such that the machine will automatically stop when the desired amount of grinding has been accomplished;

Other objects and novel features comprising the construction and operation of my invention will appear as the description of the same progresses.

Referring to the drawings illustrating the preferred embodiment of my invention;

Fig. 1 shows a side elevation of the complete machine;

Fig. 2 is a rear elevation, and

Fig. 3 is a partial cross-section and front elevation indicated at 3—3 of Fig. 1.

Referring more in detail to the drawings, 10 indicates the base of the machine upon which is vertically located a supporting member 11. Attached to the vertical supporting member 11 on its inner side is a slide way 12 which is adapted to receive and vertically guide a casing 13. The casing 13 carries all the driving mechanism the exterior parts of which are; an electrical driven motor 14 attached to one side of the casing 13; a drive shaft 15 vertically mounted within the front portion of the casing 13 having a pulley 16 attached at its lowermost end and indicated at Fig. 3; an upper rotatable member 17 attached to the upper end of the shaft 15 in which abrasive grinding compound is carried. The entire structure including the motor 14, pulley 16, casing 13, and the container 17 is vertically adjustable on the guide 12 by means of a crank member 18 which is journalled in the supporting member 11 through which the crank shaft 19 passes. Pinned to the shaft 19 is a bevel gear 20 adapted to mesh with another bevel gear 21 secured to a vertical shaft 22 journalled within a bearing 23 attached to the supporting member 11 by means of bolts 24. The lower portion of the shaft 22 is threaded at 25 through a portion of the casing 11 which extends rearwardly through the opening 26 in the supporting member 11 as indicated at 27. By rotating the crank 18 the casing 11 together with the motor 14 and all connecting internal parts may be elevated or dropped to any desired amount within the range of the mechanism.

At the top of the upright supporting member 11 is located the lens holding and adjusting mechanism which comprises a horizontally adjustable bracket member provided at the front portion with a yoke 28 and a horizontal slidable rod portion 29. The rod portion 29 is adapted to be received in an opening provided therefor in the upper portion of the member 11 the front portion of which comprises a boss 30 which is provided on one side with a set screw 31 for the purpose of locking the horizontal movement of the rod member 29. The rod 29 is further provided with a key member 32 provided for the purpose of preventing the rod member 29 from rotating. Clamped to the front side of the yoke member 28 are bearing cap members 33. Journalled within the bearing cap members 33 and between the caps 33 and front face of the yoke 28 are trunnions comprising a portion of the lens bearing casing 34. The casing 34 is adapted to pivot on its trunnions in the bearings just described for the purpose of adjusting the angle at which it may be desired to grind a lens. A handle 35 is attached to one of the trunnions 36 for the purpose of easily adjusting the casing 34 and is further provided with an indicator pointer 37 which is calibrated with a scale 38 inscribed on a plate 39 which is attached to the member 11. A locking screw 40 is provided on the opposite side in the cap member 33 such that its inner end bears directly on the adjacent trunnion for the purpose of securely locking the lens bearing casing 34 at any desired angle.

Within the cup member 17 is located a tool member 41 which is fixed to the cup member 17 and shaft 15 such that it rotates with these members. This tool member 41 shown in the drawings illustrates a tool for grinding concaved surfaces in lenses and where it is desired that a convexed surface be ground, a tool having a concaved surface is used. The lens 42 is usually fixed to a lens holder 43 by sealing wax, the lens holder being recessed to hold a quantity of the wax. The holder 43 is held in a rotatable bearing member 44 which is journalled on ball bearings within the casing 34 such that when the tool 41 is rotating and grinding the lens 42 is freely held and self centering.

One of the important improvements in my present invention comprises the automatic vertical adjustment inclosed within the casing 11. In Fig. 3 it will be noted that the shaft 15 is provided with a fixed collar 50 directly below the bottom side of the casing cover plate 51 which also forms one end bearing for the shaft 15, the opposite end being journalled in the bottom of the casing 11 at 52. A pair of ball thrust

bearings 53 and 54 are separated by a yoke member 55 comprising a portion of the lever 56 which is pivoted to a hanger portion of the cover 51 at 58. A third ball thrust bearing 57 is located above the boss 52 and is separated from the bearing 54 by a compression spring 60. The lever 56 is provided with a pointer 61 at its free end and is adapted to register with a graduated scale 65 located on an extension bracket 66 attached to one side to the casing 13 such that the movement of the shaft 15 up or down causes the pointer 61 to register on the scale 65. Inserted in the side of the bracket 66 is a toggle switch 67 adapted to control the motor 14 and operated by means of the lower side of the lever 56.

In operation, a lens is inserted in the holder 43 and the casing 34 is adjusted horizontally to the desired point the angle of casing 34 is then adjusted by means of the scale 39 and pointer 37. The casing 13 is now elevated by means of the crank 18 until the pointer 61 registers at the desired point on the scale 65. The motor switch 67 is now opened and the tool 41 caused to rotate against the lens 42. The tool 41 is now under a tension exerted thereon from the spring 60 and as the material comprising the lens is ground away the lever 56 gradually approaches the switch 67 until the switch is closed and the motor stopped and the grinding operation completed.

Having thus described my invention what I claim as new, is:

1. A lens grinding machine comprising a base, a vertical supporting member, a lens holding member attached to said supporting member, a casing vertically adjustable on said supporting member, a vertical drive shaft located within said casing, an electrical motor attached to said casing and adapted to drive said shaft, a grinding tool attached to said shaft adapted to be rotated by said shaft, a compression spring located adjacent the inner lower side of said casing and surrounding said shaft and adapted to force said tool against said lens, a transverse lever located in the side of said casing and pivoted at its central portion to the inner top of said casing, a yoke comprising the inner end of said lever adapted to be moved up or down in a vertical direction with said shaft by means of said compression spring, a switch adapted to be operated by said lever for the purpose of stopping said motor.

2. A lens grinding machine comprising a base, a vertical supporting member, a lens holding bearing member attached to said supporting member, means for adjusting said lens holding bearing member in a horizontal plane and means for adjusting said lens holding member on a pivot at various angles in a vertical plane, a casing vertically adjustable on said supporting member, a vertical drive shaft journalled within said casing, an electrical motor attached to one side of said casing and adapted to drive said shaft, resilient means for holding said shaft in vertical contact with said lens, a lever pivoted within said casing and adapted to be pivoted up or down with said shaft, means associated with said lever adapted to stop said motor at a predetermined point, a grinding tool located on the end of said shaft adapted to grind said lens, substantially as shown and described.

3. A lens grinding machine comprising a base having an upright member located at one side thereon, a rod member horizontally disposed through the top of said upright member and provided with a yoke construction at one end thereof, a lens holding member pivotally attached through said yoke construction and extending downwardly therefrom, a grinding tool housing mounted in the lower portion of said upright member in a vertically adjustable manner, a rotatable grinding tool vertically disposed in said grinding tool housing adapted to be maintained under tension upwardly against a lens located on said lens holder.

JOHN EDWARD MARSHALL.