PCT

WORLD INTELLECTUAL PROPERTY ORGANIZATION
International Bureau

INTERNATIONAL APPLICATION PUBLISHED UNDER THE PATENT COOPERATION TREATY (PCT)

(51) International Patent Classification 6 : B41F 35/00

A1

(11) International Publication Number: WO 95/01876

(43) International Publication Date: 19 January 1995 (19.01.95)

(21) International Application Number: PCT/DK94/00276

(22) International Filing Date: 6 July 1994 (06.07.94)

(30) Priority Data:
0831/93 9 July 1993 (09.07.93) DK

(71) Applicant *(for all designated States except US)*: MASKINFABRIKEN TRESU A/S [DK/DK]; Eegsvej 14-16, DK-6091 Bjert (DK).

(72) Inventor; and
(75) Inventor/Applicant *(for US only)*: GYDESEN, Erik [DK/DK]; Skjoldborgvej 17, DK-7100 Vejle (DK).

(74) Agent: LEHMANN & REE A/S; Grundtvigsvej 37, DK-1864 Frederiksberg C (DK).

(81) Designated States: AM, AT, AU, BB, BG, BR, BY, CA, CH, CN, CZ, DE, DK, ES, FI, GB, GE, HU, JP, KE, KG, KP, KR, KZ, LK, LT, LU, LV, MD, MG, MN, MW, NL, NO, NZ, PL, PT, RO, RU, SD, SE, SI, SK, TJ, TT, UA, US, UZ, VN, European patent (AT, BE, CH, DE, DK, ES, FR, GB, GR, IE, IT, LU, MC, NL, PT, SE), OAPI patent (BF, BJ, CF, CG, CI, CM, GA, GN, ML, MR, NE, SN, TD, TG), ARIPO patent (KE, MW, SD).

Published
With international search report.
In English translation (filed in Danish).

(54) Title: METHOD AND APPARATUS FOR CLEANING A ROLLER SURFACE

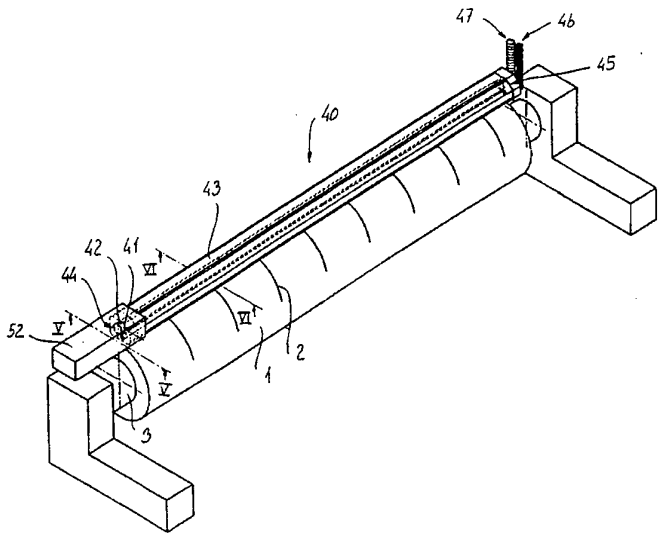

(57) Abstract

A method and apparatuses for cleaning a cylinder surface. The method is particularly suitable for use on flexographic printing cylinders where the automated cleaning facilitates the cleaning of plate cylinders. However, the method may be applied to any type of cylinder. The advantage is that in many cases it will not be necessary to halt the printing process for cleaning the cylinder. The method comprises detachment of particles such as dust, fibers and other foreign objects deposited on the cylinder surface. After the particles have become detached by means of pressurized air, liquid, ultrasound or other suitable media, the cylinder surface is exposed to a vacuum whereby the detached particles and other material deriving from the cleaning medium are sucked off the surface.

FOR THE PURPOSES OF INFORMATION ONLY

Codes used to identify States party to the PCT on the front pages of pamphlets publishing international applications under the PCT.

AT	Austria	**GB**	United Kingdom	**MR**	Mauritania
AU	Australia	**GE**	Georgia	**MW**	Malawi
BB	Barbados	**GN**	Guinea	**NE**	Niger
BE	Belgium	**GR**	Greece	**NL**	Netherlands
BF	Burkina Faso	**HU**	Hungary	**NO**	Norway
BG	Bulgaria	**IE**	Ireland	**NZ**	New Zealand
BJ	Benin	**IT**	Italy	**PL**	Poland
BR	Brazil	**JP**	Japan	**PT**	Portugal
BY	Belarus	**KE**	Kenya	**RO**	Romania
CA	Canada	**KG**	Kyrgystan	**RU**	Russian Federation
CF	Central African Republic	**KP**	Democratic People's Republic of Korea	**SD**	Sudan
CG	Congo			**SE**	Sweden
CH	Switzerland	**KR**	Republic of Korea	**SI**	Slovenia
CI	Côte d'Ivoire	**KZ**	Kazakhstan	**SK**	Slovakia
CM	Cameroon	**LI**	Liechtenstein	**SN**	Senegal
CN	China	**LK**	Sri Lanka	**TD**	Chad
CS	Czechoslovakia	**LU**	Luxembourg	**TG**	Togo
CZ	Czech Republic	**LV**	Latvia	**TJ**	Tajikistan
DE	Germany	**MC**	Monaco	**TT**	Trinidad and Tobago
DK	Denmark	**MD**	Republic of Moldova	**UA**	Ukraine
ES	Spain	**MG**	Madagascar	**US**	United States of America
FI	Finland	**ML**	Mali	**UZ**	Uzbekistan
FR	France	**MN**	Mongolia	**VN**	Viet Nam
GA	Gabon				

METHOD AND APPARATUS FOR CLEANING A ROLLER SURFACE

BACKGROUND OF THE INVENTION

The present invention relates to a method for automatic cleaning of a cylinder, especially a cylinder of a printing machine, in which the cylinder is provided with plates and used for printing on a print carrier made of e.g. paper, plastic film, or metal film, and in which the cylinders become smudged, during printing, with printing ink, particles detached from said print carrier such as dust or fibres, and other foreign objects, wherein an area of the cylinder surface is cleaned by exposing said area to a pressurized flow of fluid so that the foreign objects inside the area on the cylinder surface are detached, and wherein said area is exposed to a vacuum to remove said detached foreign objects and any other material originating from said flow of fluid.

So-called flexographic printing on a print carrier of paper, plastic film or metal film uses a system consisting of a first cylinder, around which a web of the print carrier runs, a second cylinder performing the actual printing and being provided with plates for this purpose, and a third cylinder transmitting ink to the second cylinder.

When the printing process has continued for a certain time, there will normally arise problems with the printing quality. This is because the second cylinder, the printing cylinder, has become smudged with dust, fibres or other particles from the web of paper, plastic film or metal film. When this occurs, it is necessary to halt the printing process, displace the cylinder from its bearing and then manually brush or wash impurities off the second cylinder. This is a serious inconvenience since it means that the stoppage periods may amount to as much as 30 per cent of the total time in which the machine is in use. This means that the operation time in which printing takes place may risk being reduced to 70 per cent of the time in which the machine is in use. Out of those 30 per cent of time in which the machine is halted, up to 90 per cent is due to cleaning the printing cylinder. Furthermore, the waste of paper, plastic film or metal film is substantial because there is a certain running-in period after a stoppage and the web of paper or film being printed during this period does not have a sufficient quality and must be discarded.

Thus, it is the object of the present invention to provide a method which may be carried out automatically, not manually, and in which the above-mentioned inconveniences such as stoppage time and material waste are avoided.

This object is achieved by a method characterized in that the cylinder surface is constituted by adjacent areas lengthwise and crosswise on the cylinder surface provided by such area extending over a minor part of the circumference of said cylinder and a minor part of the length of said cylinder, and that said adjacent areas of said cylinder surface are cleaned successively.

In addition, apparatuses for use by the method will be disclosed.

By the method according to the present invention it is now possible, during operation, to clean a cylinder, particularly a flexographic printing cylinder. In this manner one avoids the substantial time waste previously associated with cleaning the cylinder. Reducing the time waste, one also reduces the waste of material accordingly as cleaning is accomplished during ordinary operational conditions. If cylinder cleaning is carried out before it is so smudged as to deteriorate the printing quality, there will be neither material nor time waste during cleaning.

The method is advantageous in that cleaning is performed automatically and preferably while the printing process is running. It is possible to use different numbers of cleaning media in the method according to the invention. Pressurized air is preferably used for detaching the particles from the printing cylinder. For various reasons, however, it may be advantageous to use other media, e.g. depending on the ink used for printing, the material being printed on, the kind of particles to detach from the cylinder, or the speed at which the printing process is operating. Among other options for cleaning media besides pressurized air one may mention liquids, either in the shape of a jet or influenced by an ultrasound field, and likewise various kinds of solid matter particles may be added to the fluid media constituting a fluidized medium.

Having become detached from the cylinder surface, the particles will normally have

to be removed from the surface. This is accomplished in that, after the particles have been detached from the surface, the cylinder is exposed to a vacuum sucking the particles off the surface. Any other material originating from the cleaning process, e.g. solid matter particles which have been used in the cleaning process, may be sucked off at the same time. It will also be possible to load the particles that are to be detached, or have become detached, with static electricity and subsequently to use an electric voltage field to remove the particles from the cylinder surface.

In order to ensure that the cylinder with the plates is cleaned both on and between the plates, the cleaning medium should preferably be directed in an inclined angle in relation to the tangent of the cylinder surface. This will ensure that particles depositing on the sides of the plates are removed as well. Thus, the inclined flow will attack both the cylinder surface and the cylinder sides in an inclined angle, not parallel or perpendicular. The method is further advantageous in that no damage is done to the plates during the cleaning process.

As mentioned, the method is suitable for cleaning printing cylinders in flexography which printing process uses cylinders with printing plates. However, the method may be used for many types of rollers and cylinders, not just printing cylinders.

Apparatuses for use by the method according to the present invention may be designed in many different ways. Two types of apparatuses are disclosed according to the present invention. One apparatus comprises mobile cleaning members in the shape of a cleaning head being slid over the cylinder surface whereby successive cleaning of the surface takes place. The other apparatus comprises fixed cleaning members provided with an internal device likewise conducting a successive surface cleaning.

DESCRIPTION OF THE DRAWINGS

The invention will now be described in further detail with reference to the attached drawings, in which

fig. 1 shows a first embodiment of an apparatus according to the invention and

for use by the method according to the invention,

fig. 2 shows a cleaning head forming part of the first embodiment of an apparatus,

figs. 3A, 3B and 3C show different embodiments of masking plates for mounting in the cleaning head of the first embodiment,

fig. 4 shows a second embodiment of an apparatus according to the invention,

fig. 5 shows an operating mechanism for nozzle pipes and suction pipes in the second embodiment of the apparatus according to the invention,

fig. 6 shows a suction pipe constituting part of the second embodiment of an apparatus, and

fig. 7 shows a cross section of a pipe member in the second embodiment according to the invention.

Fig. 1 illustrates part of a machine for flexographic printing, which machine is provided with an apparatus according to the invention. The machine comprises a cylinder 1 with plates 2. The cylinder 1 rotates around a shaft 3. The apparatus comprises a boom 4 on which a cleaning head 5 is conveyed. Conveyance is effected by means of a band 6 driven by a motor 7 such as a pneumatic motor, a hydraulic motor or other type of motor. The motor 7 is located at one end 8 of the boom 4, and the band 6 is led over a pulley 9 in the other end 10 of said boom. The cleaning head 5 is fixed to the band 6 by means of a slide 11 which is movable relative to the boom 4. The cleaning head 5 is mounted on said slide, and the cleaning head is provided with three tubes 12, 13, 14 connected thereto. The thin tubes 11, 12 are used for conveying compressed air from an external pressure source, and liquid is fed to the cleaning head 5 through an antechamber 15 wherein mixing of compressed air and liquid takes place. The thick tube 14 is used, during exposure of the cylinder surface 16 to a vacuum from an external vacuum source, to remove loosened particles and other material from the cylinder surface.

In order to secure sufficient cleaning of the cylinder surface 16, the cleaning head 5 is provided with small nozzles through which the compressed air and the liquid, possibly containing fluidized particles of solid matter, are conveyed to the surface. The

direction of cylinder rotation r will preferably be oriented in such a manner that the surface areas to be cleaned are led towards the cleaning head front 17, which is opposite the side of the cleaning head 5 mounted on the slide 11. By this arrangement cleaning is effected by means of a combination of one or more of the elements air, liquid and solid matter particles, immediately succeeded by the application of a vacuum to the cylinder surface. The whole cylinder is cleaned as the cleaning head 5 is moved back and forth along the boom 4 while the cylinder 1 is rotating.

Fig. 2 illustrates a cross-section through a cleaning head 5. The cleaning head 5 comprises two chambers 20, 21, the first chamber 20 of which is connected to the antechamber 15 (see fig. 1), and the second chamber 21 is connected to the thick tube for vacuum application. The underside 22 of the cleaning head 5 constitutes a segment of a circle and when mounted it is immediately adjacent the cylinder surface. An orifice 23 of the first chamber is inclined in relation to the periphery of the cleaning head underside 22. This ensures improved cleaning of the cylinder surface 16. In preferred embodiments, the orifice 23 of the first chamber will be provided with screens which are provided with nozzles or slots, which may have different sizes and different directions (see figs. 3A-3C). For mounting of the screens, the cleaning head is provided with a recess 24 before the orifice 23 of the first chamber 20. The second chamber 21 is provided with an orifice 25 having an extension that ensures that all material from the cylinder surface 16 will be removed.

Figs. 3A, 3B and 3C illustrate different embodiments of screens 30A, 30B, 30C. Fig. 3A shows a screen 30A provided with several small holes 31 the longitudinal axis l_A of which is directed in a 90° angle α_A in relation to the plane p_A of the screen 30A. By this arrangement the cleaning jet is oriented in the same direction compared to the cylinder surface as the inclined direction of the orifice 23 of the first chamber 20. The screen 30A is further provided with bolt holes 32 so that the screen may be affixed to the cleaning head 5. Fig. 3B shows a second screen 30B provided with a slot 33 instead of holes. The slot is also inclined in a 90° angle α_B in relation to the plane p_B of the screen 30B. Fig. 3C shows an additional screen 30C, likewise provided with a slot 34. However, the slot 34 of this embodiment is directed in a 75° angle α_C in

relation to the plane p_C of the screen. By this arrangement the direction of the jet conveyed through the slot 34 will be deflected and have a direction towards the cylinder surface 16 differing from that of the orifice 23 of the first chamber 20. As will become apparent, it is possible by means of different types of screens to change the flow pattern and flow direction of the cleaning fluid conveyed onto the cylinder surface.

Fig. 4 illustrates part of a machine provided with a second embodiment of an apparatus according to the invention for use by the method according to the invention. Like the machine illustrated in fig. 1, said machine is a machine for flexographic printing. Thus, the machine comprises a cylinder 1 provided with plates 2, said cylinder being supported by a shaft 3. Positioned alongside the cylinder is a pipe member 40. The pipe member 40 comprises two pipes, a nozzle pipe 41 and a suction pipe 42, respectively, and a jacket 43. The pipes 41, 42 are supported in both ends, a first end 44 and a second end 45, respectively. The second end 45 of either pipe is open and connected with compressed air and liquid pipes 46, 47 and, respectively, a suction pipe 48 for the application of a vacuum from an external vacuum source to the suction pipe 42.

Fig. 5 shows that the first end 44 of either pipe 41, 42 is closed and that the pipes are interconnected by means of a gear comprising two gear wheels 49, 50 so that the pipes are rotatable around the longitudinal axes at a given mutual speed of rotation. A motor 51, such as a pneumatic motor, a hydraulic motor or other type of motor, is connected to the suction pipe 42. The motor drives the suction pipe 42, which drives the nozzle pipe 41 via the gear transmission with the latter. The motor 51 and the gear are sheltered by a box 52. The figure illustrates the first end 44 of the pipe member 40 seen from a side 56 facing the cylinder. On this side, the jacket 43 of the pipe member 40 is provided with nozzles 53 and a slot 54. The nozzles 53 are in connection with the outside surface of the nozzle pipe 41, whereas the slot 54 is in connection with the outside surface of the suction pipe 42.

Fig. 6 illustrates the nozzle pipe 41 or, alternatively, the suction pipe 42. A preferred

embodiment of either one of the nozzle pipe and the suction pipe is provided with a slot 55 spiraling along the length of either pipe. The slot 55 extends in such a manner that the spiral completes exactly one turn over the extension of the slot from one end of either pipe to the other. In an alternative embodiment, one or both of the pipes are just provided with a rectilinear slot. The function of the two pipes will be described below.

Fig. 7 is a cross-section illustrating the position of the nozzle pipe 41 and the suction pipe 42 relative to each other inside the pipe member 40. Besides the two pipes 41, 42 the pipe member comprises, as mentioned, a jacket 43 enclosing the two pipes which are thus positioned in two cavities in the jacket. As an alternative to the jacket, the nozzle and suction pipes may be enclosed in the hollow space formed by the inside of additional pipes having an inside diameter corresponding to the outside diameter of the nozzle pipe and the suction pipe, respectively. In that case, these additional pipes would be provided with nozzles 53 and a slot 54 corresponding to the ones provided in the jacket.

The nozzles 53 and the slot 54 in the jacket 43 extend from one side 56 of the pipe member 40, facing the cylinder 1, to the nozzle pipe 41 and the suction pipe 42, respectively. In use, the nozzle pipe 41 will be connected to a source of compressed air and possibly also a source of liquid which may contain fluidized particles of solid matter. As an alternative to the compressed air source, the nozzle pipe 41 may be connected to an ultrasound source which effects a cleaning of the cylinder surface 16 by means of the liquid.

The combination of compressed air, liquid and possibly ultrasound conveyed to the nozzle pipe 41 will, during rotation of the latter, be conveyed out though the nozzles 53 in the jacket 43 every time the slot in the nozzle pipe 41 (see fig. 6) is aligned with the nozzles of the jacket. This way of effecting a step-by-step application of cleaning medium to the cylinder surface reduces the risk of excessive pressure reduction occurring over the extension of the pipe. Since only a minor part of the total extension of the screw-shaped slot in the nozzle pipe 41 overlaps the nozzles 53 in the jacket 43,

a uniform pressure will build up in the entire pipe. The cleaning medium is conveyed out through this part of the screw-shaped slot and on through the nozzles 53, and due to the uniform pressure in the pipe, the cleaning effect of the cleaning medium will be equal throughout the extension of the jacket 43. Contrarily, if the cleaning medium were conveyed out through all nozzles 53 at the same time, a pressure reduction would soon arise along the nozzle pipe, the lowest pressure occurring opposite the end where the pressure is conveyed to the pipe. The nozzle pipe 41 of the present invention is thus subject to constant feeding of cleaning medium but the medium is only conveyed to a small area of the cylinder surface corresponding to the location along the extension of the nozzles 53 where the slot of the nozzle pipe overlaps the nozzles. During the rotation of the nozzle pipe, alternating parts of the slot will successively overlap the nozzles.

After the cleaning medium has loosened particles from the cylinder surface 16, these particles and any material deriving from the cleaning medium have to be removed from the cylinder. This is accomplished with the use of the suction pipe 42. Its function is structured in such a manner that cleaning is only effected on minor areas of the cylinder surface, said areas being exposed successively to a vacuum whereby the whole surface of the cylinder is cleaned. The suction pipe 42 is in a constant vacuum from an external vacuum source. The area of the cylinder surface being exposed to the vacuum will be the area positioned adjacent the location where part of the screw-shaped slot 55 in the suction pipe 42 overlaps the rectilinear slot in the jacket 43. This will only be a minor part of the total extension of the slot 54 in the jacket, and thus a strong suction capacity is obtained at this location. Contrarily, if the vacuum had been applied to the whole slot 54 in the jacket at the same time, the suction capacity would be very limited and the suction capacity in the end of the pipe opposite where the suction tube 47 is connected would be reduced. The suction pipe 42 of the present embodiment is thus able to suck off particles successively from adjacent areas of the cylinder surface due to the fact that the overlap of the screw-shaped slot 55 in the suction pipe 42 and the rectilinear slot 54 in the jacket 43 is transposed along the pipe member 40 during the rotation of the suction pipe.

The slot 54 in the jacket 43 of a preferred embodiment is designed so as to extend over a shorter distance than the slot 55 in the suction pipe 42. By this arrangement it is possible in a simple manner, without the use of valves, to cut off the vacuum from the suction pipe. If the suction pipe 42 is rotated to such an extent that the screw-shaped slot 55 in the pipe is moved away from the situation where the slot 55 is aligned with the slot 54 in the jacket 43, there will no longer be any connection between the inside of the suction pipe and the outside of the jacket, and the vacuum will be cut off. Likewise, the nozzles 53 in the jacket 43 extend over a shorter distance than the slot in the nozzle pipe 41. In the same manner as described above, it will thus be possible to turn off the flow of fluid from the nozzle pipe. In a preferred embodiment the mutual gearing between the nozzle pipe and the suction pipe is designed in such a manner that the flow of fluid from the nozzle pipe and the vacuum from the suction pipe are turned off simultaneously.

The figures show specific embodiments of apparatuses according to the invention for use by the method. However, the illustrated apparatuses should not be seen as a complete presentation of conceivable embodiments. Thus, other apparatus designs and other apparatus parts, which are all covered by the method and the apparatuses according to the invention, may be deduced. Besides, the method according to the invention may be used for other types of cylinders than cylinders provided with plates; and rollers and cylinders in machines other than printing machines may be cleaned by means of the method according to the invention.

CLAIMS

1. A method for automatic cleaning of a cylinder, especially a cylinder of a printing machine, in which the cylinder is provided with plates and used for printing on a print carrier made of e.g. paper, plastic film, or metal film, and in which the cylinders become smudged, during printing, with printing ink, particles detached from said print carrier such as dust or fibres, and other foreign objects, wherein an area of the cylinder surface is cleaned by exposing said area to a pressurized flow of fluid so that the foreign objects inside the area on the cylinder surface are detached, and wherein said area is exposed to a vacuum to remove said detached foreign objects and any other material deriving from said flow of fluid, c h a r a c t e r i z e d in that said cylinder surface is constituted by adjacent areas lengthwise and crosswise on the cylinder surface provided by such area extending over a minor part of the circumference of said cylinder and a minor part of the length of said cylinder, and that said adjacent areas of said cylinder surface are cleaned successively.

2. A method according to claim 1, c h a r a c t e r i z e d in that said flow of fluid is constituted by a flow of gas, preferably pressurized atmospheric air, and that granulated solid matter constituting a fluidized medium is optionally added to said gas.

3. A method according to claim 1, c h a r a c t e r i z e d in that said flow of fluid is constituted by a flow of liquid, and that granulated solid matter constituting said fluidized medium is optionally added to said liquid.

4. A method according to claim 1, c h a r a c t e r i z e d in that said flow of fluid is constituted by a liquid exposed to an ultrasonic action, and that granulated solid matter constituting said fluidized medium is optionally added to said liquid.

5. A method according to claim 1, c h a r a c t e r i z e d in that said detached particles are exposed to an electric voltage field, that the particles are charged with static electricity, and that said area on the cylinder surface is brought in contact with an electric voltage field for removal of detached particles from the cylinder surface.

6. A method according to any of the preceding claims, c h a r a c t e r i z e d in that said area of the cylinder surface is cleaned during operation of the printing machine, and that successive cleaning is carried out on a multitude of areas of the cylinder surface in order to clean the entire cylinder.

7. An apparatus for use by the method according to any of the preceding claims, c h a r a c t e r i z e d in that the apparatus comprises a boom (4) having a cleaning head (5) which comprises a first orifice (23) for supplying a pressurized fluid and which also comprises a second orifice (25) for applying a vacuum to the cylinder surface (16), said second orifice (25) being placed in immediate vicinity of said first orifice (23) and after said first orifice (23) compared to the direction of rotation of the cylinder.

8. An apparatus according to claim 6, c h a r a c t e r i z e d in that the cleaning head is provided with a chamber (20) being connected to said first orifice (23) and comprising at least two connecting devices (12,13), said devices being connected to a compressed-air system, a liquid reservoir and a solid matter reservoir.

9. An apparatus for use by the method according to any of the claims 1-6, c h a r a c t e r i z e d in that said apparatus comprises a first and a second pipe (41,42) the interiors of which are connected with a pressure source and a vacuum source, respectively, and a jacket (43), that said pipes are fixed to said jacket (43), and that at least one of said pipes (42) comprises a slot (55) extending in a screw along the pipe, and that said jacket (43) comprises a slot (54) extending in a straight line along said jacket and being connected to the outer periphery of one of said pipes (42), and that one of said pipes is connected to the vacuum source.

10. An apparatus according to claim 9, c h a r a c t e r i z e d in that said second pipe (41) also comprises a slot extending in a screw along the pipe, that said jacket (43) comprises nozzles (53) extending in a straight line along said jacket and being connected to the outer periphery of said second pipe (41), and that said second pipe is connected to the pressure source.

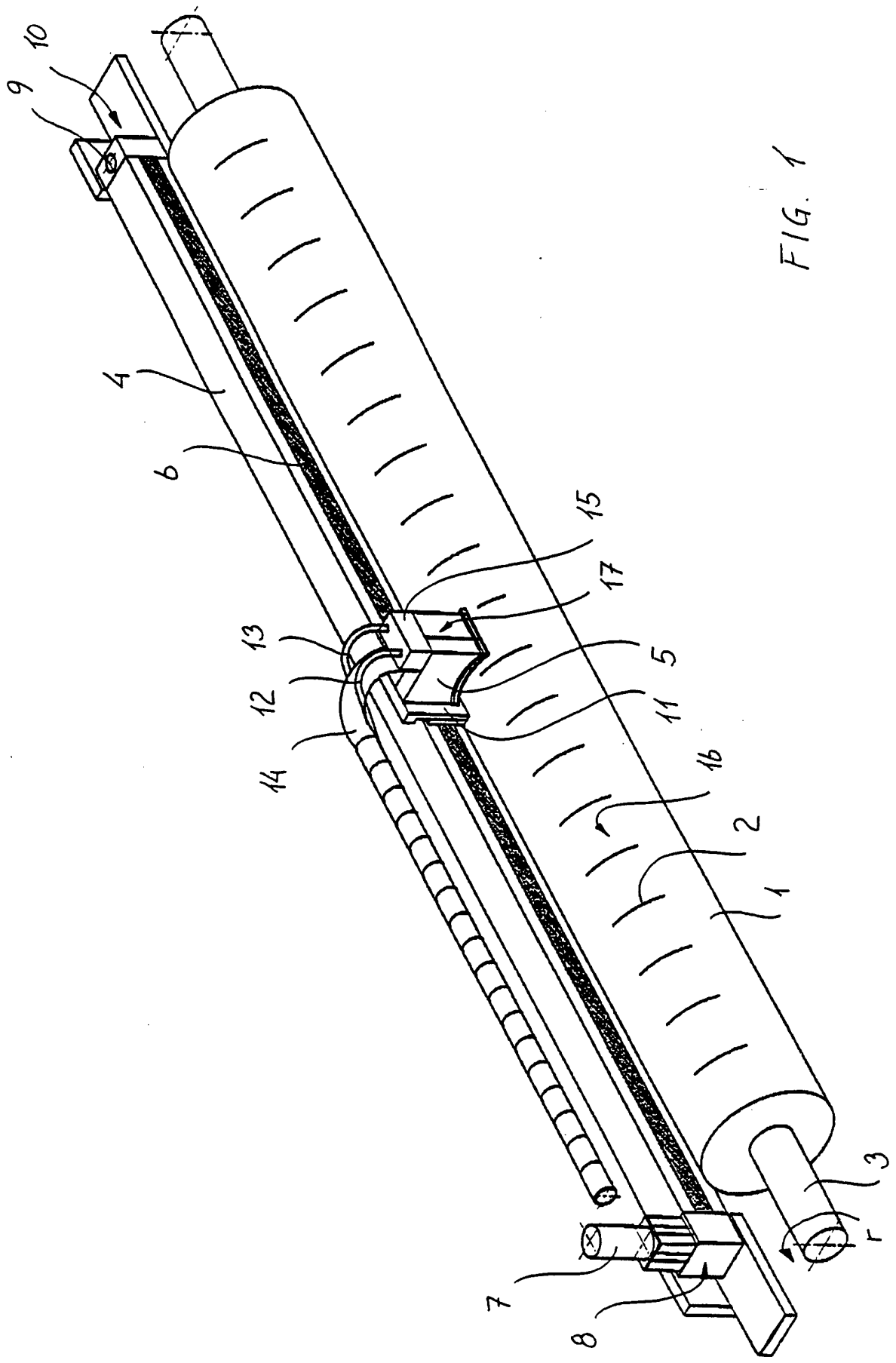

FIG. 1

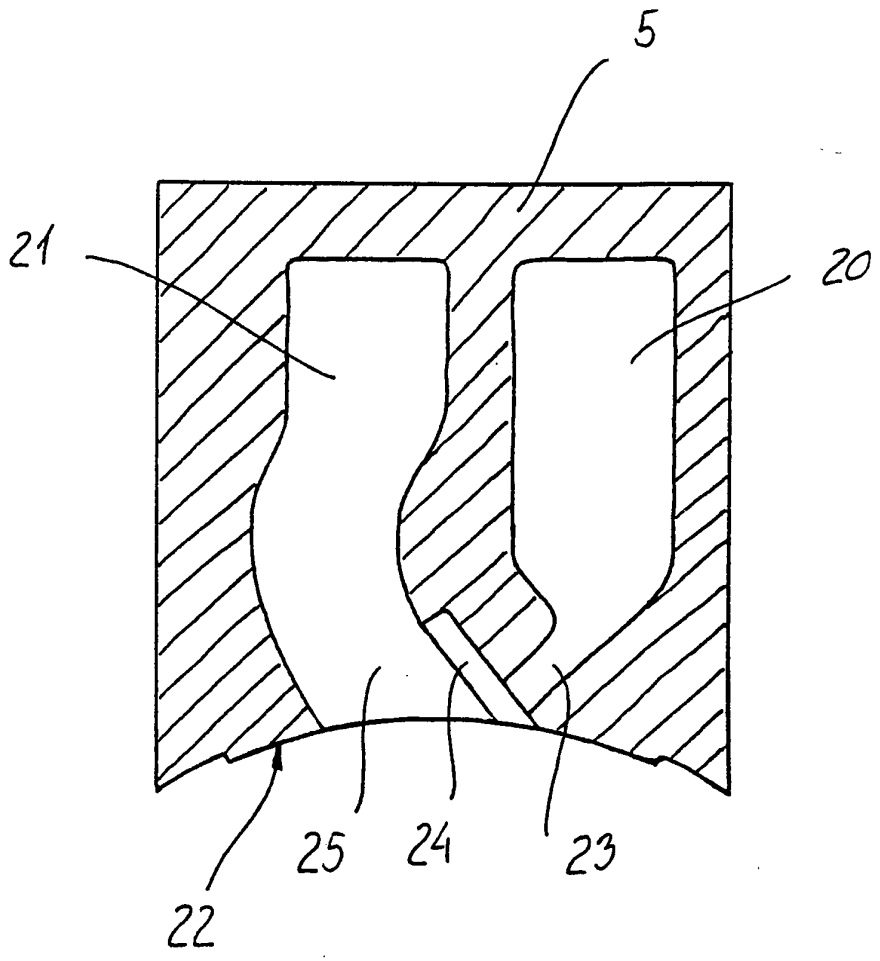

FIG. 2

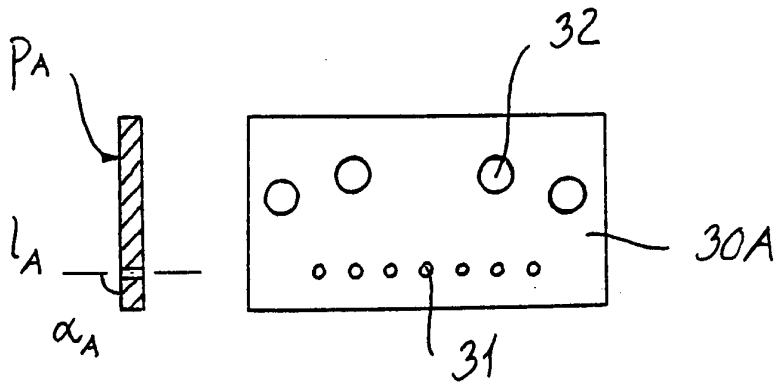

FIG. 3A

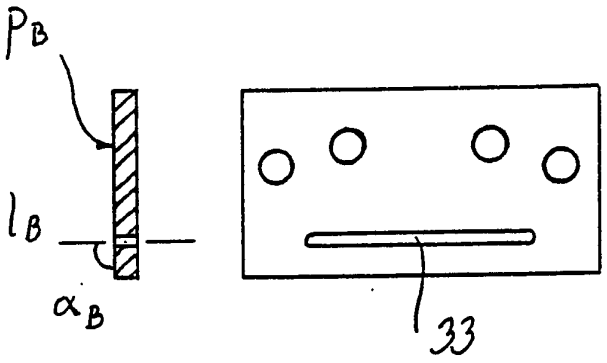

FIG. 3B

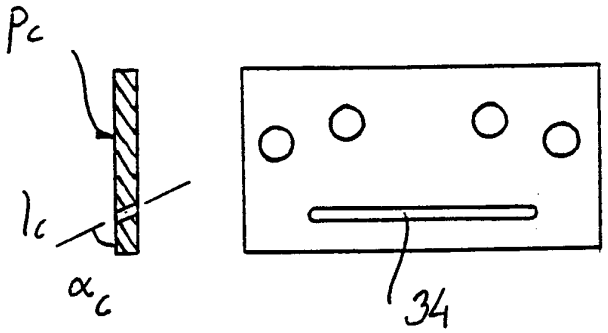

FIG. 3C

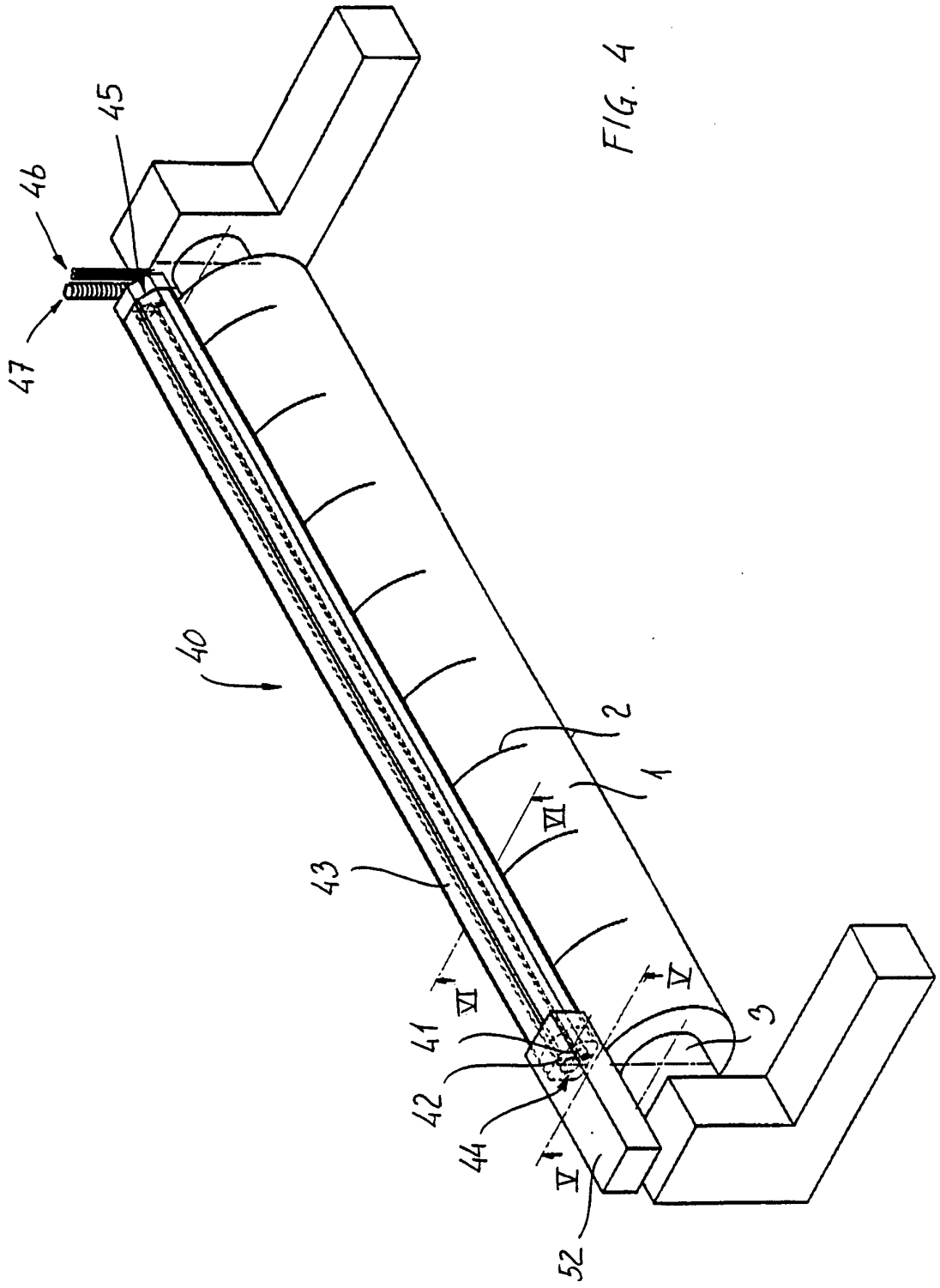

FIG. 4

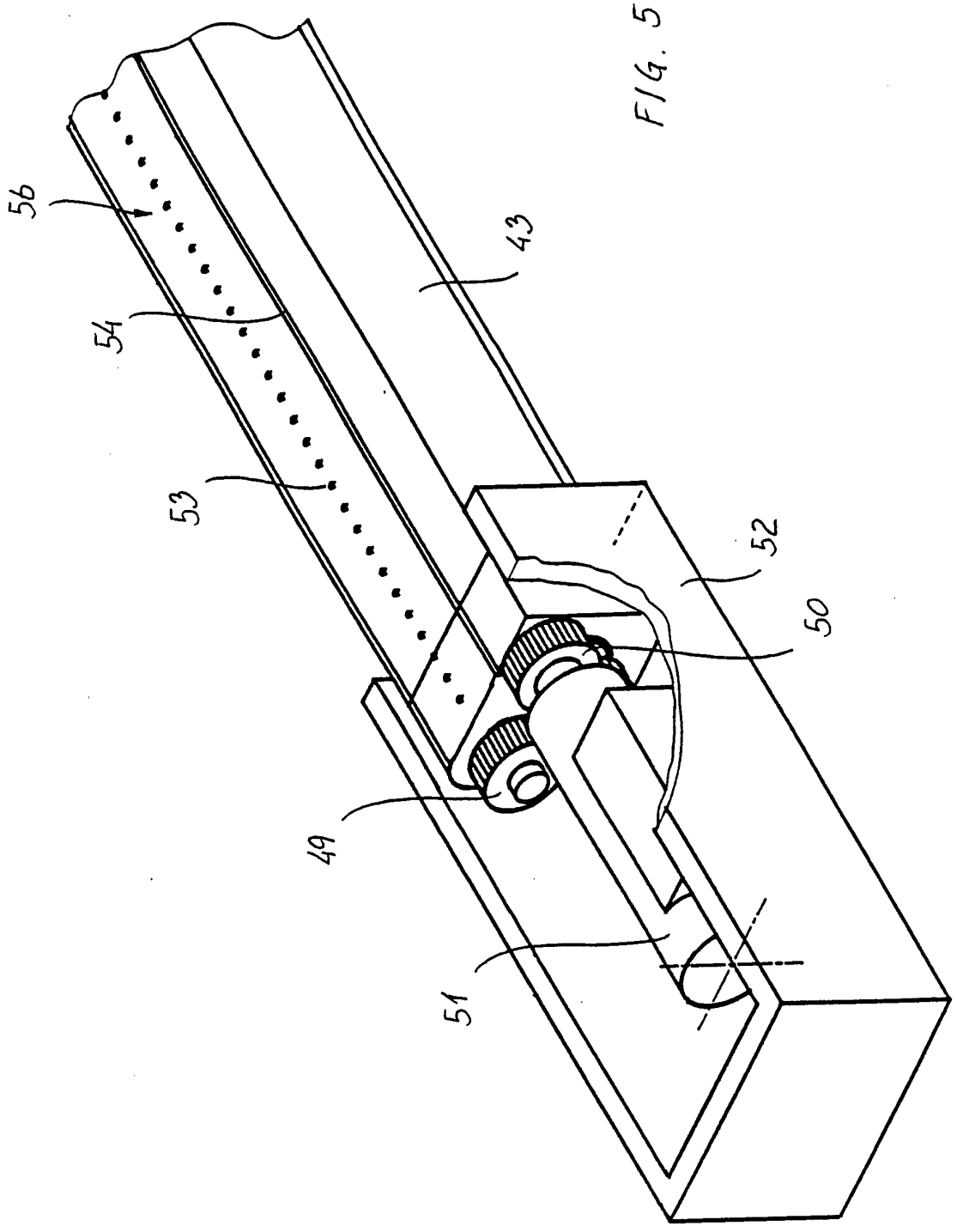

FIG. 5

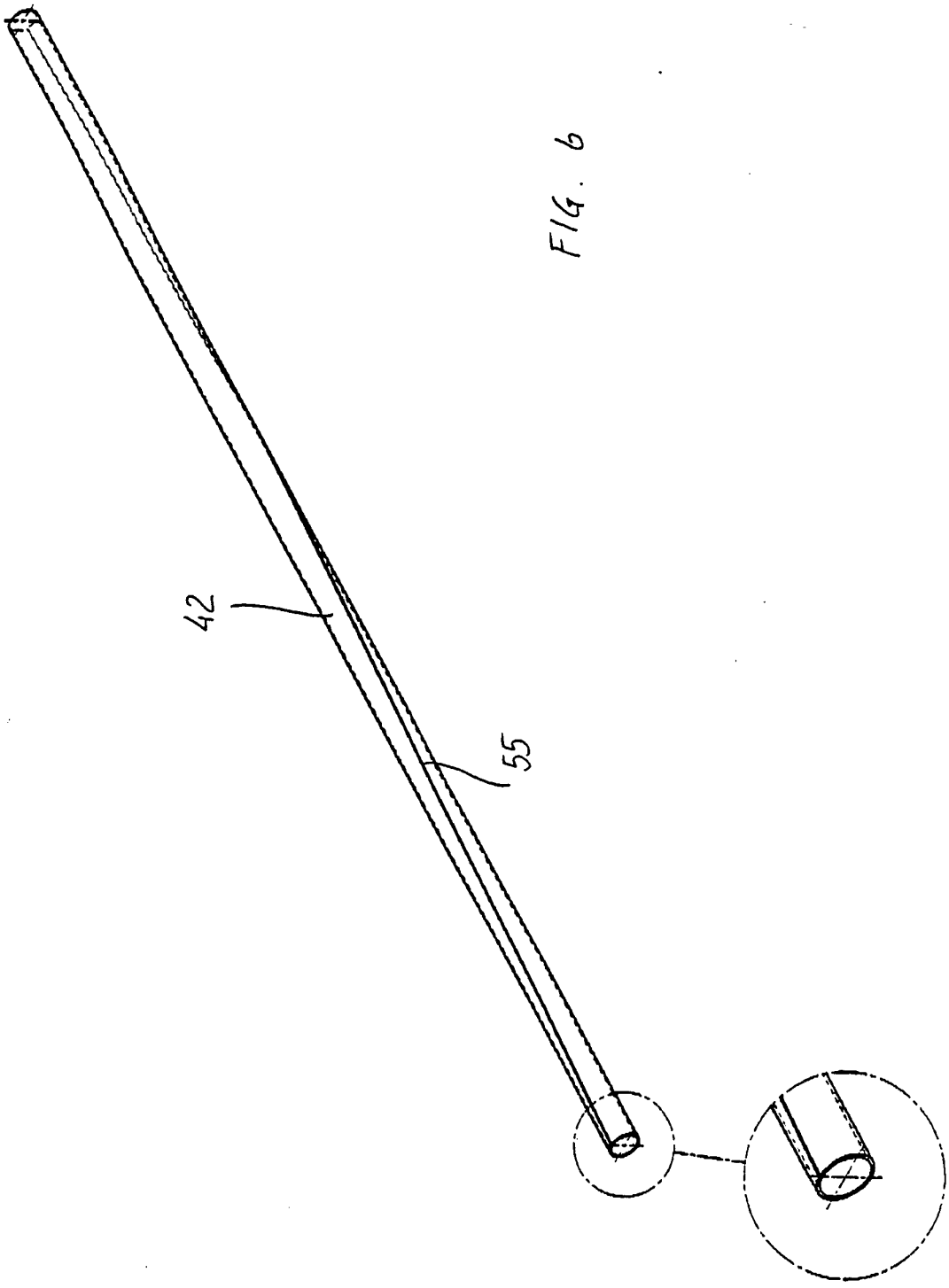

FIG. 6

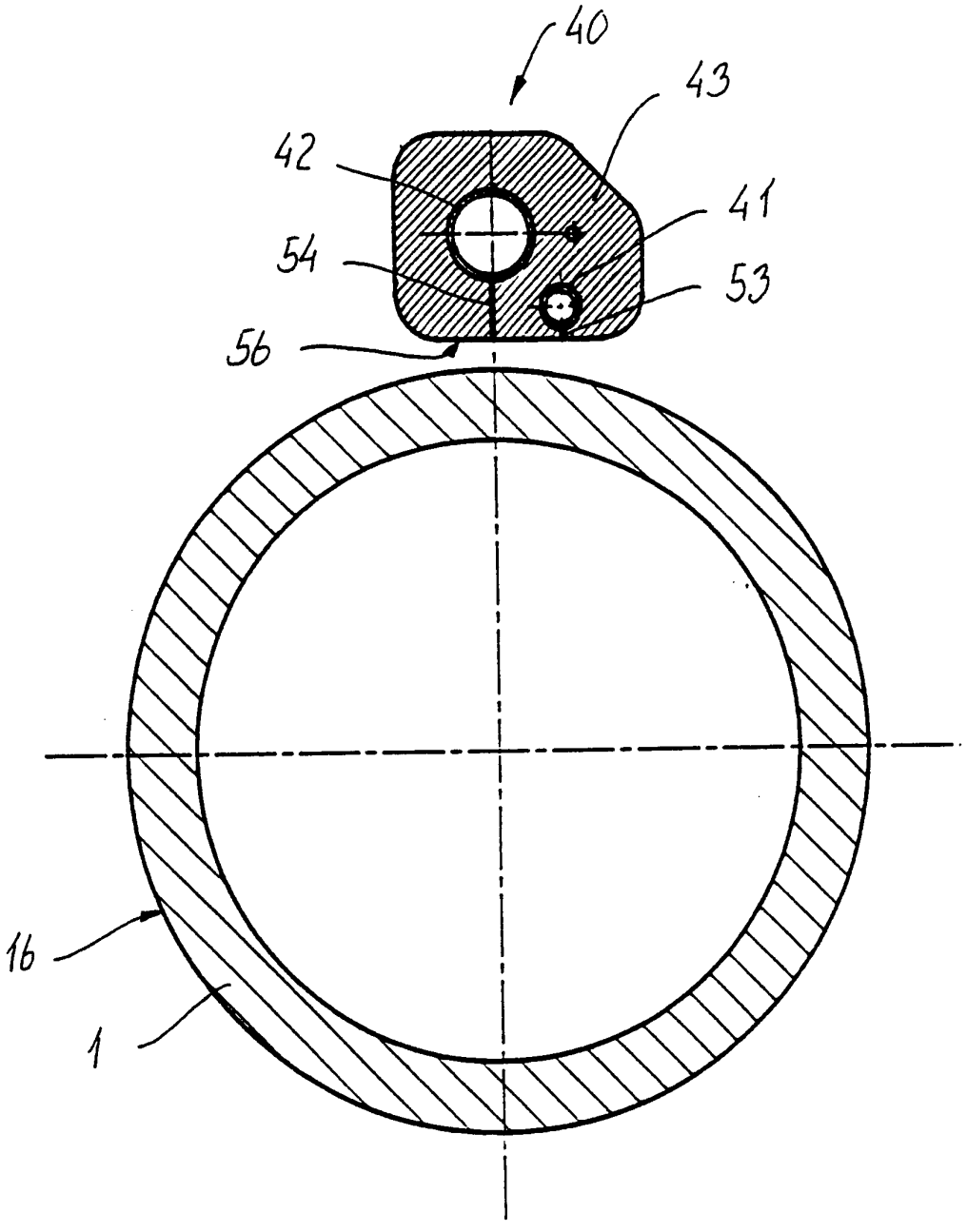

FIG. 7

INTERNATIONAL SEARCH REPORT

International application No.
PCT/DK 94/00276

A. CLASSIFICATION OF SUBJECT MATTER

IPC6: B41F 35/00
According to International Patent Classification (IPC) or to both national classification and IPC

B. FIELDS SEARCHED

Minimum documentation searched (classification system followed by classification symbols)

IPC6: B41F

Documentation searched other than minimum documentation to the extent that such documents are included in the fields searched

SE,DK,FI,NO classes as above

Electronic data base consulted during the international search (name of data base and, where practicable, search terms used)

C. DOCUMENTS CONSIDERED TO BE RELEVANT

Category*	Citation of document, with indication, where appropriate, of the relevant passages	Relevant to claim No.
X,E	WO, A1, 9412349 (SJÖBERG, S.), 9 June 1994 (09.06.94), the whole document ---	1-8
X	EP, A2, 0369565 (BALDWIN TECHNOLOGY CORPORATION), 23 May 1990 (23.05.90), figure 9, claims 21-22, abstract ---	1-6
X	Patent Abstracts of Japan, Vol 12,No 197, M-706, abstract of JP, A, 63-4947 (DAINIPPON PRINTING CO LTD), 9 January 1988 (09.01.88) --- --------	1-2,7-8

☐ Further documents are listed in the continuation of Box C. ☒ See patent family annex.

* Special categories of cited documents:
"A" document defining the general state of the art which is not considered to be of particular relevance
"E" erlier document but published on or after the international filing date
"L" document which may throw doubts on priority claim(s) or which is cited to establish the publication date of another citation or other special reason (as specified)
"O" document referring to an oral disclosure, use, exhibition or other means
"P" document published prior to the international filing date but later than the priority date claimed
"T" later document published after the international filing date or priority date and not in conflict with the application but cited to understand the principle or theory underlying the invention
"X" document of particular relevance: the claimed invention cannot be considered novel or cannot be considered to involve an inventive step when the document is taken alone
"Y" document of particular relevance: the claimed invention cannot be considered to involve an inventive step when the document is combined with one or more other such documents, such combination being obvious to a person skilled in the art
"&" document member of the same patent family

Date of the actual completion of the international search	Date of mailing of the international search report
17 October 1994	25 -10- 1994
Name and mailing address of the ISA/ Swedish Patent Office Box 5055, S-102 42 STOCKHOLM Facsimile No. +46 8 666 02 86	Authorized officer Hans Presto Telephone No. +46 8 782 25 00

Form PCT/ISA/210 (second sheet) (July 1992)

INTERNATIONAL SEARCH REPORT

Information on patent family members

01/10/94

International application No.
PCT/DK 94/00276

Patent document cited in search report	Publication date	Patent family member(s)	Publication date
WO-A1- 9412349	09/06/94	NONE	
EP-A2- 0369565	23/05/90	SE-T3- 0369565	
		DE-D- 68915398	00/00/00
		JP-C- 1769820	30/06/93
		JP-A- 2178048	11/07/90
		JP-B- 4055868	04/09/92
		US-A- 5086701	11/02/92
		US-A- 5265537	30/11/93