July 12, 1932. R. F. PARKER 1,866,667

ANÆSTHETIC INHALER

Filed July 11, 1928

Fig. 1.

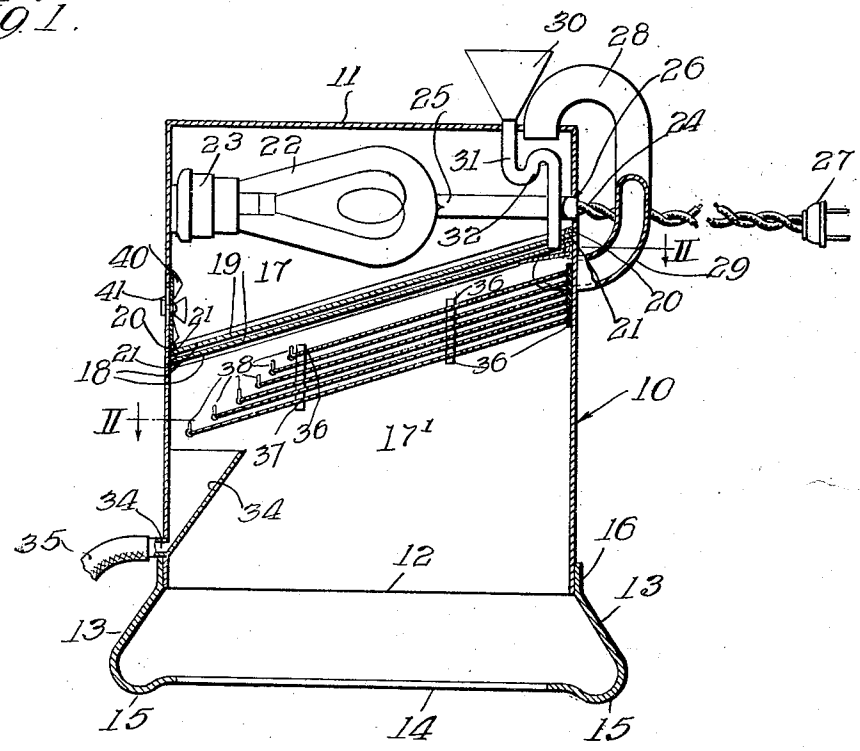

Fig. 2.

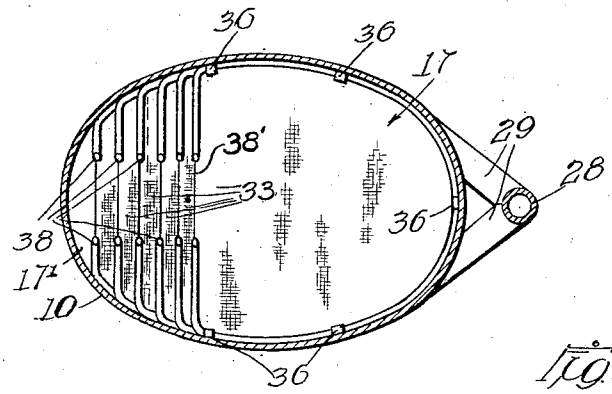

Fig. 3.

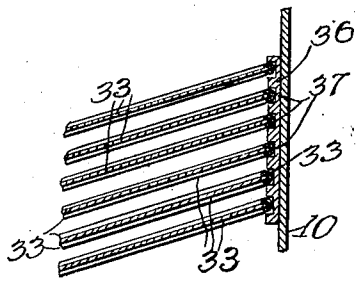

Fig. 4.

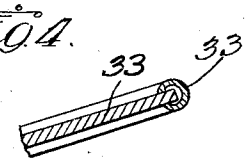

Witness:

Harry R. L. White.

Inventor:

Ruth Foster Parker.

By [signature]

Atty.

Patented July 12, 1932

1,866,667

UNITED STATES PATENT OFFICE

RUTH FOSTER PARKER, OF MINNEAPOLIS, MINNESOTA

ANÆSTHETIC INHALER

Application filed July 11, 1928. Serial No. 291,846.

This invention relates to inhalers and more particularly to anæsthetic administering means, although certain features thereof may be employed with equal advantage for other purposes.

It contemplates more especially the provision of an anæsthetic inhaler having readily removable elements to permit the cleansing and ready replacement thereof so that the anæsthetic may be administered effectively without the usual danger accompanying the administration.

The administration of the anæsthetic to the patient constitutes one of the more important features of a surgical accomplishment. Known methods of anæsthetic administration create choking and severe coughing during the period of growing unconsciousness. Further, appliances of known construction create chilling of the respiratory tract which creates an inflammatory condition which often becomes acute. An extremely dangerous surgical condition termed shock is also common, and this invention is primarily designed to preserve the condition of the patient as near normal as possible to avoid this dreaded result.

The application of heat to insure ether vaporization prior to its assimilation makes it less irritating to the kidneys, thereby tending to avoid nephritis and other kindred ills. Ether imparts the best relaxation of any known anæsthetic for major operations. The proper and correct warming and division of the ether to assume a vaporized condition of negligible density materially increases the safety with which this liquid anæsthetic may be employed.

In addition, this manner of application renders the taking more pleasant and decreases the excitement of the patient to the extent that his struggles become less, thereby insuring against injury occasioned during the unrestful state of growing unconsciousness.

It is exceedingly important that the anæsthetic be imparted in the most mild and gradual manner so as to cause the least discomfort in that such administration minimizes vomiting and severe straining which usually follows subsequent to the awakening. The nauseating condition is very prone to create substantial injury, and often renders the results of the operation nugatory. This lessens the danger of aggravating secondary existing inflammations which are more or less latent under normal conditions.

One object of the present invention is to simplify the construction and improve the operation of devices of the character mentioned.

Another object is to provide a device which is effective to vaporize an anæsthetic so as to enable a most mild and harmless administration thereof.

Still another object is the provision of means for effecting the vaporization of an anæsthetic prior to its administration in a manner to insure against liquid inhalement.

A further object is the provision of a device which effects the vaporization of a liquid anæsthetic in a manner to preclude its assimilation in its original state.

A still further object is the provision of a device having detachably associated absorbent sheets which insure the vaporization of the anæsthetic prior to its administration.

Still a further object is the provision of means for conducting heat to a vaporization compartment through branched conduits to effect a uniform elevation of the temperature therein.

Other objects and advantages will appear from the following description of an illustrated embodiment of the present invention.

In the drawing:

Figure 1 is a sectional view in elevation of a device embodying features of the present invention.

Figure 2 is a sectional view taken substantially along line II—II of Figure 1.

Figure 3 is an enlarged detail view of the absorbent sheet attaching means shown in section.

Figure 4 is an enlarged view of a single absorbent sheet reinforcing member.

The structure selected for illustration consists of a casing 10 stamped or otherwise shaped from sheet material to devise a substantially elliptical member conforming in

shape to the contour of an individual's countenance. As shown, the casing 10 is provided with an enclosed end 11 confronting a mouth 12 of the casing 10 to receive a yieldable diaphragm 13.

The diaphragm 13 is shaped to define an elliptical orifice 14 which envelopes the mouth and nose of the individual in such a manner as to create a hermetic seal with the surface owing to the projecting rim 15 which is composed of yieldable material capable of deformation to conform with the contour of the surface. The diaphragm 13 is adhesively or otherwise associated with the casing 10 which has the orifice edge thereof jointed with a correspondingly sized flange 16 provided on the diaphragm 13 to effect a hermetic seal therebetween. With the application of the diaphragm 13 to the individual's countenance, the casing 10 serves as a facial mask which precludes exposure of the respiratory organs to the atmosphere or oxygen contained therein. As a consequence, the individual is compelled to draw the vapor medium or anæsthetic confined within the casing 10 into the system for the purpose of producing unconsciousness.

The anæsthetic constitutes, in this instance, an ether vapor which is produced with the aid of instrumentalities constituting novel features of this invention. To this end the casing 10 is provided with compartments 17 and 17′ which are defined by a pair of spaced partitions 18 disposed at a suitable inclination to permit the reception of an anæsthetic carrier within the compartment 17 in substantial parallelism thereto. The partitions 18 are preferably composed of sheet material having suitable insulation such as asbestos sheets 19 on the surfaces thereof to preclude the transmission or conduction of heat therethrough. The partitions 18 are preferably maintained in position by means of lugs 20 disposed about the periphery of the casing 10, they being provided with notches 21 to receive the partition strips therein for convenient removal to effect the replacement or cleansing thereof by mere flexing.

The heating compartment 17 is provided with any suitable temperature elevating device, in this instance an incandescent lamp 22 which carries a socket 23 of standard construction secured to the interior surface of the casing 10 on the side thereof which has the greatest depth owing to the inclined partitions 18. The socket 23 communicates with connecting leads 24 constituting electrical conductors enveloped in suitable conduits 25 which embrace the interior of the casing along the circumference thereof. The conductor 24 projects through an aperture 26 provided within the casing 10 opposite the socket 23 so that a plug 27 may be secured to an extension thereof for attachment to any electrical source in the customary manner.

The heat developed by the lamp 22 is conducted to the anæsthetic compartment 17′ through a conduit 28 which communicates with the end closure 11 of the casing 10 for projection therethrough near the edge thereof, in this instance diametrically opposite the socket 23. It is to be noted that the conduit 28 terminates in branched portions 29 which project through the lateral walls of the casing 10 at spaced points to deliver heated air to the anæsthetic compartment 17′ just below the partitions 18 provided therein. The liquid anæsthetic is supplied to the compartment 17′ through a funnel 30 which communicates with a conduit 31 projecting through the top 11 and the partitions 18 near the wall of the casing 10 just above the air discharge orifice of the branched conduits 29.

As shown, the conduit 31 is provided with a trap 32 intermediate the ends thereof to increase the extent of anæsthetic travel for disposition within the heating compartment 17 so that the heat conducted thereto will vaporize the liquid anæethtic carried therein for transmission to the compartment 17′. In order to effect the complete, rapid vaporization and fine division of the anæsthetic particles, an absorbent carrier is provided in the compartment 17′ to receive the anæsthetic from the supply conduit 31. The carrier comprises, in this instance, a series of superposed absorbent sheets 33 composed of gauze or other like material which is tensioned in a reinforcing edge member 33′ for securing to the walls of the casing 10 in an inclined position parallel to the partitions 18. The absorbent sheets 33 are superposed and of varying lengths so that the drip of the uppermost sheet 33 will be lodged on the underlying absort carrier. This drip continues until the excess liquid deposited thereon from the tube 31 will be collected in a drain 34 which communicates with an orifice 34′ provided in the wall of the case 10 for conveying the excess anæsthetic through a tube 35 for re-use or other secondary purposes. The absorbent sheets 33 are preferably disposed within the compartment 17′ for detachable association therewith to enable the convenient and ready replacement and cleansing thereof.

The absorbent sheet supporting means consists of elongated strips 36 which are spaced about the interior periphery of the casing 10 to receive a series of uniformly spaced notches 37 disposed vertically therein. The notches 37 of the respective strips 36 are so related as to receive the reinforcing member 33′ of the absorbent sheets 33 therein for maintaining the sheets 33 in a fixed inclined position. As shown, the absorbent sheets terminate within a variable distance from the opposing wall to receive an upstanding edge 38 notched centrally as at 38′ to preclude the spilling of the liquid anæsthetic thereover, but the saturation thereof will permit the excess liquid to

drip therefrom through the notched portion 38′ for reception on the succeeding underlying sheet until discharged to the drip pan 34 for collection.

It is of utmost importance to take cognizance of the fact that the branched conduit 29 projects through the lateral wall of the casing 10 for directing the heated air against the absorbent sheets 33 to effect the vaporization of the anæsthetic contained thereon. In order to control the degree of vaporization, the amount of air introduced within the heating compartment 17 is regulated by a rotary shutter 40 which cooperates with correspondingly spaced, radially related apertures 41 provided in the wall of the casing 10 to enable the variable admission of air within the compartment 17. This controls the rate of vaporization independently of the supply of liquid anæsthetic through the funnel 30.

With the arrangement of parts above described it will be apparent that a novel device has been provided to insure the effective vaporization of a liquid anæsthetic and its proper assimilation by the patient. Anæsthetics in a vaporized state are rendered more readily administrable without the usual hazards and injurious effects attending the accomplishment of gradual unconsciousness. The parts of the device are readily replacable to effect the renewal thereof as well as cleansing which is an important factor in appliances of the character described.

Various changes may be made in the embodiment of the invention herein specifically described without departing from or sacrificing any of the advantages thereof as defined in the appending claims.

I claim:

1. In an inhaler, the combination with a casing constituting a facial mask, a yieldable diaphragm associated with said casing to create a hermetic seal in the application thereof, a heating compartment, an incandescent bulb in said heating compartment, an anæsthetic compartment, a branched tube connecting said heating and anæsthetic compartments, a shutter for regulating the air supply to said heating compartment, an anæsthetic carrier in said anæsthetic compartment, and means for directing a fluid anæsthetic to said carrier.

2. In an inhaler, the combination with a casing constituting a facial mask, a yieldable diaphragm associated with the bottom of said casing to fit the face, a heating compartment located in the upper portion of said casing, a partition dividing said heating compartment from the lower portion of the casing, thereby forming the lower portion thereof into an anæsthetic compartment, a funnel on top of said casing and having a conduit extending downwardly through said heating chamber and through said partiton into the lower portion of said casing, a trap in said conduit located within said heating chamber, superposed inclined absorbent sheets in said anæsthetic compartment, the lower of said sheets extending beyond the lower ends of the upper ones, means for admitting air to said heating compartment, and a connection between the heating compartment and said anæsthetic compartment.

3. In an inhaler, the combination with a casing constituting a facial mask, a yieldable diaphragm associated with the bottom of said casing to fit the face, a heating compartment located in the upper portion of said casing, a partition dividing said heating compartment from the lower portion of the casing, thereby forming the lower portion thereof into an anæsthetic compartment, a funnel on top of said casing and having a conduit extending downwardly through said heating chamber and through said partition into the lower portion of said casing, a trap in said conduit located within said heating chamber, superposed inclined absorbent sheets in said anæsthetic compartment, the lower of said sheets extending beyond the lower ends of the upper ones, controllable means for admitting air to said heating compartment, and a branched tube connecting the upper portion of said heating chamber with the upper portion of said anæsthetic compartment.

4. In an inhaler, the combination with a casing having a facial mask at its bottom, a heating compartment located in the upper portion of said casing, a partition dividing said heating compartment from the lower portion of the casing, thereby forming the lower portion thereof into an anæsthetic compartment, means for heating said heating compartment, a conduit for anæsthetic extending through said heating compartment and opening into said anæsthetic compartment, a connection between the heating and anæsthetic compartments, and means for admitting air to said heating compartment.

RUTH FOSTER PARKER.