W. B. D. PONNINGHAUS.

APPARATUS FOR THE SUPPLY OF HOT WATER OR STEAM.

APPLICATION FILED AUG. 21, 1912.

1,070,175. Patented Aug. 12, 1913.

2 SHEETS—SHEET 1.

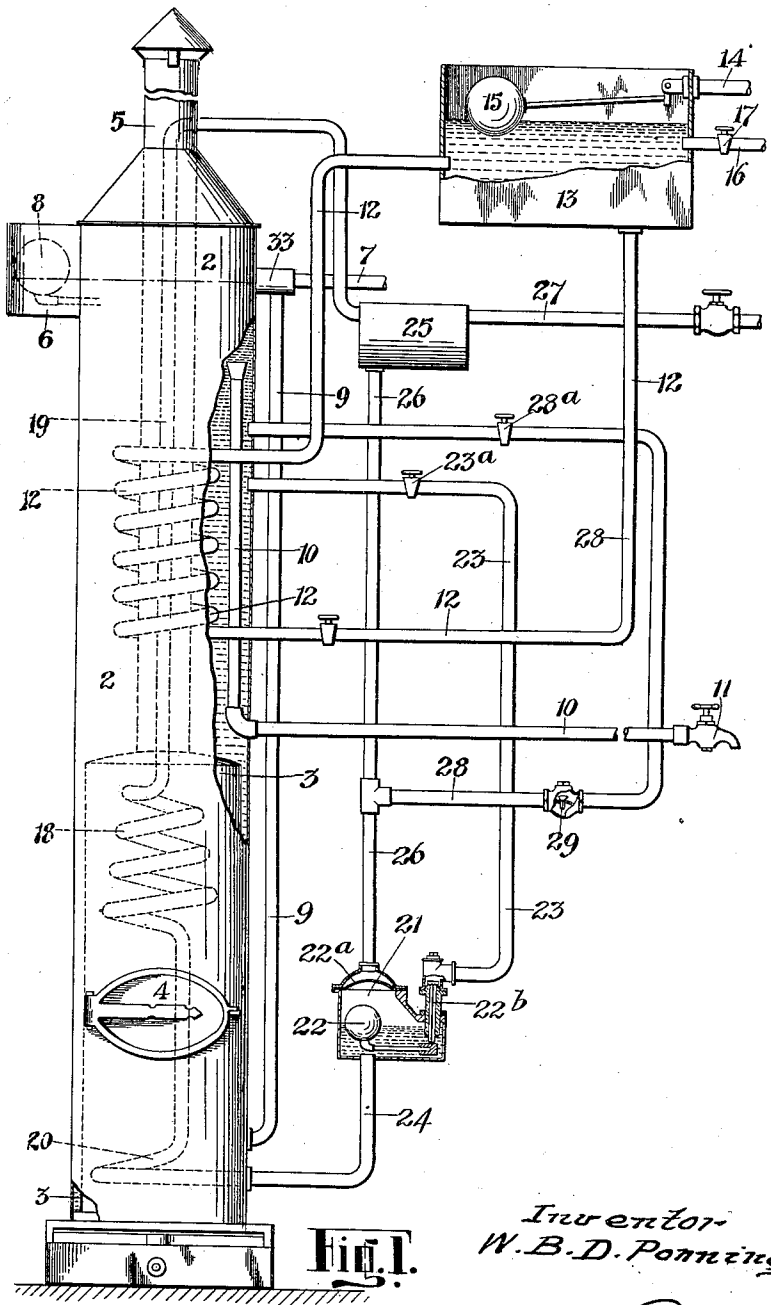

Fig. 1.

Inventor
W. B. D. Ponninghaus

Witnesses
W. A. Williams
F. Cornwall

by Jno. Mirie
Atty.

COLUMBIA PLANOGRAPH CO., WASHINGTON, D. C.

W. B. D. PONNINGHAUS.

APPARATUS FOR THE SUPPLY OF HOT WATER OR STEAM.

APPLICATION FILED AUG. 21, 1912.

1,070,175.

Patented Aug. 12, 1913.

2 SHEETS—SHEET 2.

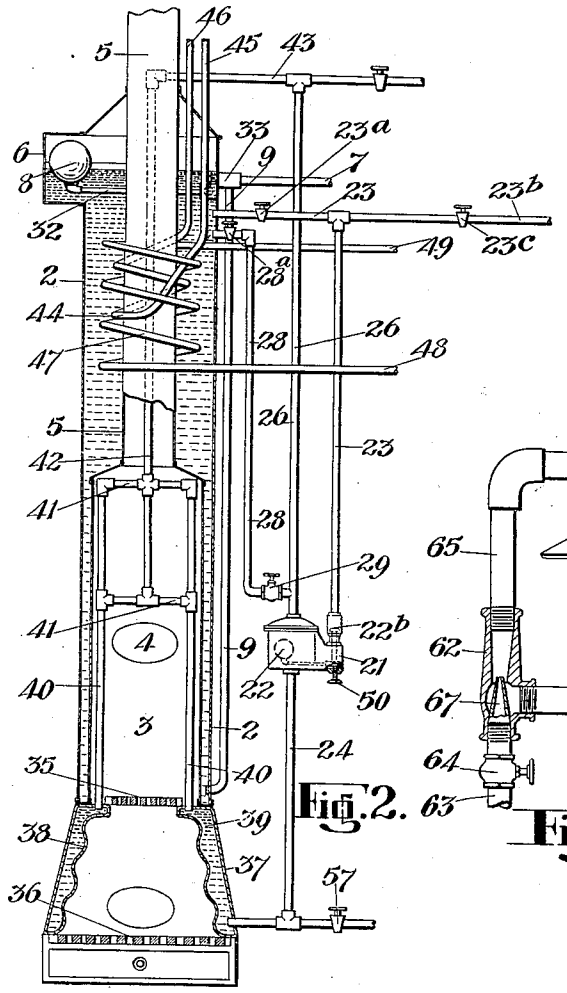

Fig. 2.

Fig. 4.

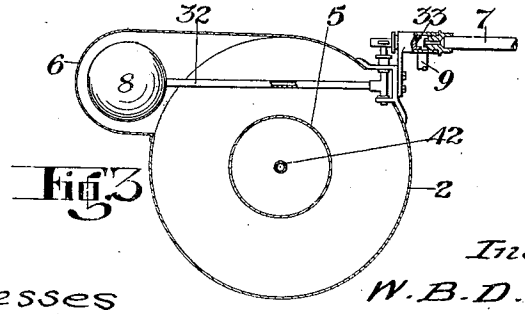

Fig. 3.

Witnesses
W. A. Williams
H. Cornwall

Inventor
W. B. D. Ponninghaus
By Munn & Co
Attys

COLUMBIA PLANOGRAPH CO., WASHINGTON, D. C.

UNITED STATES PATENT OFFICE.

WILHELM BARTHOLDT DIDRICK PONNINGHAUS, OF SOUTH YARRA, PRAHRAN, MELBOURNE, VICTORIA, AUSTRALIA, ASSIGNOR OF ONE-HALF TO JOHN ALSTON WALLACE, OF BOOABULA, AUSTRALIA.

APPARATUS FOR THE SUPPLY OF HOT WATER OR STEAM.

1,070,175. Specification of Letters Patent. Patented Aug. 12, 1913.

Application filed August 21, 1912. Serial No. 716,323.

To all whom it may concern:

Be it known that I, WILHELM BARTHOLDT DIDRICK PONNINGHAUS, a subject of the King of Great Britain and Ireland, residing at 132 Toorak road, in the post-town of South Yarra, a district of the city of Prahran, a suburb of the city of Melbourne, in the county of Bourke, State of Victoria, Commonwealth of Australia, have invented certain new and useful Improvements in and Connected with Apparatus for the Supply of Hot Water or Steam, of which the following is a specification.

This invention has for its object to provide an apparatus for producing hot water and generating steam in a simple and economical manner.

The apparatus is cheap in first cost and also in maintenance, positive in action not liable to derangement and automatically supplied with cold water to be heated and to be converted into steam.

The invention is extremely advantageous in meeting both large and small requirements and may be controlled or regulated according to the demand upon the supply of either the hot water or steam.

Referring to the drawings which form a part of this specification:—Figure 1 is a side elevation of one form of this invention. Portion is shown in section and part in broken lines for convenience of illustration. Fig. 2 is a side sectional elevation of another form of this invention. Fig. 3 is a sectional plan of a shell or boiler to show the control of the water supply to the said shell. Fig. 4 is a view of a shower and a hot and cold water intermixing and elevating device therefor usable with this invention.

The invention includes (Fig. 1) a heater or boiler consisting of a vertical shell 2 having a fire box 3 therein provided with a fire door 4. From the fire box 3 passes a flue 5 which also passes upwardly through the shell 2. Forming portion of the top of the shell is a heater cistern or float chamber 6 communicating with a cold water supply pipe 7 controlled in a suitable manner by a pivotally arranged ball float 8 within the said cistern. The float 8 may be of any desired self draining character. From the supply pipe 7, and controlled by movement of the float, passes a heater feed pipe 9 which communicates with the shell 2 near the bottom of the same. Within the said shell 2 is a hot water delivery pipe 10 controlled by a tap 11 or the like. The said pipe 10 may have a funnel shaped top as shown and its lower end may be conveyed where desired. Or the said pipe need not be within the shell 2.

Within the shell 2, above the fire box 3, and coiled around the flue 5 is a hot water circulating coil 12. The upper end of the coil passes from the shell 2 to a hot water cistern 13. The lower end of the coil 12 passes from the shell 2 to the bottom of the said cistern 13. Communicating with the cistern 13 is a cold water supply pipe 14 controlled in any suitable manner, by a ball float 15. The float 15 may be of any desired self draining character. From the said cistern passes a hot water supply pipe 16 having a draw off tap 17. Water entering the cistern 13 through the cold water supply pipe 14 continuously circulates through the heating coil 12 and back to the cistern from which it may be withdrawn in a heated state by means of the tap 17. The arrangement is such that the coil 12 cannot become injured by heat, even though empty of water.

Within the fire box 3 is a steam generating coil 18 having an upper end 19 and a lower end 20. The upper end 19 passes upwardly through and out of the flue 5. Or instead of the said coil suitable tubes may be used arranged in any suitable manner. With the steam generating coil is used a feed cistern 21 within which is pivotally arranged a ball float 22. Above the float 22 is a baffle plate 22^a. The float may be of any desired self draining character and, by a valve 22^b, controls a water pipe 23 in communication with the heater shell 2. Upon the said pipe is a tap 23^a. Passing from the feed cistern 21 is a water supply branch 24 which communicates with the lower end 20 of the steam generating coil 18. The upper end 19 of the coil 18 communicates with a steam box or chamber 25. Communicating with the steam box 25 and the feed cistern 21 is a steam branch pipe 26 to equalize the pressure in the coil 18 and cistern 21. The said steam box 25 also communicates with a main steam delivery pipe 27. In communication with the steam box, or the steam branch pipe 26 is a safety

pipe 28 controlled by a non-return valve 29 and communicating with the heater shell 2, and having a tap 28^a.

With the invention so far described cold water automatically regulated by the ball float 8 enters the shell 2 through the feed pipe 9 and is heated by means of the fire box 3. Water passes from the heater to the fed cistern 21 through the pipe 23. From the feed cistern it passes through the supply branch 24 to the lower end 20 of the generating coil 18. Steam is generated and accumulates in the steam box or chamber 25. It passes up through the flue 5 to the said steam box 25 and the main delivery pipe 27 for use. Any water accumulating in the steam box 25 passes down the steam branch pipe 26 to the feed cistern 21. The baffle plate 22^a prevents such water interfering with the operation of the float 22. By the steam branch pipe 26 pressure in the steam coil 18 and the feed cistern is equalized and should the steam not be required, and the passage through the supply pipe 27 be checked, the steam will pass down the pipe 26 and lifting the valve 29 pass through the pipe 28 to the shell 2 and assist to heat the water therein. The float 22 rises or falls according to the level of water in the lower end of the coil 18 and admits water to the cistern 21 through the pipe 23 and valve 22^b as required, in order that the same level may obtain in both the cistern 21 and the steam generating coil.

Should an over supply of steam take place the non return valve 29 is automatically elevated by the pressure and the surplus escapes through the safety pipe 28 to the shell 2. When high pressure steam is required it may be necessary to connect the pipes 23 and 28 to an overhead tank, cistern, cylinder or the like in order to provide a head of water upon the valves 22^b and 29 and prevent the steam pressure lifting them inadvertently.

Hot water is generated in the hot water coil 12 and by the circulation described maintains the water in the cistern 13 in a heated condition. A hot water supply is therefore obtainable from the tap 17.

In a modified form (Figs. 2 and 3) the vertical shell or boiler 2 is, as already described, provided with a float chamber 6 at its top in which is a float 8 having a pivoted lever 32 controlling a valve 33. This valve controls the entrance of water from the water supply main 7 to the heater down feed pipe 9 the lower end of which communicates with the shell 2 at or near its bottom. The fire box 3 is provided in its base, hereinafter described, with upper fire bars 35 and lower fire bars 36. A steam generator is also provided at the bottom of the vertical shell 2. This includes a base or outer shell 37 having a corrugated inner wall 38 forming the bottom portion or base of the fire box. Formed between the outer shell 37 and the inner wall 38 is a hot water chamber 39. Upstanding from and communicating with the chamber 39 is a plurality of side tubes 40 communicating with each other by cross tubes 41. In communication with the cross tubes 41 is a center tube 42 passing upwardly through the flue 5 of the heater. The center tube 42 communicates with a steam delivery pipe 43. Within the shell 2 and coiled around the flue of the heater is an inner heating coil 44 having an inlet end 45 and a delivery end 46. Coiled around the inner heating coil 44 is an outer circulating heating coil 47 having an inlet end 48 and a delivery end 49.

With the foregoing is used the feed cistern 21 already described. The water inlet valve 22^b of the said cistern is however provided with a hand control 50 of any suitable character. Communicating with the said feed cistern above the valve 22^b is the hot water pipe 23 also in communication with the shell 2 at or near its upper end. Between the steam delivery pipe 43 and the feed cistern 21 passes the steam branch pipe 26. Communicating with the steam branch pipe 26 is the safety pipe 28 having the non return relief valve 29. This may be also hand controlled in any suitable way. Passing from the feed cistern 21 is the water supply pipe 24 which communicates with the hot water chamber 39 and may be provided with a sludge cock 57.

With the modified invention, as just described, it is plain that water from the main 7 may pass through the down pipe 9 into the shell 2 filling the same and eventually raising the float 8. The float by the valve 33, permits water to enter, as it the said float, rises or falls, as is obvious.

Should it be desired to generate both hot water and steam the upper fire bars 35 are removed from the fire box. The heat of the fire then heats the water within the hot water chamber 39 and tubes 40. Steam is thereby generated in the tubes and passing through the center tube 42 is delivered through the pipe 43. Should the steam not be in actual use it will, owing to confinement within the pipe 43, enter the branch 26 and lift the relief valve 29 as already described. As the water level in the tubes 40 falls, the level in the feed cistern 21 also falls and with it the float 22. The valve 22^b is thereby raised permitting water from the shell 2 to pass through the pipe 23 into the feed cistern from which it is delivered by the pipe 24 to the hot water chamber 39. Should the steam pressure become excessive it operates the relief valve 29 and passes through the safety pipe 28 into the shell 2 assisting to heat the water therein as already mentioned. The steam generator is therefore safe and entirely automatic in action. Water enter-

ing either of the steam coils 44 and 47 is heated by the heat radiating from the flue 5 of the heater and also by the hot water contained in the shell 2. The coil 47 is a circulating coil and the water therefrom may be used for such purposes as heating rooms or the like by means of radiators.

Should it be desired not to generate steam but to have a greater supply of hot water the feed cistern 21 is practically thrown out of operation by lifting the valve 22^b by means of the hand control 50. The relief valve 29 is closed by any suitable hand control and the taps 23^a and 28^a are also closed. It is necessary to provide an independent water supply for the feed cistern 21 and this is effected by means of a branch pipe 23^b communicating with the pipe 23 and having a control tap 23^c. The pipe 23^b may communicate with any suitable cistern or the like. The upper fire bars 35 are placed in position and the fire built thereon. The circumferential hot water chamber 39 is not now directly heated by the fire. With the valve 22^b open and the valve 29 closed and the taps 23^a and 28^a closed and the tap 23^c open, water passes through the pipe 23^b, the pipe 23, feed cistern 21 and the supply pipe 24 to the chamber 39, tubes 40, 41, 42 and is delivered through the pipe 43. The hot water also circulates through the pipe 26. The steam system may therefore be readily converted into a hot water system.

It is to be understood that the invention may be somewhat modified by additional branch pipes and taps or the like and under some circumstances it may be necessary to use an overhead tank or the like for feeding purposes. In this connection when hot water is desired for a bathroom (Fig. 4) a hot water inlet pipe 60 controlled by a cock 61 may be provided. This communicates with the shell 2. It also communicates with the shell 62 of an intermixer and elevator having a cold water inlet pipe 63 controlled by a cock 64, and a hot water outlet pipe 65 communicating with a shower 66. Within the shell 62 and disposed between the pipes thereof is a hollow cone 67. The cold water pipe 63 leads from a pressure main or the like so that pressure water passes through the cone 67 upon manipulation of the cock 64 and a cold shower is obtainable; but upon opening the cock 61 hot water will be drawn from the shell 2 and passing into the shell 62 provide a hot shower the temperature of which is variable by operation of the cocks 61 and 64.

Having now described my invention what I claim as new and desire to secure by Letters Patent is:—

1. In an apparatus of the class described, the combination of a casing, a fire box in the lower part of the casing and spaced from the walls of the latter to form a water heating chamber, a shell extending upwardly from the fire box and spaced from the walls of the casing to provide a second water heating chamber wholly independent of the first mentioned water heating chamber, said shell communicating with the fire box, a flue extending from the shell and extending through the casing, tubes in the shell and communicating with the first mentioned water heating chamber, a pipe common to said tubes and extending through the casing, and means for separately supplying the water heating chambers with water.

2. In an apparatus of the class described, the combination of a casing, a fire box in the casing, said fire box being spaced from the walls of the casing, upper and lower grate bars in the fire box, the space formed between the fire box and the casing forming a water heating chamber, vertical tubes communicating with the water heating chamber, a pipe common to the vertical tubes and extending through the casing, and means for supplying the water heater with water.

3. In an apparatus of the class described, comprising a casing, a corrugated fire box in the bottom of the casing and spaced from the walls of the latter to form a water heating chamber, a shell communicating with the fire box, a flue communicating with the shell, vertical tubes in the shell communicating with the water heating chamber, cross tubes connecting the vertical tubes, and a tube connecting the cross tubes and extending through the flue and the casing.

In testimony whereof I affix my signature in presence of two witnesses.

WILHELM BARTHOLDT
DIDRICK PONNINGHAUS.

Witnesses:
GEORGE A. MCREN.
ALAN MCEACHEN.

Copies of this patent may be obtained for five cents each, by addressing the "Commissioner of Patents, Washington, D. C."