April 2, 1935. E. H. JÄHNE 1,996,206

DEVICE FOR WRAPPING CIGARETTES AND SIMILAR ARTICLES

Filed Jan. 6, 1933 2 Sheets-Sheet 1

Fig.1.

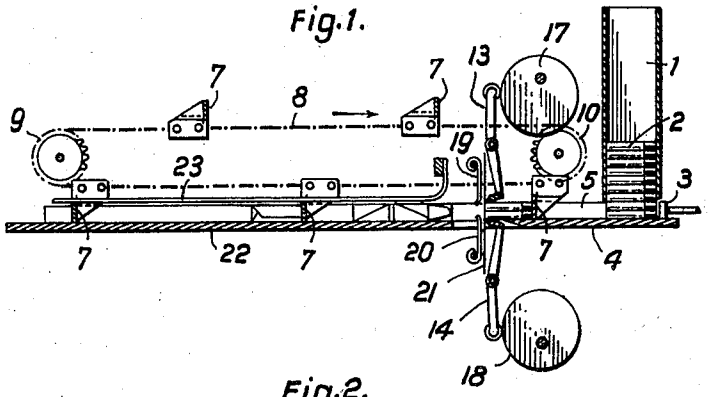

Fig.2.

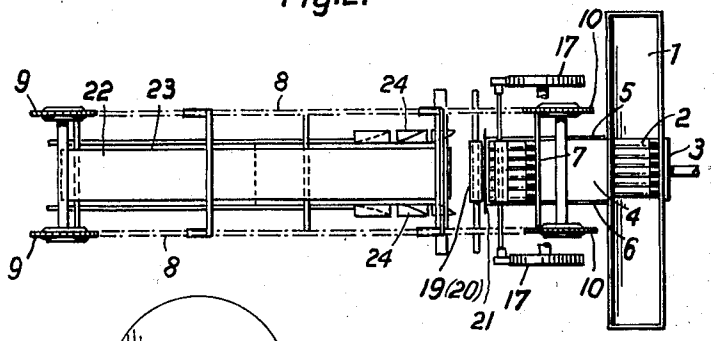

Fig.3.

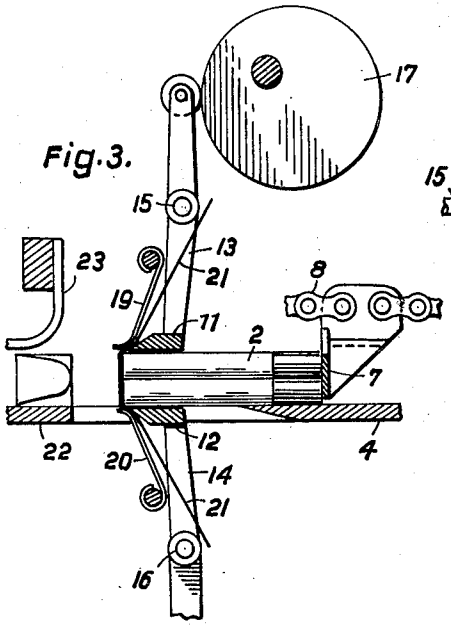

Fig.4.

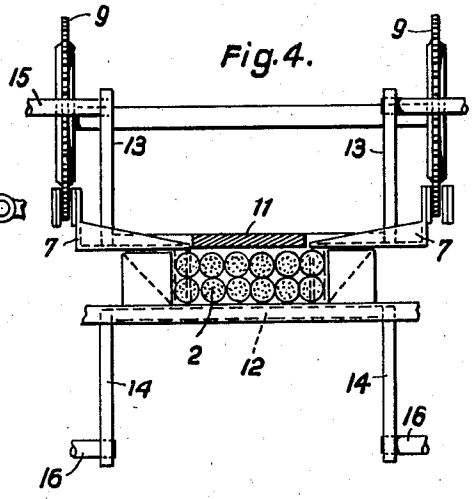

INVENTOR:

Ernst Hermann Jähne

By [signature]

Attorney

April 2, 1935. E. H. JÄHNE 1,996,206

DEVICE FOR WRAPPING CIGARETTES AND SIMILAR ARTICLES

Filed Jan. 6, 1933 2 Sheets-Sheet 2

Fig.5.

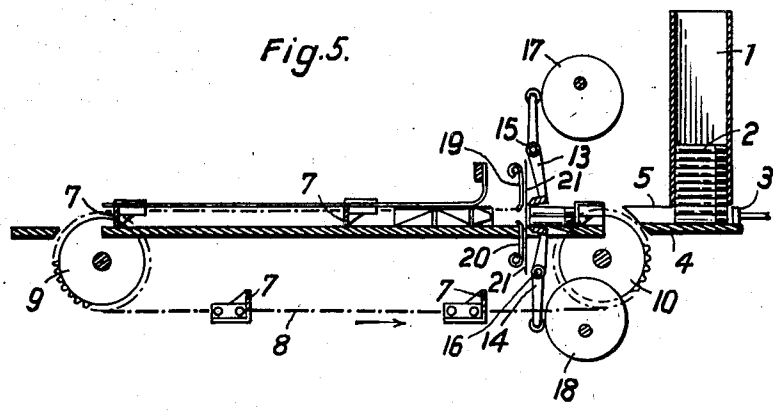

Fig.6.

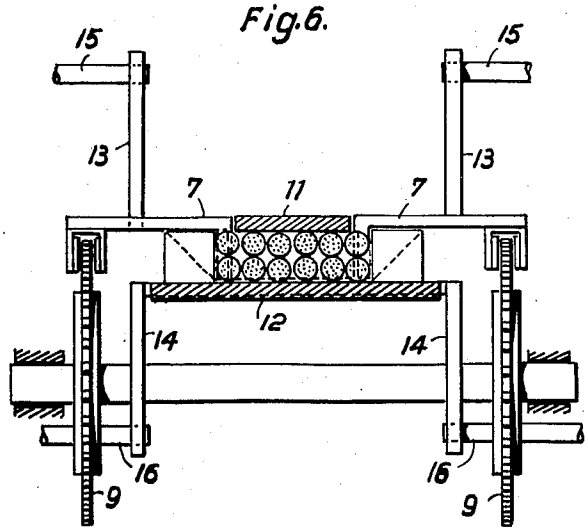

INVENTOR:

Ernst Hermann Jähne

By [illegible]

Attorney.

Patented Apr. 2, 1935 1,996,206

UNITED STATES PATENT OFFICE

1,996,206

DEVICE FOR WRAPPING CIGARETTES AND SIMILAR ARTICLES

Ernst Hermann Jähne, Dresden, Germany, assignor to "Universelle" Cigarettenmaschinen-Fabrik J. C. Muller & Co., Dresden, Germany

Application January 6, 1933, Serial No. 650,573
In Germany January 7, 1932

2 Claims. (Cl. 93—2)

The invention relates to a device for wrapping cigarettes and similar articles with a view to forming small packages. It has already been suggested that, in order that continuous feeding of the articles to be packed is rendered possible, the said articles are fed to the device between guiding plates which move together with the articles to be packed, towards the packing material cut to size. In this way a preliminary folding thereof is accomplished and moreover damage to the cigarettes or the wrapping strip itself, due to the rapid striking of the articles to be packed against the wrapping strip, is avoided.

The present invention comprises a device in which the walls or plates serving for the preliminary folding are independent of the cigarette feed, each of the said plates being preferably provided with separate driving means. By the fact that the feed of the plates serving for the preliminary folding is independent of the cigarette feed, it is possible to effect the preliminary folding at a much slower rate, since the guide plates make a reciprocating movement and thus idle for a definite time at the ends of the movement. When this movement starts, the plates advance rather slowly so that, leading the cigarettes, they perform the folding operation during their slow movement, which is an additional reason for the strip being prevented from tearing and the cigarettes from being damaged. The fact that the two plates are driven independently of each other by separate means provides the additional advantage, in the case of very sensitive packing material, of avoiding excessive stresses which might likewise cause tearing.

The accompanying drawings show two embodiments of the invention by way of example and represent in—

Fig. 1 a diagrammatical side elevation of the first embodiment,

Fig. 2 a top plan view of Fig. 1,

Fig. 3 a detail of Fig. 1 on an enlarged scale,

Fig. 4 a side elevation of Fig. 3,

Fig. 5 a diagrammatical side elevation of a second embodiment of the invention, and

Fig. 6 a front view thereof on an enlarged scale.

The two embodiments differ from each other merely by the arrangements of the catches conveying the cigarettes which catches are moved by a chain disposed above the path of the cigarettes in the first embodiment and below the path of the cigarettes in the second embodiment.

In either instance, **1** is a cigarette container, preferably funnel-shaped in a manner per se known and which is at its lower end so shaped that the cigarettes are brought into the correct order required for packing. In the example shown two rows of cigarettes are to be packed above each other. The two rows of cigarettes **2** are advanced by a ram **3** and brought on a path on which they are guided below by the table **4** and laterally by the plates **5**, **6**. When on this path the cigarettes are seized by catches each consisting of a plate **7** engaging the cigarettes and fastened on or being integral with two side members **7***a*. These side members are secured to two endless chains **8** running on sprocket wheels **9** and **10**.

In the embodiment shown by Figs. 1 to 3 the catches and the moving chains are arranged above the path of the cigarettes while in the embodiment shown by Figs. 5 and 6 the chains **8** are partly moving below the path of the cigarettes so that in this instance the guiding plate **4** must be correspondingly recessed so as to afford the space required by the passage of the catches.

At the end of the guides **4**, **5** and **6** (Fig. 3) there are provided two plates **11** and **12** the first of which is secured to levers **13** while the second is secured to levers **14**. The said levers are double-armed and swingable about the pins **15** and **16** respectively their movement being effected by the two cams **17** and **18**.

Springs (not shown in the drawings) cause the rollers placed at the ends of the said levers to bear against the said cams. In front of the levers **13** and **14** are placed spring mounted flaps **19** and **20** the inner free ends of which are opposite each other and preferably bent off so as to avoid damaging the cigarettes or the wrapping material.

The material to be used for the package is fed to the device as an endless strip or already cut to size **21**. When the said material is fed as an endless strip from a coil, a cutting device of a type already known for wrapping devices must be provided for cutting the required length from the strip.

The levers **13** and **14** and the plates **11**, **12** secured to the same are so controlled by the cams **17** and **18** that, as soon as the cigarettes advanced by the ram **3** are seized by the catches **7**, the said plates have arrived at a position which leaves the minimum distance between them and the cigarette container. Subsequently the said plates **11** and **12** will move together with the catches and the cigarettes conveyed, the chamfered front edges of the plates being approximately flush with the front end of the cigarettes. Then the cigarettes are moved between the two guiding plates **11** and **12** towards the wrapping strip **21**,

and when the cigarettes continue moving, the same as the said plates, the wrapping strip is, in the manner shown by Fig. 3, forced between the spring-mounted flaps 19 and 20 which do no more occupy the position shown by Figs. 1 and 5 but have been displaced into the position obvious from Fig. 3, so as to fold the strip into the shape of a U. This having been accomplished, the levers 13 and 14 return into their initial position in order to advance the next pile of cigarettes with the next following catch.

The preceding pile of cigarettes are entrained by a catch 7 together with the U-shaped sheet folded around, through a folding appliance. While so moving the small packages are sliding on a path 22, the wrapping sheet being held down by one or several guiding rails 23. Lateral folding appliances 24 fold down the paper flaps laterally projecting, in a way per se known, preferably in such a manner that the side flaps are at first applied to the package and subsequently the top and bottom flaps respectively. By means of any suitable or well-known appliance the packages finished by folding may be taken from the device and further handled.

The levers 13 and 14 should be so controlled that in the embodiment shown by Figs. 1 to 4 at least the top plate 11 and in the embodiment shown by Figs. 5 and 6 at least the lower plate 12 is swung out a suitable distance to permit the free passage of the catch 7.

The embodiment shown by Figs. 5 and 6 as compared with the embodiment shown by Figs. 1 to 4 affords the advantage that the device remains accessible from above on its whole length and that the packages are thus visible on the whole length of their travel in any operative position.

The manner in which the cigarettes are being fed to the catches, in which the wrapping strip is being introduced and in which the strip enclosing the cigarettes like a U is laterally folded down, is optional and is no subject matter of the present invention. However an essential feature consists in the package being directly formed about the cigarettes to be wrapped. The means used to this end, e. g. the guiding of the cigarettes prior to the same being seized by the catches and the control of the guiding plates are susceptible of structural modifications without departing from the scope of the invention. So for instance the cam control may be replaced by a link control, the flaps 19 and 20 may be rigid plates swinging about fulcrum pins and returned by springs into their neutral position rather than elastic leaf springs as shown in the embodiments described.

What I claim as my invention, and desire to secure by Letters Patent, is—

1. A device for wrapping cigarettes and similar articles to form small packages, comprising means for feeding the cigarettes, two guiding plates arranged opposite the flat sides of the cigarettes, means for feeding the wrapping material which is cut to size, and means for moving the guiding plates together with the cigarettes toward the wrapping material to preliminarily fold the wrapping material, the means for feeding the cigarettes and moving the plates being independent of each other and the means for moving the one guiding plate being independent of the means for moving the other guiding plate.

2. A device for wrapping cigarettes and similar articles to form small packages, comprising means for feeding the cigarettes, guiding plates between which the cigarettes are fed, means for feeding a wrapping material which is cut to size, spring flaps, and means for moving the guiding plates together with the cigarettes toward the wrapping material to preliminarily fold the wrapping material, the means for feeding the cigarettes and the means for moving the guiding plates being independent of each other and said guide plates leading the wrapping material between the spring flaps for the purpose of folding down.

ERNST HERMANN JÄHNE