United States Patent [19]

Poprik

[11] **3,765,421**

[45] **Oct. 16, 1973**

[54] **HOLDERS FOR SURGICAL TUBES**

[76] Inventor: **John Poprik,** 1000 Hollywood NE, Warren, Ohio 44483

[22] Filed: **Mar. 10, 1972**

[21] Appl. No.: **233,517**

[52] **U.S. Cl.** ..... **128/349 R,** 128/DIG. 26

[51] **Int. Cl.** **A61m 25/02**

[58] **Field of Search** ..... 128/348, 349 R, 350 R, 128/351, 133, DIG. 26; 2/311, 325; 224/26 224/F, 22

[56] **References Cited**

UNITED STATES PATENTS

3,160,158	12/1964	Rayhart	128/349 R
3,161,199	12/1964	Shaw	128/348
3,509,875	5/1970	Richter	128/78

Primary Examiner—Dalton L. Truluck
Attorney—Michael Williams

[57] **ABSTRACT**

A device for securing a small-diameter surgical tube, such as a catheter tube and the like, to the limb of a human, comprising an elongated fabric strap adapted to be wound like a bandage transversely around the human limb. An elastic strip is secured to one end of the strap and carries one part of a snap fastener which is adapted to engage with a selected one of several complementary snap fastener parts. The strip carries a small loop through which the tube extends.

3 Claims, 4 Drawing Figures

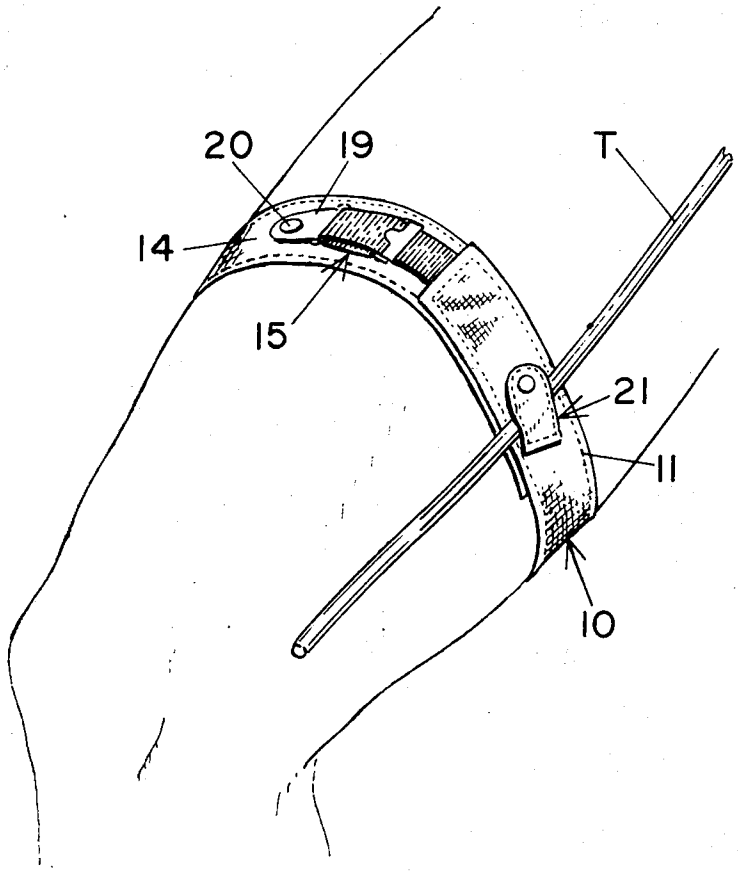

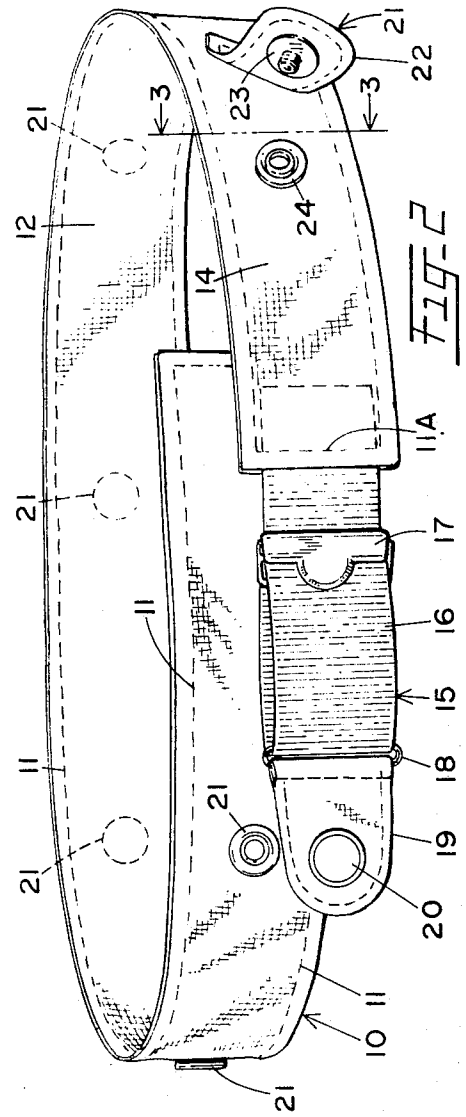

FIG-2

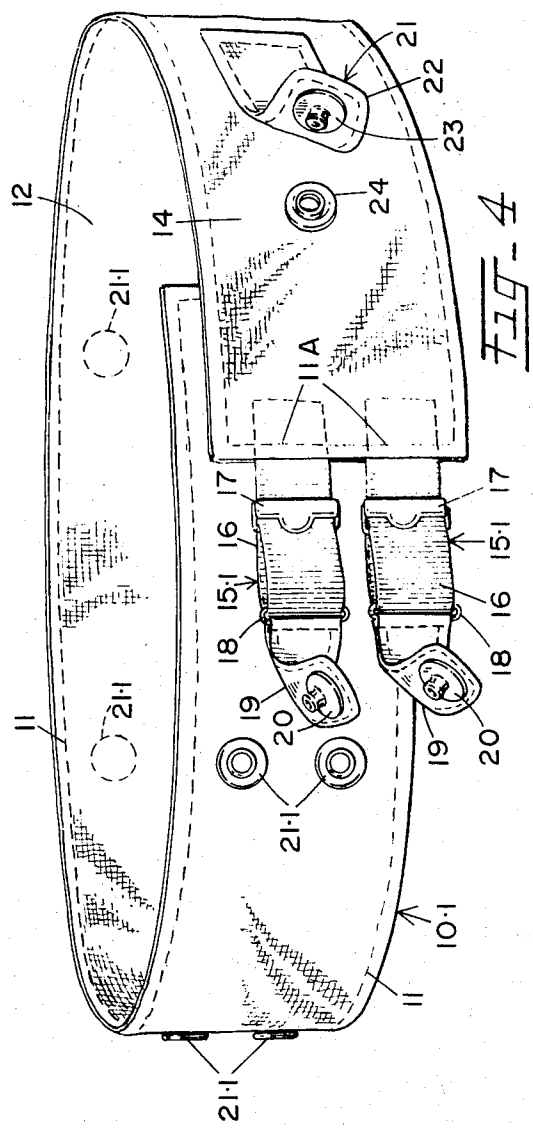

FIG-4

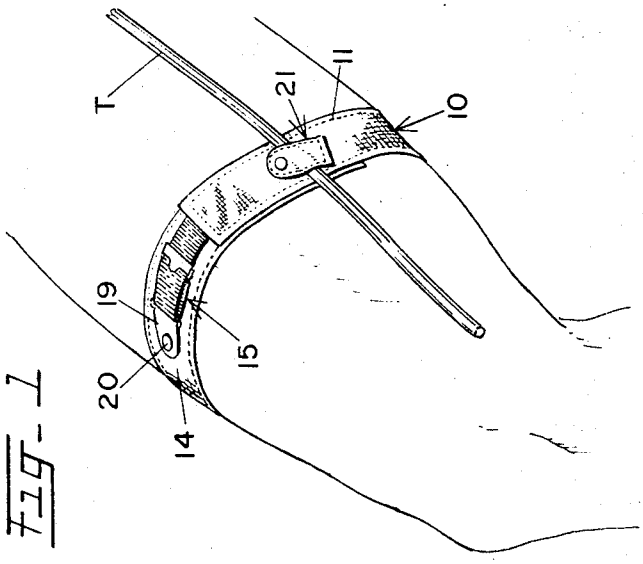

FIG-1

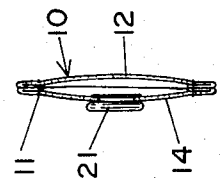

FIG-3

HOLDERS FOR SURGICAL TUBES

BACKGROUND AND SUMMARY

Surgical tubes are widely used to either introduce fluids, into, or drain fluids, from the human system. Such tubes may be used for intravenous feeding or for draining fluids from areas that have required surgery. Catheter tubes for example, are commonly used to drain the human bladder. The matter of holding the tube to a limb has always presented a problem since if the tube is not securely held, considerable discomfort is suffered.

A prior method of securing such tube consisted of taping the tube to the limb, but this is not highly regarded since the tape frequently came loose, or if it did stick, it irritated the skin.

Various other tube holding constructions have been proposed, but none is as simple, and yet as efficient, as the holder of my invention which is as easy to install as a common bandage.

Briefly, my invention provides an elongated fabric strap that is adapted to be wound around the limb of a human, with an elastic strip stitched to one end, the strip having snap-fastener engagement with the strap to provide a bandage-type device of adjustable size. A small loop is connected to the strap to pass the surgical tube and the entire construction is such that nothing but clean, sterilized fabric will be in engagement with the skin of the wearer. The improved holder is made of materials which will withstand washing and sterilization, so that the holder may at all times be maintained in clean, sterile condition.

DESCRIPTION OF THE DRAWING

In the drawing accompanying this description and forming a part of this specification, there are shown, for purpose of illustration, two embodiments which my invention may assume, and in this drawing:

FIG. **1** is a fragmentary perspective view of the leg of a human, showing my improved tube holder in position,

FIG. **2** is an enlarged perspective view of the tube holder, with parts in disconnected relation,

FIG. **3** is a sectional view corresponding generally to the line 3—3 of FIG. **2**, and

FIG. **4** is a view similar to FIG. **2** but showing a slightly different version of the improved tube holder.

DESCRIPTION OF THE PREFERRED EMBODIMENT

As shown in FIGS. **1** through **3**, my improved surgical tube holder comprises an elongated flexible strap **10**, preferably formed of cotton fabric. The strap is formed of two similar lengths which are stitched together at their margins by stitching shown at **11**, to provide an inner length **12** and an outer length **14**.

An elastic strip **15** has one end stitched to an end of the strap **10**, as by stitching **11a**. The strip **15** is formed like a garter support, and includes a loop portion **16** having an adjustment slider **17** to vary the length of the loop. A metal connector **18**, of closed loop shape, connects the elastic loop with a fabric tab **19** to form the opposite end of the strip **15**. One part **20** of a standard snap fastener is connected to the tab **19** and this part is adapted to engage with a selected one of several complementary snap fastener parts **21** carried by the outer length **14** of the strap **10**.

Thus, as shown in FIG. **1**, the strap **10** may be wound transversely about the limb of a human to a size to closely receive the latter, and the elastic strap **15** stretched so that its snap fastener part will be in position to engage a complementary snap fastener part on the strap **10**. In use, the elastic strip **15** overlies the strap **10** and all metal parts are held out of engagement with the skin of the user by the inner length of fabric **12**.

A small loop **21** is provided to receive and pass the surgical tube T and in the present embodiment this loop is formed by a small fabric flap **22** which has one end stitched to the outer fabric length **14** and has one part **23** of a standard snap fastener connected to its free end. A complementary part **24** of the snap fastener is connected to the outer fabric length **14**. It will be noted that the flap **22** is connected to the length **14** at a slight angle to the longitudinal axis of the latter, to provide a better grip on the tube T.

DESCRIPTION OF OTHER EMBODIMENT

In some instances, a wider bandage is preferred, particularly where there is considerable flexing of the muscles of the limb, in order to more firmly secure the tube holder against slipping along the limb, and the construction of FIG. **4** is designed for this purpose. However, the concept is identical to that shown in FIGS. **1** through **3**, except that the flexible strap **10.1** is wider than the strap **10**, and two elastic strips **15.1** are provided for cooperation with a double row of snap fastener parts **21.1**.

I claim:

1. A device for securing a surgical tube to a body member comprising:

a strap of flexible material to be wound around the member, said strap including inner and outer strip lengths secured together to form a double layered construction,

an elastic strip connected to and extending from one end of said strap and carrying a snap fastener portion thereon,

a plurality of complementary snap fastener portions on said strap in spaced relation along its length inwardly of the other end thereof thereby to accommodate body members of varying sizes,

said plurality of fastener portions being affixed to said outer strip length only of said strap and in overlying relation to said inner strap length, thereby preventing contact thereof with said body member, and, **20**

a fabric flap affixed to said strap exteriorly thereof defining a loop providing an opening to receive and support a surgical tube, said flap being affixed to said strap at a slight angle to the longitudinal axis thereof, thereby to afford a better grip on said surgical tube.

2. The device of claim **1** wherein said fabric flap has one end stitched to said outer strap lngth at an angle thereto and having a snap fastener portion at its other end, and said outer strap length has a complementary snap fastener portion therefor in overlying relation to said inner strap length.

3. The device of claim **1** wherein said elastic strip is looped and is provided with an adjustment slider to vary the loop length, with said snap fastener portion slidable within said loop, and,

said plurality of complementary snap fastener portions are spaced inwardly from said other strap end a distance sufficient to cause said slider to overlie said strap outer strip length when said snap fastener portions are engaged.

* * * * *