US 20140003058A1

(19) United States

(12) Patent Application Publication

Long

(10) Pub. No.: US 2014/0003058 A1

(43) Pub. Date: Jan. 2, 2014

(54) **LED LAMP**

(71) Applicants: **BYD Company Limited**, Shenzhen (CN); **Shenzhen BYD Auto R&D Company Limited**, Shenzhen (CN)

(72) Inventor: **Feihong Long**, Shenzhen (CN)

(21) Appl. No.: **13/930,491**

(22) Filed: **Jun. 28, 2013**

(30) **Foreign Application Priority Data**

Jun. 28, 2012 (CN) 201220305850.9

Publication Classification

(51) **Int. Cl.**
F21V 5/04 (2006.01)

(52) **U.S. Cl.**
CPC *F21V 5/04* (2013.01)
USPC **362/294**

(57) **ABSTRACT**

An LED lamp is provided. The LED lamp includes a heat radiation member having a cavity therein; an LED module disposed in the cavity; a mounting frame disposed in the cavity and being above the LED module; and a lens mounted on the mounting frame.

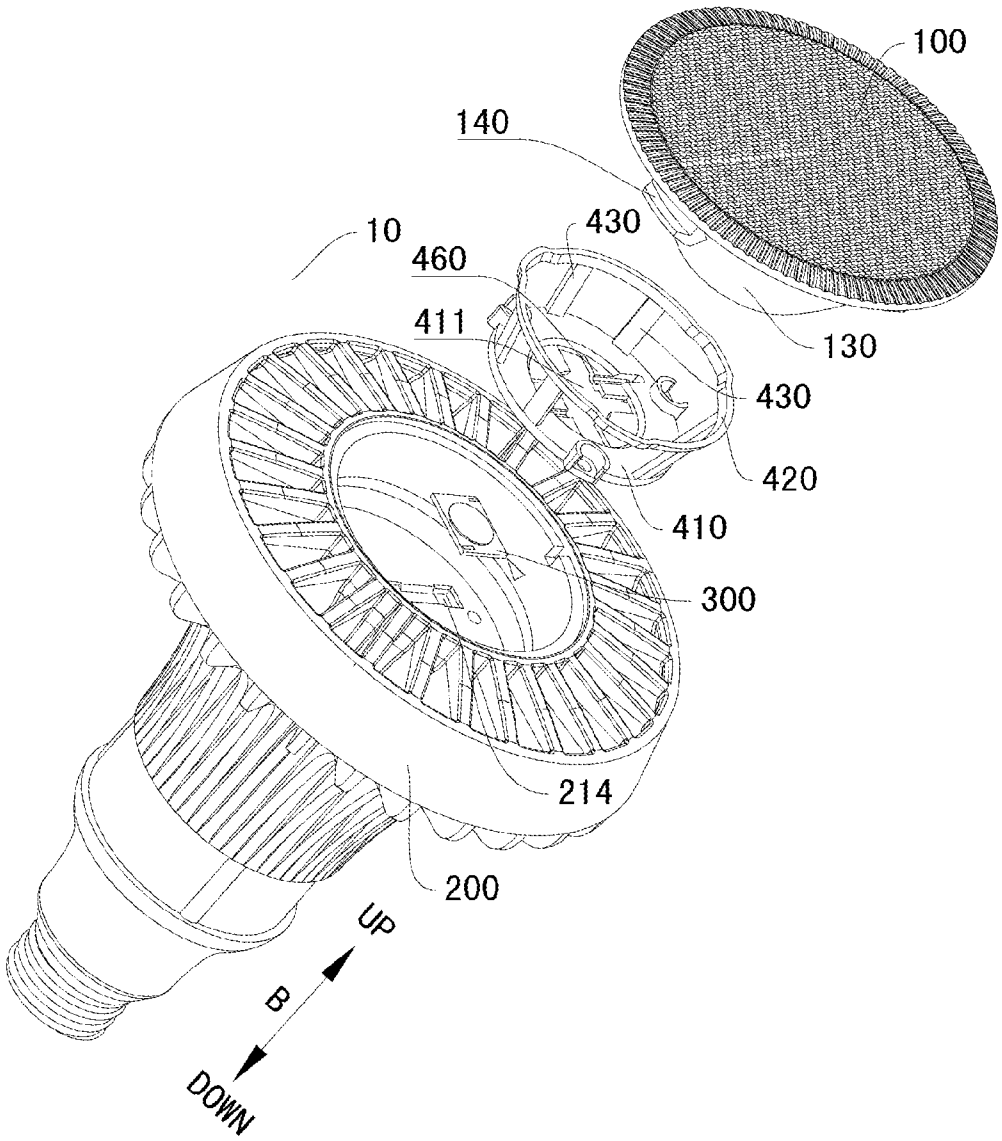

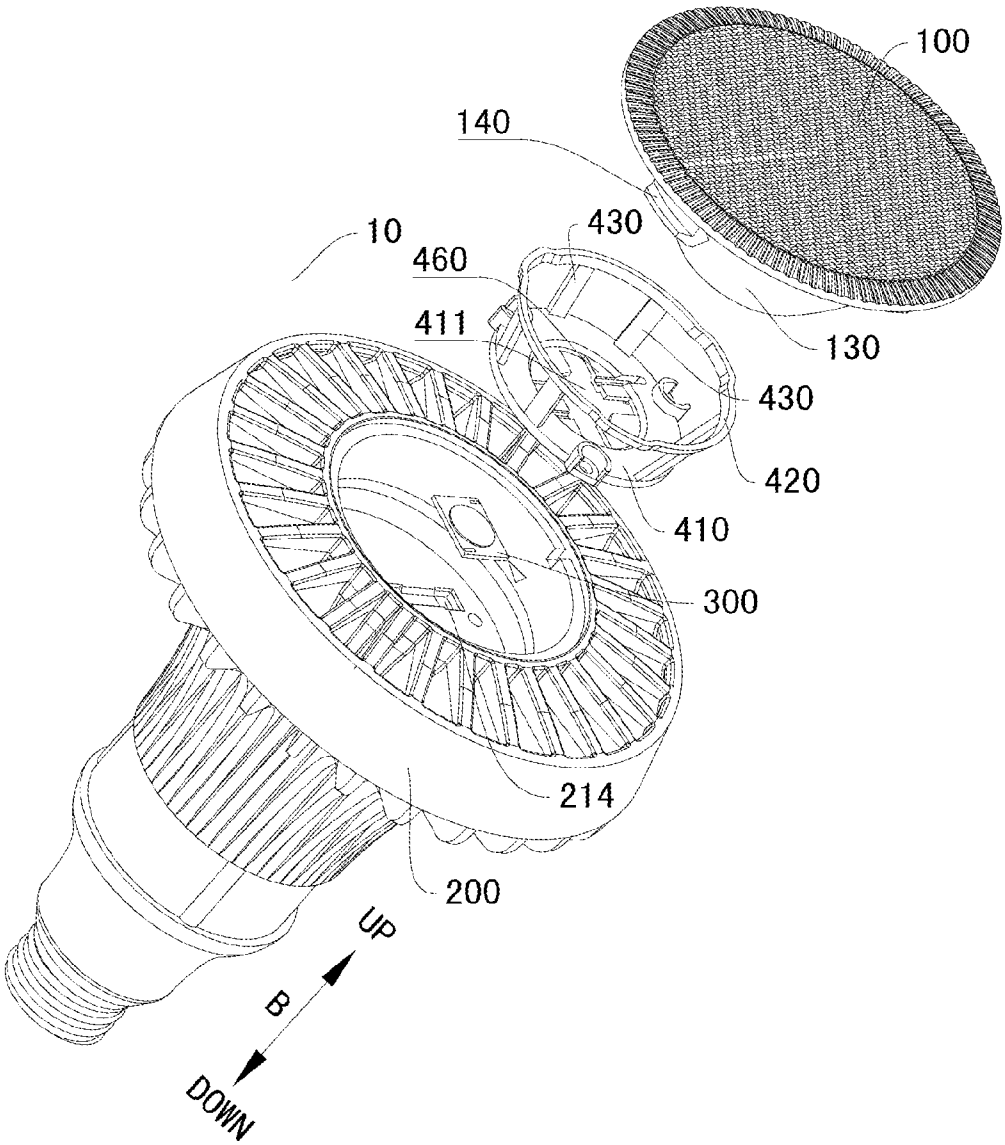

Fig. 1

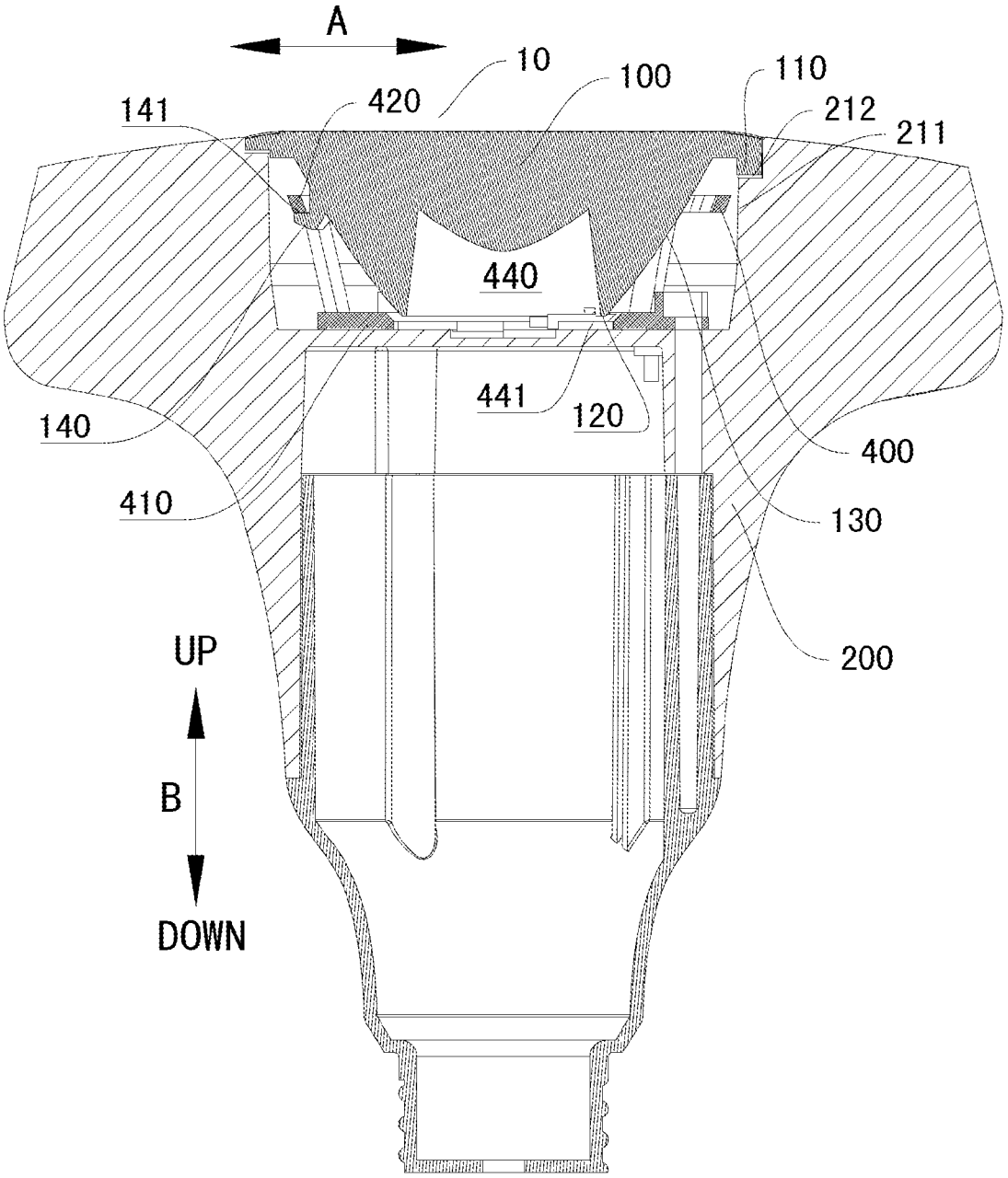
A
10
100
110
141
420
212
211
440
441
120
140
400
410
130
200
UP
B
DOWN

Fig. 2

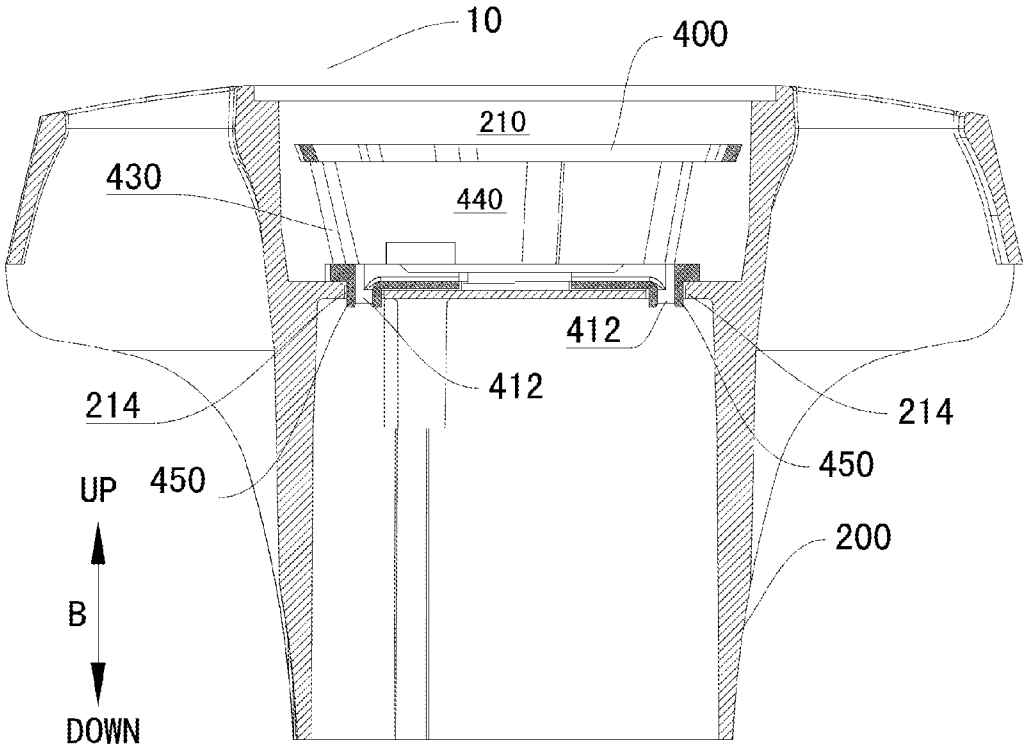

Fig. 3

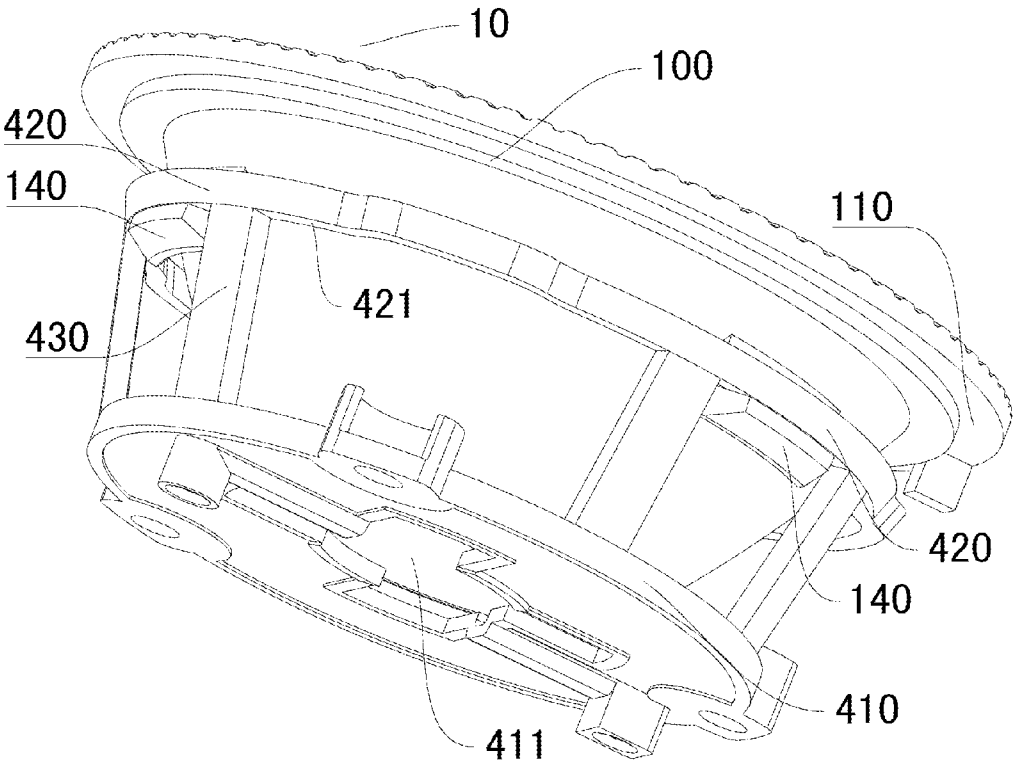

Fig. 4

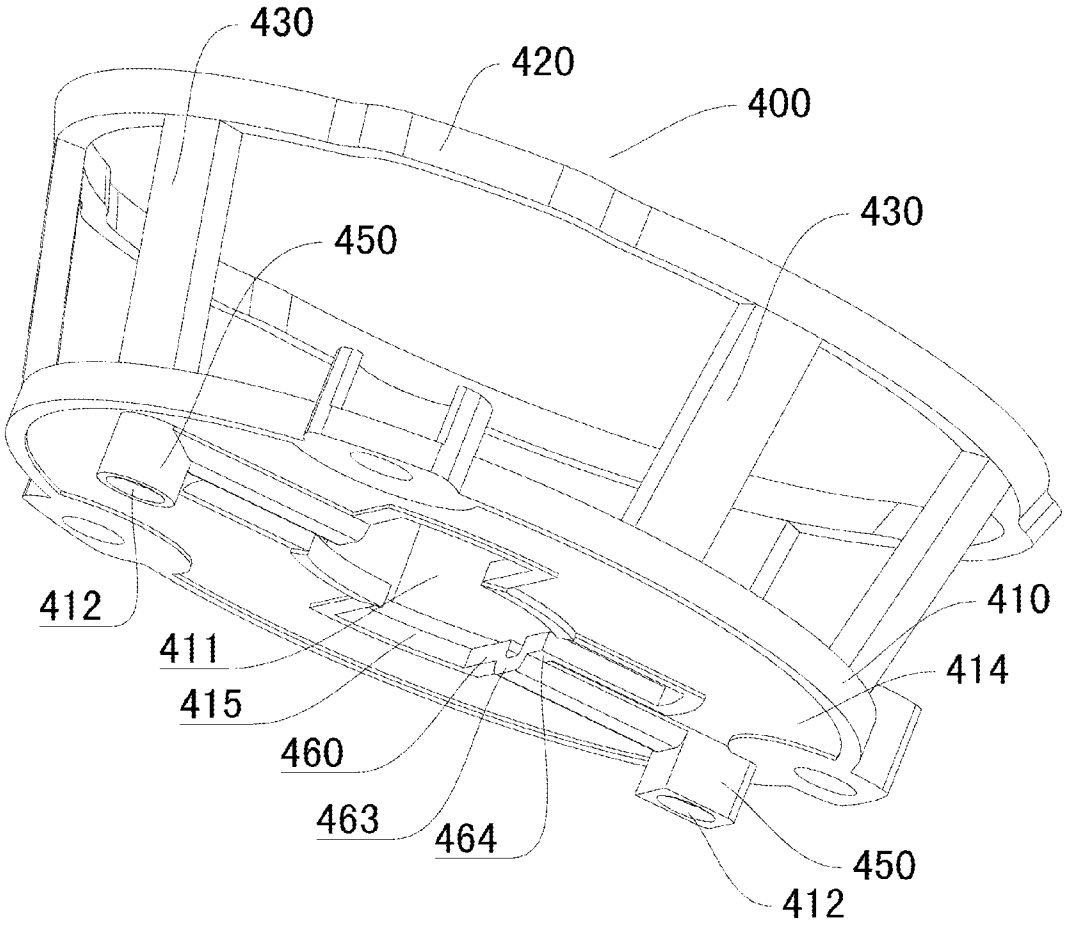

Fig. 5

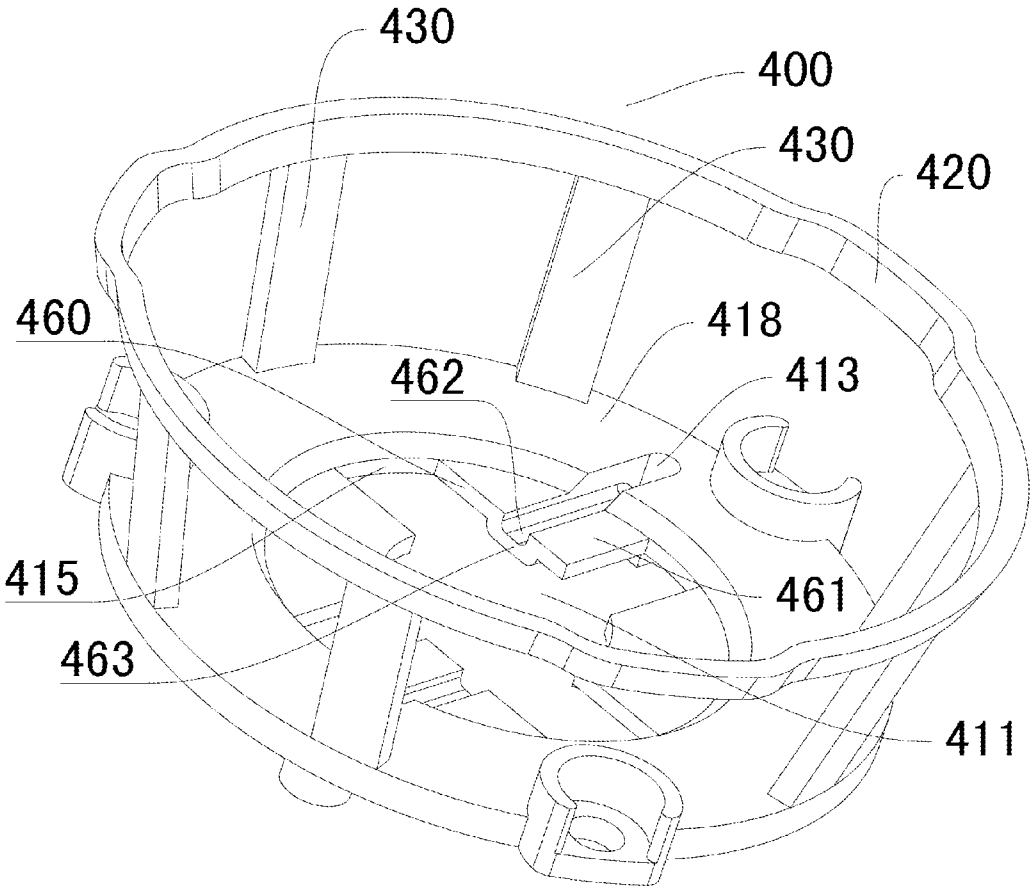

Fig. 6

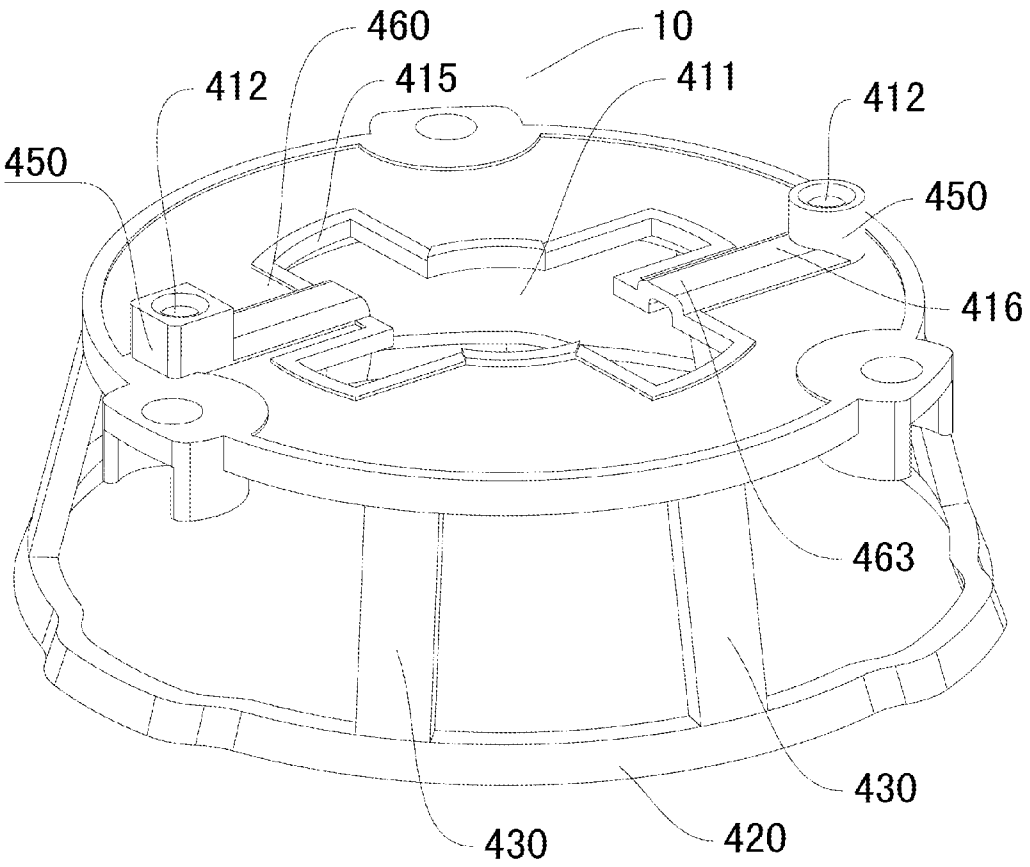

Fig. 7

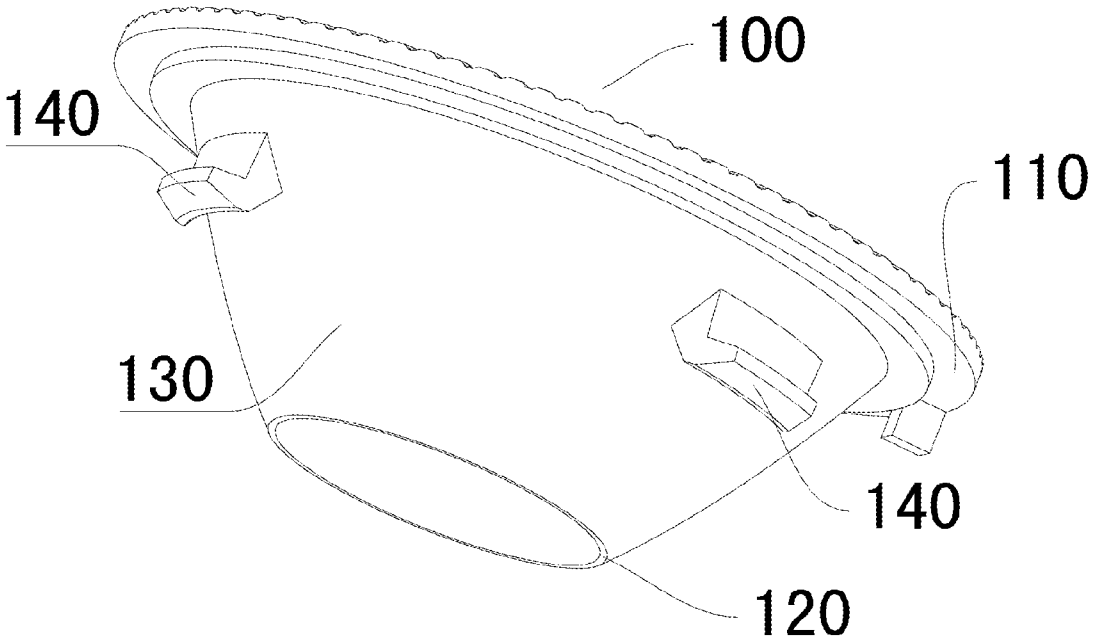

Fig. 8

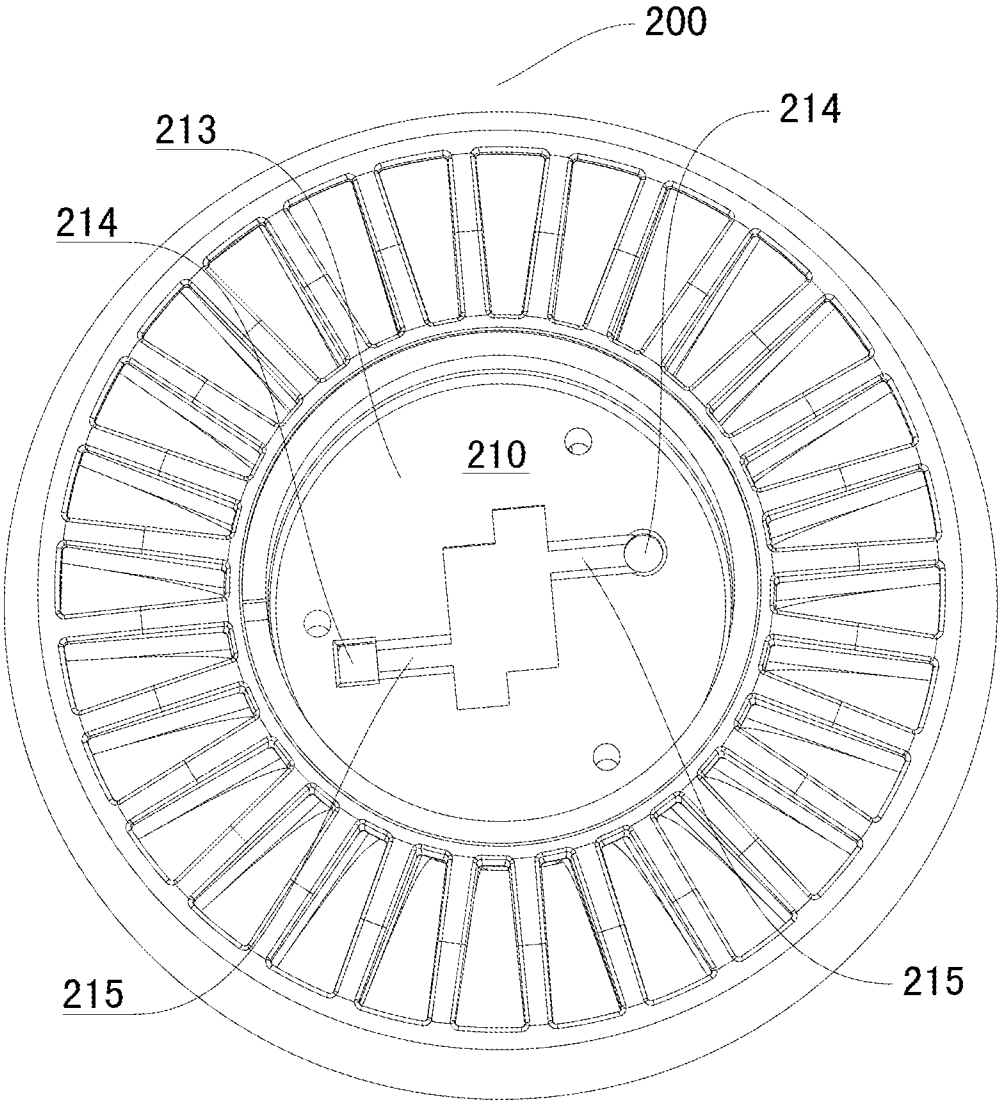

Fig. 9

LED LAMP

CROSS-REFERENCE TO RELATED APPLICATIONS

[0001] This application claims priority and benefits of the following applications:

[0002] 1) Chinese Patent Application No. 201210486113.8 filed with State Intellectual Property Office, P. R. C. on Nov. 26, 2012; and

[0003] 2) Chinese Patent Application No. 201220305850.9 filed with State Intellectual Property Office, P. R. C. on Jun. 28, 2012.

[0004] The entire contents of the above applications are incorporated herein by reference.

FIELD

[0005] Embodiments of the present disclosure generally relate to an LED lamp.

BACKGROUND

[0006] A lens of a conventional LED lamp is mounted on a heat radiation member. The lens is a plastic member, and the heat radiation member is made of metal. Because the deformation of the heat radiation member is very small, a deformation of a hook of the lens should be large so as to mount the lens on the heat radiation member. If a thickness of the hook of the lens is large, the deformation of the hook of the lens will be small. If the thickness of the hook of the lens is small, the hook of the lens will be broken when the lens is mounted. Moreover, because a thickness of a body of the lens is large, the hook of the lens shall have a predetermined thickness so as to meet requirements of injection molding. Thus, the lens of the conventional LED lamp is difficult to mount.

SUMMARY

[0007] Embodiments of the present disclosure provide an LED lamp, comprising a heat radiation member having a cavity therein; an LED module disposed in the cavity; a mounting frame disposed in the cavity and being above the LED module; and a lens mounted on the mounting frame.

[0008] With the LED lamp according to embodiments of the present disclosure, the mounting frame is disposed in the cavity and the lens is mounted on the mounting frame, so that the lens is mounted on the heat radiation member by means of the mounting frame. Therefore, the lens is prevented from deformation and damage caused by direct mounting of the lens on the heat radiation member, and the difficulty of mounting the lens can be reduced. Therefore, The LED lamp according to embodiments of the present disclosure can be easier to assemble and has long service life.

BRIEF DESCRIPTION OF THE DRAWINGS

[0009] FIG. **1** is an exploded view of an LED lamp according to an embodiment of the present disclosure;

[0010] FIG. **2** is a sectional view of an LED lamp according to an embodiment of the present disclosure;

[0011] FIG. **3** is a partial sectional view of an LED lamp according to an embodiment of the present disclosure;

[0012] FIG. **4** is a partial perspective view of an LED lamp according to an embodiment of the present disclosure;

[0013] FIG. **5** is a schematic perspective view of a mounting frame of an LED lamp according to an embodiment of the present disclosure;

[0014] FIG. **6** is a schematic perspective view of a mounting frame of an LED lamp according to an embodiment of the present disclosure;

[0015] FIG. **7** is a schematic perspective view of a mounting frame of an LED lamp according to an embodiment of the present disclosure; and

[0016] FIG. **8** is a schematic perspective view of a lens of an LED lamp according to an embodiment of the present disclosure;

[0017] FIG. **9** is a schematic perspective view of a heat radiation member of an LED lamp according to an embodiment of the present disclosure.

DETAILED DESCRIPTION

[0018] Referring to the drawings, embodiments of the present disclosure will be described by way of example only.

[0019] Unless specified or limited otherwise, terms concerning attachments, coupling and the like, such as "mounted," "connected," "supported," and "coupled" and variations thereof are used broadly and encompass both direct and indirect mountings, connections, supports, and couplers. Further, "connected" and "coupled" are not restricted to physical or mechanical connections or couplers.

[0020] In the specification, relative terms such as "central", "longitudinal", "lateral", "front", "rear", "right", "left", "lower", "upper", "horizontal", "vertical", "above", "below", "up", "top", "bottom" as well as derivative thereof (e.g., "horizontally", "downwardly", "upwardly", etc.) should be construed to refer to the orientation as then described or as shown in the drawings under discussion. These relative terms are for convenience of description and do not require that the present disclosure be constructed or operated in a particular orientation.

[0021] The LED lamp **10** according to embodiments of the present disclosure will be described below with reference to FIGS. **1** to **9**. As shown in FIGS. **1** to **9**, the LED lamp **10** according to embodiments of the present disclosure comprises a heat radiation member **200**, an LED module **300**, a mounting frame **400** and a lens **100**.

[0022] The heat radiation member **200** has a cavity **210** therein, and the LED module **300** is disposed in the cavity **210**. The mounting frame **400** is disposed in the cavity **210** and the mounting frame **400** is above the LED module **300**. The lens **100** is mounted on the mounting frame **400**.

[0023] With the LED lamp **10** according to embodiments of the present disclosure, the mounting frame **400** is disposed in the cavity **210** and the lens **100** is mounted on the mounting frame **400**, so that the lens **100** is mounted on the heat radiation member **200** by means of the mounting frame **400**. Therefore, the lens **100** is prevented from deformation and damage caused by direct mounting of the lens **100** on the heat radiation member **200**, and the difficulty of mounting the lens **100** can be reduced. Therefore, The LED lamp **10** according to embodiments of the present disclosure can be easier to assemble and has long service life.

[0024] As shown in FIGS. **2** to **4**, in some embodiments, the mounting frame **400** has a mounting cavity **440** therein, and the lens **100** is mounted in the mounting cavity **440**. Thus, the lens **100** is more firmly mounted on the mounting frame **400**.

[0025] In some embodiments, a hook **140** for catching the mounting frame **400** so as to mount the lens **100** on the

mounting frame **400**, is disposed on an outer circumferential surface **130** of the lens **100**. Thus, the lens **100** can be more easily and firmly mounted on the mounting frame **400**.

[0026] As shown in FIGS. **1** and **3** to **7**, in some embodiments, the mounting frame **400** comprises an upper ring **420**, a bottom plate **410** and a plurality of connection rods **430**. The bottom plate **410** has a through slot **411** penetrated therethrough along an up and down direction. Each connection rod **430** has an upper end connected with the upper ring **420** and a lower end connected with the bottom plate **410**, the plurality of connection rods **430** are spaced apart from each other along a circumferential direction of the mounting frame **400**, and the hook **140** is inserted between adjacent connection rods **430** so as to catch the upper ring **420**. Thus, a structure of the mounting frame **400** is simple and reasonable and so on. Moreover, the lens **100** can be more expediently, fleetly, firmly and detachably mounted on the mounting frame **400**.

[0027] In some embodiments, the mounting frame **400** is substantially configured as a hollow bowl. The bottom plate **410** is mounted on the bottom wall **213** of the cavity **210** via a bolt.

[0028] The number of the connection rods **430** is six. A hook groove is formed between adjacent connection rods **430** and the upper ring **420**, and the hook **140** catches the hook groove. Advantageously, the hook **140** is V-shaped. Thus, the hook **140** can catch the upper ring **420** more firmly.

[0029] As shown in FIG. **8**, a plurality of the hooks **140** are provided and are evenly spaced apart from each other along a circumferential direction of the lens **100**. Thus, the lens **100** is more firmly mounted on the mounting frame **400**.

[0030] In some embodiments, the hook **140** is integrally formed with the lens **100**, thus reducing the manufacturing cost of the LED lamp **10**. The plurality of the connection rods **430**, the upper ring **420** and the bottom plate **410** are integrally formed from a plastic material, thus enhancing the structural strength of the mounting frame **400** and reducing the manufacturing cost of the mounting frame **400**.

[0031] In some embodiments, the hook **140** abuts against each of the adjacent connection rods **430**. Thus, the adjacent connection rods **430** can clamp the hook **140** tightly, so that the lens **100** is more firmly mounted on the mounting frame **400**.

[0032] The hook **140** catches a lower surface **421** of the upper ring **420**. A contact surface **141** of the hook **140** contacting the lower surface **421** of the upper ring **420**, a bottom surface **120** of the lens **100** and the bottom plate **410** are parallel with one another. Thus, the lens **100** is more firmly mounted on the mounting frame **400**.

[0033] As shown in FIG. **2**, in some embodiments, a bottom surface **120** of the lens **100** is spaced apart from a bottom wall **441** of the mounting cavity **440** by a predetermined distance. Thus, there is larger space between the mounting frame **400** and the lens **100**, thus preventing a wire of the LED module **300** from being pressed by the lens **100**. Moreover, even if the lens **100** is not mounted in place, the lens **100** can be moved downwards so as to mount the lens **100** on the mounting frame **400**.

[0034] In some embodiments, as shown in FIGS. **2-4**, a groove **212** is formed in a circumferential wall **211** of a top end of the cavity **210**, an upper end of the lens **100** is upwardly extended out of the mounting cavity **440**, and an outer circumferential edge of the upper end of the lens **100** is fitted in the groove **212**. Thus, the lens **100** is more firmly mounted. Moreover, even if the lens **100** is not mounted in place, the lens **100** can be moved downwards by increasing the depth of the groove **212** so as to mount the lens **100** on the mounting frame **400**.

[0035] As shown in FIG. **2**, in some embodiments, the upper end of the lens **100** has a flange **110** extended along a radial direction and fitted in the groove **212**. Thus, the lens **100** is more firmly mounted. The radial direction is shown by an arrow A in FIG. **2**.

[0036] As shown in FIGS. **3** and **9**, a first wire hole **214** is formed in the bottom wall **213** of the cavity **210** and penetrated therethrough in an up and down direction. A second wire hole **412** is formed in the bottom plate **410**, penetrated therethrough in the up and down direction and corresponded to the first wire hole **214**. A first wire groove **413** is formed in an upper surface **418** of the bottom plate **410** and has an end communicated with the second wire hole **412**. The up and down direction is shown by an arrow B in FIGS. **1** to **3**.

[0037] The heat radiation member **200** is usually made of a metal such as an aluminum alloy, so as to facilitate to heat radiation. The most part of the wire is prevented from contacting with the heat radiation member **200** by forming the second wire hole **412** corresponded to the first wire hole **214** and the first wire groove **413** communicated with the second wire hole **412** in the bottom plate **410**. Thus, a scarfskin of the wire is prevented from deformation and accelerated aging, and therefore the short circuit caused by the desquamation of the scarfskin of the wire can be avoided, thus improving the service life and security of the LED lamp **10**.

[0038] In some embodiments, as shown in FIGS. **3** to **5**, a column **450** is disposed on a lower surface **414** of the bottom plate **410** and fitted within the first wire hole **214**, and the second wire hole **412** is penetrated through the column **450**. Thus, the most part of the wire is prevented from contacting with the heat radiation member **200**, thus improving the service life and security of the LED lamp **10**.

[0039] As shown in FIGS. **1**, **5** to **7**, in some embodiments, a wire passing extension **460** is disposed on an inner wall **415** of the bottom plate **410** and extended towards a center of the bottom plate **410**. A second wire groove **462** is formed in an upper surface **461** of the wire passing extension **460** and communicated with the first wire groove **413**. Thus, the entire wire is prevented from contacting with the heat radiation member **200**, thus further improving the service life and security of the LED lamp **10**.

[0040] In some embodiments, as shown in FIGS. **3** to **5**, **9**, a holding groove **215** is formed in the bottom wall **213** of the cavity **210**.

[0041] A portion of the bottom plate **410** is recessed downwardly with respect to a remaining portion of the bottom plate **410** so as to form a first boss **416** on a lower surface **414** of the bottom plate **410** and to form the first wire groove **413**. A portion of the wire passing extension **460** is recessed downwardly with respect to a remaining portion of the wire passing extension **460** so as to form a second boss **463** on a lower surface **464** of the wire passing extension **460** and to form the second wire groove **462**.

[0042] The first boss **416** and the second boss **463** are received in the holding groove **215**. Thus, a thickness of the bottom plate **410** and a thickness of the wire passing extension **460** are not changed, thus improving the structural strength of the mounting frame **400**.

[0043] Reference throughout this specification to "an embodiment," "some embodiments," "one embodiment", "another example," "an example," "a specific examples," or

"some examples," means that a particular feature, structure, material, or characteristic described in connection with the embodiment or example is included in at least one embodiment or example of the present disclosure. Thus, the appearances of the phrases such as "in some embodiments," "in one embodiment", "in an embodiment", "in another example, "in an example," "in a specific examples," or "in some examples," in various places throughout this specification are not necessarily referring to the same embodiment or example of the present disclosure. Furthermore, the particular features, structures, materials, or characteristics may be combined in any suitable manner in one or more embodiments or examples.

[0044] Although explanatory embodiments have been shown and described, it would be appreciated by those skilled in the art that the above embodiments can not be construed to limit the present disclosure, and changes, alternatives, and modifications can be made in the embodiments without departing from spirit, principles and scope of the present disclosure.

What is claimed is:

1. An LED lamp, comprising:

a heat radiation member defining a cavity therein;

an LED module disposed in the cavity;

a mounting frame disposed in the cavity and being above the LED module; and

a lens mounted on the mounting frame.

2. The LED lamp as set forth in claim **1**, wherein the mounting frame has a mounting cavity therein, and the lens is mounted in the mounting cavity.

3. The LED lamp as set forth in claim **2**, wherein a bottom surface of the lens is spaced apart from a bottom wall of the mounting cavity by a predetermined distance.

4. The LED lamp as set forth in claim **2**, wherein a groove is formed in a circumferential wall of a top end of the cavity, an upper end of the lens is upwardly extended out of the mounting cavity, and an outer circumferential edge of the upper end of the lens is fitted in the groove.

5. The LED lamp as set forth in claim **4**, wherein the upper end of the lens has a flange extended along a radial direction and fitted in the groove.

6. The LED lamp as set forth in claim **1**, wherein a hook for catching the mounting frame so as to mount the lens on the mounting frame, is disposed on an outer circumferential surface of the lens.

7. The LED lamp as set forth in claim **6**, wherein the hook is V-shaped.

8. The LED lamp as set forth in claim **6**, wherein a plurality of the hooks are provided and evenly spaced apart from each other along a circumferential direction of the lens.

9. The LED lamp as set forth in claim **6**, wherein the hook and the lens are integral with each other.

10. The LED lamp as set forth in claim **6**, wherein the mounting frame comprises:

an upper ring;

a bottom plate having a through slot penetrated therethrough along an up and down direction; and

a plurality of connection rods each defining an upper end connected with the upper ring and a lower end connected with the bottom plate, the plurality of connection rods being spaced apart from each other along a circumferential direction of the mounting frame, and the hook is inserted between adjacent connection rods so as to catch the upper ring.

11. The LED lamp as set forth in claim **10**, wherein the hook abuts against each of the adjacent connection rods.

12. The LED lamp as set forth in claim **10**, wherein the hook catches a lower surface of the upper ring,

wherein a contact surface of the hook contacting the lower surface of the upper ring, a bottom surface of the lens and the bottom plate are parallel with one another.

13. The LED lamp as set forth in claim **10**, wherein the plurality of the connection rods, the upper ring and the bottom plate are integrally formed from a plastic material.

14. The LED lamp as set forth in claim **10**, wherein a bottom wall of the cavity has a first wire hole penetrated therethrough in the up and down direction,

wherein the bottom plate has a second wire hole penetrated therethrough in the up and down direction and is corresponded to the first wire hole,

wherein a first wire groove is formed in an upper surface of the bottom plate communicated with the second wire hole.

15. The LED lamp as set forth in claim **14**, wherein a column is disposed on a lower surface of the bottom plate and fitted within the first wire hole, and the second wire hole is penetrated through the column

16. The LED lamp as set forth in claim **14**, wherein a wire passing extension is disposed on an inner wall of the through slot and extended towards a center of through slot,

wherein a second wire groove is formed in an upper surface of the wire passing extension and communicated with the first wire groove.

17. The LED lamp as set forth in claim **16**, wherein a holding groove is formed in the bottom wall of the cavity,

a portion of the bottom plate is recessed downwardly with respect to a remaining portion of the bottom plate so as to form a first boss on a lower surface of the bottom plate and to form the first wire groove,

a portion of the wire passing extension is recessed downwardly with respect to a remaining portion of the wire passing extension so as to form a second boss on a lower surface of the wire passing extension and to form the second wire groove,

wherein the first boss and the second boss are received in the holding groove.

* * * * *