March 11, 1969 K. J. REED ETAL 3,432,376

DRY TRANSFER SHEETS AND PROCESSES FOR USING THE SAME

Filed Jan. 28, 1964

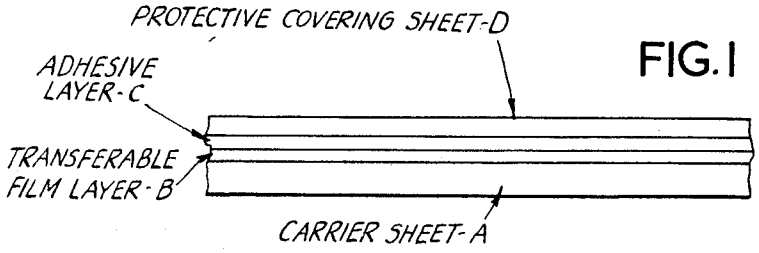

FIG. 1

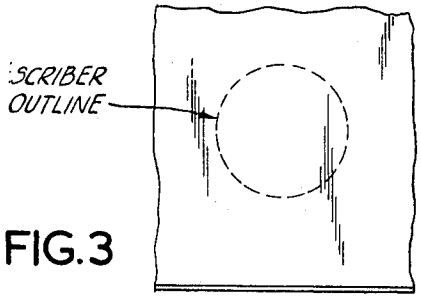

FIG. 3

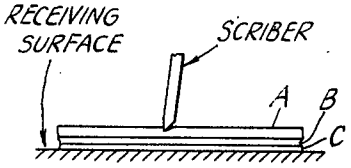

FIG. 2

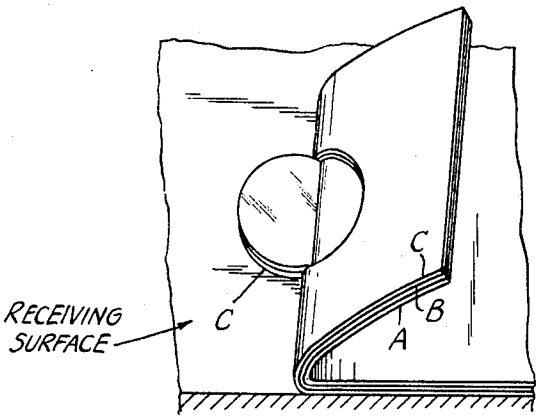

FIG. 4

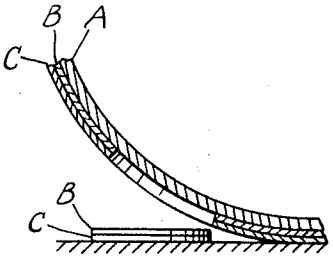

FIG. 5

United States Patent Office

3,432,376

Patented Mar. 11, 1969

1

3,432,376
DRY TRANSFER SHEETS AND PROCESSES FOR USING THE SAME

Kenneth James Reed and Alan Lennox Lythgoe, London, England, assignors to Letraset Limited, London, England, a British company

Filed Jan. 28, 1964, Ser. No. 340,815
Claims priority, application Great Britain, Feb. 26, 1963, 7,763/63
U.S. Cl. 156—234 11 Claims
Int. Cl. B44d *1/20, 5/04, 5/02*

This invention relates to dry transfer sheets and to processes for using the same.

The term "dry transfer" is used to mean a transfer which does not require the assistance of water or any other liquid to effect or facilitate the transfer. Dry transfer materials are known which consist essentially of a carrier sheet, indicia (which it is desired to transfer) carried by the said sheet and adhesive applied at least over the area of the indicia by means of which the indicia may be caused to adhere to a receiving surface and released from the carrier sheet, thus effecting the required transfer.

It is an object of the present invention to provide a new form of transfer sheet which is adapted to enable the transfer to a receiving surface of an area of a transferable film selected entirely at the will of the user. The new material, as described later herein has manifold uses rendering it a product of considerable versatility.

The present invention is illustrated in the annexed drawing, in which:

FIG. 1 is an edge-wise view of a preferred form of the invention;

FIG. 2 is a diagrammatic view showing the sheet of the invention applied to a receiving surface and with a scriber in operative relation to the sheet;

FIG. 3 shows a plan view of a sheet according to the invention, positioned over an outline of an area to be transferred;

FIG. 4 shows a perspective view of a sheet according to the invention, on a receiving surface and after scribing, the carrier being partially peeled away; and

FIG. 5 shows an elevation cross-sectional view as in FIG. 4.

According to the present invention there is provided a transfer sheet which comprises essentially a carrier sheet A, a thin transferable film layer B carried by said carrier sheet and being substantially or completely coextensive in area with the carrier sheet, an adhesive layer C carried by said film layer and a separble protective covering sheet D applied on said adhesive layer. In a preferred form of the invention the assembly of layers A, B, and C is such that a line scribed on the face of the carrier sheet A remote from the film layer B, as illustrated in FIG. 2, will cause the fracture of the layer B in register with that line even though the sheet A is not itself cut through by such scribing action. The preferred products are referred to herein, for convenience, as "scribable" products. Specific methods whereby the said result may be achieved are described later herein.

It is to be understood that the transfer sheet of the present invention, as distinguished from the types of transfer material which have been described in the prior art, is not one which relies on the presence of pre-formed indicia; except in specific cases where indicia may additionally be present, the transfer sheets of the invention embody as the transferable element a film layer which extends substantially over the area of the carrier sheet, usually as a wholly uniform layer. It may be exactly coextensive with the carrier sheet or it may in practice be convenient, for ease of handling, to leave a margin of the carrier sheet not covered by the transferable film layer.

2

The basic utility of the new transfer sheet of the present invention is that any area of the transferable film layer, i.e. of any shape or size within the dimensions of that layer, may be selected, cut and transferred to a receiving surface, free from the carrier sheet. Thus if the transferable film layer is coloured the material affords a method of applying to a receiving surface coloured areas of any desired shape.

It is of course possible to cut out a desired shape from a dry transfer sheet according to the present invention, remove the protective sheet (if it has not already been removed prior to cutting) apply the adhesive layer surface to the receiving surface, apply pressure and pull away the carrier sheet. This is termed a cut-out process of transfer. However, the scribable dry transfer sheets according to the invention, may be used without cutting through the carrier sheet and are thus frequently more convenient in practice. In this manner of use of the transfer sheet, the protective sheet is removed, and the transfer material is placed, adhesive side down, onto the receiving surface to cover, for example, a closed outline of a design to which the transfer is to be precisely applied, as shown in FIG. 3. At this stage the transfer may be lifted up and placed on another position without premature transfer occurring. A sharp instrument, such as a needle stylus or knife or scribing tool which produces a high and very localised pressure, is then scribed around the outline of the design (as shown in FIG. 2) using firm pressure sufficient temporarily or permanently to score, i.e. groove, the carrier sheet but not to cut it, so that when the carrier sheet is lifted away, as shown in FIGS. 4 and 5, the film will become free from the carrier sheet and adhere precisely to the area within the outline, leaving the carrier sheet intact. To facilitate transfer, particularly of areas of film of intricate shape, additional pressure is applied to the area within the scored outline prior to lifting away the carrier sheet, by means of a number of strokes of a ball point pen or an instrument such as a radiused rod of metal, wood or plastic. An unlimited variety of shapes may thus be transferred from a single transfer sheet containing originally just one continuous transferable film layer, until the layer is consumed. It will be noted that accidental cutting of the receiving surface cannot occur since it is always protected by the un-cut carrier sheet. This scribing process is termed differential cutting.

In order to achieve the results indicated above and at the same time to eliminate the risk of premature transfer of the transferable film when the sheets are stored, transported or subject to normal handling, it is of course necessary to select correctly the degrees of mutual adhesion of the interfaces of the layer and sheets. This mutual adhesion is herein referred to as the "peel bond" since the degree of mutual adhesion can be estimated by the practical test of peeling the materials apart at the said interfaces and determining the force which is necessary to overcome the mutual adhesion.

It is further necessary to provide that although the peel bonds are selected correctly to avoid such premature transfer yet release of the transferable film and its adhesion to a receiving surface, must be readily effected when required.

Accordingly the sheets and layers are preferably selected so that the peel bond of the carrier sheet to the transferable film is higher than the peel bond between the transferable film and the protective sheet in storage and transport, and is also higher than the peel bond between transferable film and the receiving surface under light finger pressure. When transfer is required the action of applying scoring pressure to the carrier sheet, provides a peel bond between the thus cut transfer film and the receiving surface which is higher than the peel bond between the carrier sheet and transferable film. Interpreted

in a different manner the peel bond of the adhesive to the receiving surface under light finger pressure (½ p.s.i. or less) is insufficient to transfer the film, but the adhesive peel bond increases under high pressure and is sufficient to peel the transferable film off the carrier sheet provided also that the transferable film has a cut edge from which peeling can be commenced.

In order to achieve the result just described the adhesive used must have different levels of adhesive power at lower and higher applied pressures. Moreover the property is exhibited towards a wide variety of possible receiving surfaces, e.g., paper, paper-board, plastics, glass, wood or metals. However it must not exhibit more than slight adhesion even under high pressures to the protective sheet which, as noted above is essentially a removable sheet serving only to protect the adhesive layer. A suitable such protective sheet is a silicone-coated paper, the intrinsic characteristics of which are known to be such that adhesives will not readily adhere to it.

Since the adhesive will not adhere to the protective sheet even under high pressures a further and useful method of employing the transfer sheet of the invention is made possible, and is termed pre-scoring. In this method the scoring of the carrier sheet is carried out without removing the protective sheet. Then, because the cut area of transferable film does not adhere to the protective sheet the protective film can be removed, and the adhesive surface then applied to the desired receiving surface; strong finger pressure or a few strokes with a radiused instrument will then cause the pre-cut area to transfer and adhere to the receiving surface and the carrier sheet can be lifted away. This method is of course of advantage where the receiving surface is of such delicacy that the transmission of pressure to it by the scoring operation is to be avoided.

The necessary functional properties of the transfer materials are obtained by selecting the four components, namely carrier sheet, transferable film, adhesive layer and protective sheet according to physical specifications, since the four components must provide a working combination which operates when specified physical forces are applied. The most important physical specifications needed for a preferred form of dry transfer sheet according to the invention are:

Light transmitting properties,
Elongation relationships,
Thickness of carrier sheet,
Tensile strength relationships,
Adhesion relationships,
Surface finish.

These physical attributes will now be discussed individually:

Light transmitting properties.—It is desirable, but not essential, that the carrier sheet, adhesive layer and protective sheet are sufficiently transparent so that receiving surface is visible when the transfer sheet, complete with protective sheet is placed on it, provided of course that the particular transferable layer is also light transmitting.

Elongation.—The functional cutting relationships existing in the transfer assembly in the preferred forms of the invention providing the differential cutting and prescoring processes of transfer, require that the transferable film cuts more easily than the carrier sheet. This may be achieved by selecting a carrier sheet and transferable film layer in which the carrier sheet has a higher elongation at break point than the transferable film. The elongation limits for carrier sheets as determined by ASTM Test Method D-638, and transferable films and specific examples of pairs of materials taken from the examples which follow later herein are as follows:

	Preferred Elongation Limits, Percent	Example			
		1	2	3	4
Carrier sheet	10-700	200	600	30	10
Transferable film	5-100	15	40	10	5

Examples 1 and 2 provide a very large elongation differential which operates very satisfactorily in the differential cutting process under a very wide range of cutting forces i.e. a very wide range of cutting pressures and stylus sharpness values.

Thickness of carrier sheet.—The thickness of the carrier sheet is of significance in the cutting operation. If the sheet is too thick it will require excessive stylus pressure to cut the transferable film. The lower limit of the thickness range is partly set by the practical difficulty of handling very thin and flimsy transfer sheets. Generally a thickness in the range of .005–.008 inch is desirable and a thickness of .002–.003 is most satisfactory.

Tensile strength.—The transferable film should exhibit sufficient strength so that it may be peeled from the carrier sheet in the transfer operation without breaking. A secondary consideration is that it may be removed from the receiving surface to carry out corrections and alterations without breaking. The main functional requirement is met if the tensile strength of the transferable film is adequate and also that there is sufficient flexibility. The latter is equivalent to elongation, which is specified in the cutting requirements above. Generally the tensile strength is measured by the force necessary to break a one inch wide strip of the detached film and the lower limit must exceed the peel bond adhesion value to the carrier sheet to permit ease of transfer. The upper limit is generally set only by practical difficulties in providing strong, thin films, and tensile strength values as in Examples 1–4 provide useable films.

Adhesion relationships.—Adhesion values and their relationships are the most important physical properties in the transfer materials and all the three transfer processes referred to above.

There are five individual adhesion values in the assembly and three important adhesion relationships in the transfer process as follows.

Adhesion Value 1: carrier sheet to transferable film.

Adhesion Value 2: transferable film to adhesive layer.

Adhesion Value 3: adhesive layer to receiving surface at ½ p.s.i.

Adhesion Value 4: adhesive layer to receiving surface at 100 p.s.i.

Adhesion Value 5: protective backing to adhesive layer.

The adhesion values are conveniently measured by a peel bond test under standard conditions in which the pressure is applied by a pad of rubber to provide uniform pressure using a hydraulic press, for example for a duration of 10 seconds at 20° C., a standard receiving surface consisting of matt polyester drawing film being used. Peeling is carried out at right angles at a rate of 1 foot per minute. The desirable peel bond ranges for each of the above adhesion values and the values in the specific examples which follow, are as follows, in grams:

Adhesion Value	Preferred Adhesion Range	Example			
		1	2	3	4
1	1–20 grams	8	5	9	16
2	Irremovable				
3	Less than 15 grams at ½ p.s.i.	3	5	3	1–2
4	20–400 grams at 100 p.s.i.	90	180	90	50
5	0–5 grams at 100 p.s.i	2	2	2	0
Tensile strength of transferable film.	Over 20 grams per inch.				

The adhesion relationships involved in the combination of materials are as follows:

Relationship A: adhesion value 2 should preferably always exceed adhesion value 1 and 4 so that the the transferable layer never parts from the adhesive layer.

Relationship B: adhesion 1 should be greater than adhesion 5 so that premature transfer onto the protective sheet cannot occur.

Relationship C: adhesion 4 should be greater than adhesive value 1 at over 50 p.s.i. (normally tested at 100 p.s.i.).

Surface finish.—The carrier sheet may be selected to have either a high gloss, matt or embossed finish on the side to which the transferable film is applied to provide a transferred film with a replica of the carrier sheet surface. A matt surface finish provides a substantially lower peel bond value than a gloss finish and an embossed film shows higher elongation values than a smooth film. Matt and semi-gloss films are of particular value.

Within the scope of the physical requirements set forth above a wide variety of materials may be employed for the various sheets and layers. Illustrative examples will now be described but it will be appreciated that the invention is not limited to the use of such examples.

CARRIER SHEETS

Carrier sheets may consist of individual sheets which may be flat or reeled, of a self-supporting film of a polymer or copolymer or of a material such as paper or regenerated cellulose or other film or foil, having a surface of such polymer or copolymer. Suitable polymers and copolymers are polysiloxanes, fatty acid chromium complexes supported on paper or regenerated cellulose film; polystyrene; substituted polystyrenes; copolymers or graft polymers of styrene, substituted styrenes and styrene homologues, butadiene and acrylonitrile; polyvinyl-halides, -esters and -acetals; cellulose esters and ethers; polyesters such as polyethyleneglycol terephthalate; polycarbonates and polycarbonateurethane complexes; rubber hydrochloride; polyolefins, including polyethylene of high and low density and polypropylene; and polyamides. Any of the above polymer films may contain plasticisers to provide the correct elongation properties and stabilisers and fillers. Preferred carrier sheet polymers are unsupported, unplasticised, unfilled films of polyethylene of all the available density values, and polypropylene, both prepared by, for example, blown tubular film methods or chill, roll casting methods, and extruded, calendered or cast polystyrene, or copolymer containing a major proportion of polystyrene, all these films preferably having a matt surface finish.

TRANSFERABLE FILM

The dry transferable film preferably consists of an organic polymer which may also contain plasticisers, dyes, pigments, stabilisers and fillers. Suitable polymers are cellulose nitrate; cellulose acetate; celuose acetobutyrate; ethyl cellulose; ethylhydroxyethyl cellulose; alkyds and alkyds modified or copolymerised with a drying oil, styrene, urethane, vinyl, silicone and acrylic resins; polyvinylhalides, -esters and -acetals; polyurethanes; epoxy polymers and copolymers; urea-, melamine- and benzoguanamine-formaldehyde polymers; chlorinated and isomerised rubber; polystyrene and polyvinyl toluene; polysiloxanes and silicone containing polymers; polyacrylates polymethacrylates and thermosetting acrylic resins; polyvinyl alcohol; polyethylene glycol; gelatin; zein; casein, starch or modified starch.

The above polymers are applied to the carrier sheet preferably in the form of a layer of viscous liquid such as a lacquer, i.e. a solution in organic solvents, or an aqueous emulsion, hot melt, plastisol, organosol or as a liquid monomer or liquid polymer containing catalyst. Various coating process which may be used are roller, knife, metering bar, wire rod, spray or extrusion, or a printing process may be used to give a uniform layer, such as screen process, flexographic or gravure printing. The layer is then dried or set. If the lacquer contains a solvent this should not sufficiently dissolve or attack the carrier film under the particular drying conditions and coating thickness, to damage it mechanically or to prevent the desired elongation values or to increase the adhesion of the transferable film to carrier sheet past the acceptable limits.

The transferable layer is formulated to provide the necessary physical specifications of tensile strength, elongation and adhesion to the carrier sheet. Tensile strength is mainly determined by the polymer used and to a less extent on the plasticiser concentration; elongation is also determined mainly by the polymer and the amount of plasticiser; mutual adhesion between carrier sheet and transferable layer is determined by the polymers used for both the carrier sheet and transferable layer and also by the plasticiser concentration of the latter, a high plasticiser concentration giving more mutual adhesion than a low plasticiser concentration. The same chemical class of polymer is preferably not used for the carrier sheet and the transferable layer since strong specific adhesion forces are usually produced. Solvents used in applying the transferable layer may increase adhesion to the carrier sheet if they etch or soften it. Solvents are avoided which mechanically damage the carrier sheet.

Pigments, dyes, fillers and stabilisers may be incorporated in the transferable layer. These have a moderate effect on tensile strength, elongation and adhesion which must be allowed for. The tensile strength of the transferable layer is dependent on its thickness and this is also controlled.

The transferable film, after application to the surface of a receiving object, has adequate adhesion to withstand handling and use but may be partly or entirely removed from the receiving surface without damage, even to delicate surfaces such as paper, by scoring and lifting up an edge of the transferable film with a needle or knife and peeling it away. This requires that the transferable film has adequate tensile strength and preferably has a tensile strength at break point higher than the peel bond of the adhesive to the receiving surfaces. However, the transferable film may be formulated from ingredients which can be softened by solvents and in that case it may readily be provided that the transferable film, after application to the receiving surface, may be softened by a fixing solvent or varnish and, after evaporation of the solvent, the transfer will be adhered to the receiving surface so that it is no longer readily removable.

The transferable film may also be formulated with materials which are not softened and increased in adhesion by selected paints and inks so that these paints and inks may be applied over the transfer which is therefore operating as a mask or stencil. After drying, the transfer may be removed as described above, leaving an image in paint or ink on the receiving surface.

ADHESIVE LAYER

The adhesive preferably comprises a two component system one component being a polymer or resin which is intrinsically tacky, such as a tacky elastomer, or has admixed therewith a resin imparting tackiness, and a second component which is a tack controlling component to reduce the tack of the adhesive layer to the desired peel bond value. The second component also imparts cutting or shearing properties to the adhesive layer so that it will cut when the transferable film is cut or will shear as the carrier sheet is lifted away from the receiving surface. These shearing or cutting properties are achieved by a material or very low tensile strength, and of particular value in ensuring that no adhesive transfers to the receptor surface from outside the boundaries of the transferred area of transferable film. The second component is preferably a readily deformable material in order to allow the adhesive layer to make adequate contact with the receiving surface, which may be rough in texture. The tack controlling component may conveniently be used at a concentration of 6–65 parts per 100 parts of the total tacky component.

Intrinsically tacky polymers include polyacrylic or methacrylic esters and acids; polyvinvyl ethers; copolymers of vinylethers and the aforesaid acrylic compounds; polyisobutylene and polybutenes; natural rubber; synthetic polyisoprene; polyvinyl esters; polychloroprene; polybutadiene and also copolymers with styrene. Tack-

ifying resins include hydrocarbon resins; terpene resins such as poly B-pinene; rosin; rosin derivatives such as hydrogenated rosin and esters; and liquid mixtures of polymeric styrene and homologues. Preferred materials are polyvinylbutylether; polyvinyl isobutylether; polyvinylethylether, polyvinylmethylether; polybutylacrylate or copolymers of butylacrylate and methacrylate.

The tack controlling, low tensile and deformable component may consist of a wax or wax like material having a Durometer hardness of less than 100 Durometer units (ASTMD 676–49T, Shore A2 instrument). Generally suitable materials are long chain hydrocarbons containing 12 or more carbon atoms such as paraffin and microcrystalline wax polyethylene waxes i.e. low molecular weight polyethylene, Fischer Tropsch waxes, and saturated and unsaturated long chain hydrocarbon derivatives such as carboxylic acids (fatty acids) and their metal salts, esters, alcohols, amides; nitriles, amines, amine salts, quaternary ammonium derivatives, fatty acid mono or polyesters of polyols and polyethyleneglycols; fatty alcohol ethers of polyethyleneglycols; polyethyleneglycols, polypropyleneglycols and the like.

All the components of the adhesive may be applied as an aqueous emulsion. Alternatively they may all be applied as solutions in organic solvents or one component such as a wax may be dispersed in the solvent and the tacky component be in solution. The adhesive layer may be applied by coating or printing as for the transferable film layer, and dried. The solvents used in the adhesive layer should not damage the transferable film layer.

PROTECTIVE SHEETS

Suitable protective sheets may consist of a support sheet to which is applied a release material to provide the required low adhesion values to the adhesive layer. Suitable support sheets are cellulosic materials such as kraft paper, glassine paper and vegetable parchment paper. Suitable release materials are fatty acid chromium complexes or siloxanes such as polymethyl-siloxanes. The siloxane is preferably obtained by applying a reactive material to the support which polymerises or copolymerises with the support sheet to provide a siloxane which is insoluble, non-migratory and strongly adherent and therefore does not affect the adhesive properties of the adhesive layer by migration into the adhesive or transfer onto the adhesive. For example, suitable reactive materials are methyl hydrogenpolysiloxanes, a metal salt catalyst being useful as a catalyst to accelerate polymerisation, and the materials may be applied as fluids, solutions in organic solvents or aqueous emulsions.

INDICIA

The transferable film layer, consisting of one or more continuous areas of clear or coloured transferable film on the carrier sheet may be further printed with ink indicia, which need not be film forming, either by printing the carrier sheet with such indicia before application of the transferable film, or by printing the transferable film after application of it to the carrier sheet; in both events, the ink indicia should adhere irreversibly to the transferable film and transfer with it in all subsequent operations.

The indicia, if any, are applied by any printing process. An ink is used which has sufficient adhesion to the transferable film to adhere to it under all conditions of use of the transfer. A pigmented or dyed ink containing the same polymer system as the transferable film layer gives excellent adhesion but other inks based upon drying oil varnishes and alkyds and other polymers are useful. Inks having other functional properties containing for example ceramic frits or ceramic pigments, magnetic iron oxide; conductive silver oxide or graphite particles may also be used for special applications. The dry transfer sheets of the present invention may be constructed with different forms of transferable film and several principal products, with an indication of their methods of use, will now be described.

Transfer colour sheets.—In these materials the transferable film layer is uniformly coloured. These materials have valuable commercial applications and advantages. In the following description, it is understood that the transferable layer is cut and transferred by whichever of the three processes previously described is most convenient, namely the cut-out process, the differential cutting process or the pre-scoring process. For example a transfer sheet having a single transferable layer of continuous and uniform colour is of value for example to artists, draughtsmen, architects, cartographers, for applying colour to artwork, drawings, maps, prototypes, models and displays to replace liquid paint, ink, crayon and coloured tape. The transferred colour has the advantages of uniform and exact colour, exact positioning, requires no drying, is fast to apply and requires little skill. The transferred colour may be so thin that it exactly simulates direct printing or painting; corrections and alterations are easily made and yet the transferred colour is strongly adhering and if necessary may be irreversibly fixed. The colour may be transferred by freehand cutting with a needle stylus or alternatively the stylus may be used with a guide such as straight edge, curve, or template, compass or pantograph. Thus two strokes of the needle stylus guided with a straight edge will transfer perfectly straight lines or wide bands of colour which is of value in drafting work for illustrating pipelines, walls, circuits, ductwork, etc. Circles may be cut with precision using the needle in a compass. Lines or bands of colour may also be applied in a single cutting operation using twin needles in a stylus. Intricate shapes and designs may be cut and transferred, including lettering and numerals.

When the transfer colour sheets are provided as transparent colours, two or more colours may be superimposed or overlapped to give intermediate colours and by employing a relatively limited range of bright colours in a graduated series of densities, in particular a trichromatic or four-colour series of yellow, cyan, magenta and grey, intermediate colours may be produced by superimposing on subtractive colour principles to provide a medium of considerable value to the process engraver and graphic artist.

Areas of colour may be applied to a wide variety of surfaces for displays and exhibitions. Precision butt joins can be made between colour areas by transferring the first colour area and then overlapping with the second transfer colour sheet and using an edge of the first colour as a guide for the needle stylus when cutting the second colour. Walls may therefore be decorated with uniform areas of transfer colour to simulate direct painting. Designs may be applied to walls as murals.

The transfer colour may also be applied to glass and transparent plastic surfaces for decoration effects, e.g. to simulate stained glass, or for functional applications such as the use of a semi-transparent white transfer sheet to convert a clear glass or plastic sheet into an opal or light diffusing material, or to provide an ultra-violet or other radiation filter. Colour may be transferred to slides, film and other surfaces for optical projection.

Photomechanical tint sheets.—A clear, transparent film layer may be overprinted with an adhering ink, as described, in the form of half tone dots of any frequency and size, or with line rulings, shading, cross-hatching, stipples and other designs which are useful as mechanical tints or shading media in photomechanical work, map making and drafting work. Such designs may be easily transferred in an exact position to simulate direct hand drawing or direct printed reproductions, with the advantage of a substantial saving of skilled labour and time. Drawings and artwork prepared with these photomechanical tints, particularly with the half tone dot sheets, may be converted into printing plates, blocks or cylinders by direct photography without the need for complicated half

tone dot exposure through ruled screens or contact screens.

Mask.—The transferable film may be applied to a selected area of a photograph, or drawing. Parts of this transferred film may also be cut and removed by lifting off with a knife blade or adhesive tape. Colour may then be applied by spray, brush, or roller over the masked and unmasked areas and when dry the transferrable film may be lifted off with a knife tip, or rubbed off with an eraser, or lifted off with adhesive tape, to leave these protected areas free from colour.

Photographic mask.—A transfer sheet of a uniform transparent red colour may be used which has sufficient density to blue and blue-green light to record as black on process and orthochromatic photographic sensitive materials. Such a sheet has numerous uses as a photographic opaque material.

Gold effects.—Gold and silver effects are difficult to achieve by brush, pen or crayon particularly on paper surfaces when metallic brilliance, uniformity and non-tarnishing properties are required. Dry transfer sheets with uniform areas of gold or imitation gold pigmented transferable film are of particular value.

Colour trim.—Mass production items may be decorated with colour, including gold trim, by the use of colour transfer sheets, which has advantages over spray painting that costly masking with tape is not required.

Thermosetting transfers.—The transferable film layer and the adhesive layer may be formulated with thermosetting inks and adhesives which may be stoved or baked after transfer to increase adhesion and hardness.

Ceramic transfers.—The transferable film layer may be overprinted with ceramic inks for applying colour and designs to ceramics and glass which are fired after transfer to burn away the transferable film layer and fuse the ceramic ink onto the surface.

Screen printing stencil.—The transferable film layer may be applied to a screen printing mesh and bonded irreversibly with a solvent. The transferable film then acts as a screen printing stencil.

Etching resist.—The transferable film may be applied to metal surfaces which are subsequently etched with acids and other chemicals, the transfer being resistant to the etch.

The following examples will serve to illustrate the invention (parts given are by weight):

Example 1

A carrier sheet is employed which consists of a light transmitting film of polyethylene of density .95 g./ml. having a matt finish and a caliper of .003 inch with an elongation at breakpoint of 200% and a tensile strength of 3.5×10^3 p.s.i., and which can be strongly scored with a needle stylus without being cut. To this carrier sheet there is applied a transferable film layer consisting of cellulose nitrate polymer and a plasticiser to produce a transparent transferable film layer; the additional incorporation of a pigment produces a coloured transferable film layer, the transparent and coloured film layers having composition in the following range:

	Parts
Cellulose nitrate, nitrogen content 10.5–11.2%	100
Plasticiser	30–150
Pigment	0–25

Typically, a brown pigmented transferable film layer consists

	Parts
Cellulose nitrate	100.0
Carbon black	0.8
Dinitraniline orange	0.8
Dimethylcyclohexyladipate (plasticiser)	62.0

A lacquer is prepared by dissolving the polymer and plasticiser in butyl acetate, incorporation of the pigments by triple roll milling and applied by screen process printing to give a continuous layer on the carrier sheet of .0004–.0006 inch thickness after drying. Alternatively a transparent transferable layer of an unipigmented formulation as above may be overprinted with indicia consisting of a pigmented ink.

To the carrier sheet and transferable layer, there is applied an adhesive layer consisting of the following:

	Parts
Polyvinylbutylether	50
80% butylacrylate and 20% methylmethacrylate copolymer	50
Monostearylalcoholether of polyethyleneglycol	15–60

The first two items in the above formulations are tacky elastomers and the third item is the tack controlling component. The concentration of the tack controlling component determines the adhesion to the receiving surface and in the present example a concentration of 43 parts provides an adhesion of 90 grams per inch peel bond against the standard matt polyester film receiving surface at an applied pressure of 100 p.s.i. and tested at a rate of peel of one foot per minute.

The adhesive is applied as a liquid consisting of an aqueous emulsion of the two tacky elastomers mixed with an aqueous dispersion of the tack controlling component. The liquid is applied uniformly by a roller coating machine to provide a dry adhesive layer of .0002–.00025 inch thickness.

Example 2

A carrier sheet is employed which consists of a transparent film of polypropylene of density 0.91 g./ml. having a gloss finish, a caliper of .004 inch, an elongation of 600% and a tensile strength of 4×10^3 p.s.i.

To this carrier sheet there is applied a transferable layer according to any of the formulations of Example 1, a particular example being:

	Parts
Cellulose nitrate	100
Castor oil modified polyglycerylsebacate (viscous liquid plasticiser)	102

To the transferable layer there is applied an adhesive layer consisting of:

	Parts
Polyisobutylene, M wt. 15,000	100
Microcrystalline wax, M.P. 58° C.	8.5

the first ingredient being a very tacky polymer and the second ingredient the tack controlling component. The adhesive is applied as a viscous liquid in which the polymer is dissolved in aliphatic hydrocarbon solvent and the wax is present in this solution partly in solution and partly as a fine dispersion.

The transferable film on transfer to a receiving surface has a gloss finish.

Example 3

A carrier sheet is used which consists of polystyrene plasticised with butadiene to provide a semi-gloss film with caliper .002 inch and an elongation of 40%. To this sheet there is applied a clear transferable layer of a drying oil modified polyurethane polymer applied in solution in ethyleneglycolmonoethylether, together with a cobalt naphthenate drier at a concentration of .01% cobalt metal on the polymer. After evaporation of the solvent and further drying by oxidation a strong solvent insoluble, transferable film is obtained.

The adhesive of Example 1 is then applied as a layer.

Example 4

A carrier sheet consists of a lightly embossed or creped sheet of translucent vegetable parchment paper, containing glycerol as plasticiser if required to control elongation at break point to 10% and with caliper of .0015 inch to which there is applied a coating consisting of stearato chromic chloride in isopropanol which reacts on heat drying with the paper surface to form a chemically united continuous release coating. To this there is applied a co-

polymer of urea-formaldehyde polymer and coconut oil (essentially C_{12} fatty acid esters) modified polyglycerylphthalate, the latter acting as a plasticiser to give a highly cross-linked transferable film after curing by heat which is rigid and solvent insoluble and has an elongation of 5%. To this film there is applied by offset lithography a black linseed oil modified alkyd ink in the form of photo mechanical regular half-tone dot pattern of 60 dots per inch with 25% dot and 75% space between the dots. The adhesive of Example 1 is now applied over the oxidation dried indicia and a silicone coated protective cover sheet applied.

When required for use, the protective cover is removed and the transfer sheet is placed adhesive side down onto a sheet of drawing paper, such as original printing artwork, over a light pencil outline. The carrier sheet is scribed in a complete circuit with a needle stylus having a tip diameter of .002 inch and applied at writing pressure force of about 80–100 grams which produces a scored line of about .006 inch wide in the carrier sheet and is equivalent to a pressure of about 15,000 p.s.i. The area within the scored line is now pressed into firm contact by the strokes of a ball point pen with .04 inch diameter ball giving a pressure of about 800 p.s.i. at a light writing load of 30 grams over a band width of .01 inch. The carrier sheet is now lifted away to leave the dot pattern transferred precisely in the correct position.

Example 5

The transfer sheet of Example 1 having a transparent transferable film is scored with a needle stylus while against the protective backing paper according to the drawn outline of a design. The backing paper is removed and the transfer sheet is placed in light contact with a nylon screen printing mesh tensioned on a printing frame. High pressure is applied to the back of the carrier sheet over the area to be transferred by a series of strokes with a wood stylus having a tip diameter of .1 inch. The carrier sheet is lifted away leaving the selected transferable film area transferred to the mesh. The transfer is now strongly adhered to the mesh by applying a solvent consisting of:

	Parts
Ethylacetate	10
74 o.p. ethyl alcohol	90

This solvent is conveniently applied by an aerosol spray consisting of:

	Parts
Above solvent	34
Propellant, dichlorodifluoro methane	66

Screen printing may now be carried out or further photographic stencils or liquid stencil filler applied to the mesh to provide composite designs for subsequent screen printing.

We claim as our invention:

1. A scribable transfer sheet comprising essentially a carrier sheet, a thin transferable film layer carried by said carrier sheet on one face thereof and extending over a substantial portion of the area of said carrier sheet, an adhesive layer carried by said film layer, said film layer being fracturable upon scribing upon the face of said carrier sheet remote from said film layer thereby applying high localized pressure without cutting through said carrier sheet.

2. A scribable transfer sheet as in claim **1** wherein the peel bond of said carrier sheet to said transferable film is greater than the peel bond between said film and a receiving surface under light finger pressure, and wherein said adhesive layer is pressure-sensitive and has increasing adhesiveness under increasing pressure so as to cause the peel bond between said film layer and receiving surface to increase upon rubbing said carrier sheet face with localized high pressure, and to exceed the peel bond between said film layer and carrier sheet.

3. A transfer sheet which comprises essentially a carrier sheet A, a thin transferable film layer B carried by said carrier sheet on one face thereof and being substantially coextensive in area with said carrier sheet, an adhesive layer C carried by said film layer, and a separable protective covering sheet D applied on said adhesive layer and removable without disturbing said adhesive layer C or said transferable film layer B; said film layer B being fracturable on application of high localized pressure insufficient to rupture said carrier sheet A, so that application of such pressure by scribing a line on the other face of the carrier sheet A opposite the face carrying the film layer B will cause the fracture of the layer B in register with that line even though the carrier sheet A is not itself cut through by such scribing action.

4. A transfer sheet which comprises essentially a carrier sheet A, a thin transferable film layer B carried by said carrier sheet on one face thereof and being substantially coextensive in area with said carrier sheet, an adhesive layer C carried by said film layer, and a separable protective covering sheet D applied on said adhesive layer and removable without disturbing said adhesive layer C or said transferable film layer B; said film layer B being fracturable on application of high localized pressure insufficient to rupture said carrier sheet A, so that application of such pressure by scribing a line on the other face of the carrier sheet A opposite the face carrying the film layer B will cause the fracture of the layer B in register with that line even though the carrier sheet A is not itself cut through by such scribing action, the peel bond of the carrier sheet to the transferable film being higher than the peel bond between the transferable film and a receiving surface under light finger pressure.

5. A transfer sheet which comprises essentially a carrier sheet A, a thin transferable film layer B carried by said carrier sheet on one face thereof and being substantially coextensive in area with said carrier sheet, an adhesive layer C carried by said film layer, and a separable protective covering sheet D applied on said adhesive layer and removable without disturbing said adhesive layer C or said transferable film layer B; said film layer B being fracturable on application of high localized pressure insufficient to rupture said carrier sheet A, so that application of such pressure by scribing a line on the other face of the carrier sheet A opposite the face carrying the film layer B will cause the fracture of the layer B in register with that line even though the carrier sheet A is not itself cut through by such scribing action, the carrier sheet having a higher elongation at break point than the transferable film.

6. A transfer sheet which comprises essentially a carrier sheet A, a thin transferable film layer B carried by said carrier sheet on one face thereof and being substantially coextensive in area with said carrier sheet, an adhesive layer C carried by said film layer, and a separable protective covering sheet D applied on said adhesive layer and removable without disturbing said adhesive layer C or said transferable film layer B; said film layer B being fracturable on application of high localized pressure insufficient to rupture said carrier sheet A, so that application of such pressure by scribing a line on the other face of the carrier sheet A opposite the face carrying the film layer B will cause the fracture of the layer B in register with that line even though the carrier sheet A is not itself cut through by such scribing action, the peel bond value between the carrier sheet and the transferable film being substantially 1 to 20 grams, the adhesive layer and the transferable film being essentially incapable of being peeled apart, the peel bond value of the adhesive layer onto the receiving surface after application of a pressure of about ½ p.s.i. being less than 15 grams, the peel bond value of the adhesive layer to a receiving surface after application of a pressure of about 100 p.s.i. being substantially 20 to 400 grams, the peel bond value of the adhesive layer to the protective layer being substantially 0 to

5 grams at about 100 p.s.i., and the tensile strength of the transferable film being over about 20 grams per inch width.

7. A transfer sheet which comprises essentially a polymer carrier sheet A, a thin transferable coloured film layer B carried by said carrier sheet on one face thereof and being substantially coextensive in area with said carrier sheet, an adhesive layer C carried by said film layer, and a separable protective covering sheet D applied on said adhesive layer and removable without disturbing said adhesive layer C or said transferable film layer B; said film layer B being fracturable on application of high localized pressure insufficient to rupture said carrier sheet A, so that application of such pressure by scribing a line on the other face of the carrier sheet A opposite the face carrying the film layer B will cause the fracture of the layer B in register with that line even though the carrier sheet A is not itself cut through by such scribing action.

8. A transfer sheet which comprises essentially a polyethylene carrier sheet A, a thin transferable coloured film layer B carried by said carrier sheet on one face thereof and being substantially coextensive in area with said carrier sheet, an adhesive layer C carried by said film layer, and a separable protective covering sheet D applied on said adhesive layer and removable without disturbing said adhesive layer C or said transferable film layer B; said film layer B being fracturable on application of high localized pressure insufficient to rupture said carrier sheet A, so that application of such pressure by scribing a line on the other face of the carrier sheet A opposite the face carrying the film layer B will cause the fracture of the layer B in register with that line even though the carrier sheet A is not itself cut through by such scribing action.

9. A transfer sheet which comprises essentially a polymer carrier sheet A, a thin transferable coloured film layer B carried by said carrier sheet on one face thereof and being substantially coextensive in area with said carrier sheet, an adhesive layer C carried by said film layer, and a separable protective covering sheet D of silicone-coated paper applied on said adhesive layer and removable without disturbing said adhesive layer C or said transferable film layer B; said film layer B being fracturable on application of high localized pressure insufficient to rupture said carrier sheet A, so that application of such pressure by scribing a line on the other face of the carrier sheet A opposite the face carrying the film layer B will cause the fracture of the layer B in register with that line even though the carrier sheet A is not itself cut through by such scribing action, the adhesive layer C being of low tack and composed of an intrinsically tacky polymer component and a wax-like tack-reducing component.

10. A transfer sheet which comprises essentially a polymer carrier sheet A, a thin transferable coloured film layer B carried by said carrier sheet on one face thereof and being substantially coextensive in area with said carrier sheet, an adhesive layer C carried by said film layer and a separable protective covering sheet D applied on said adhesive layer and removable without disturbing said adhesive layer C or said transferable film layer B; said film layer B being fracturable on application of high localized pressure insufficient to rupture said carrier sheet A, so that application of such pressure by scribing a line on the other face of the carrier sheet A opposite the face carrying the film layer B will cause the fracture of the layer B in register with that line even though the carrier sheet A is not itself cut through by such scribing action, the adhesive layer C being formed of a composition of low tack made up of 100 parts by weight of an intrinsically tacky component and 6 to 65 parts by weight of a wax-like tack-reducing component.

11. A method for the production of an article having an image-bearing surface which comprises taking a transfer sheet which comprises essentially a carrier sheet A, and a thin transferable film layer B carried by said carrier sheet and extending over a substantial portion of the area of said carrier sheet, an adhesive layer C carried by said film layer, scribing on the surface of the carrier sheet the closed outline of a desired image to fracture the transferable layer in register with said outline without fracturing the carrier sheet, applying the resulting product to the surface to be decorated, applying pressure of at least 50 p.s.i. within the area thus circumscribed and thereafter peeling away the carrier sheet, thereby to leave the circumscribed area of transferable film adherent by the adhesive layer to the said surface.

References Cited

UNITED STATES PATENTS

2,647,849	8/1953	Douglas et al.	161—245
3,035,957	5/1962	Morgan et al.	161—406
3,047,443	7/1962	Anderson	156—219
3,212,913	10/1965	Mackenzie et al.	161—230
3,276,933	10/1966	Brant	161—406
3,297,508	1/1967	Jahp	161—406

EARL M. BERGERT, *Primary Examiner.*

W. E. HOAG, *Assistant Examiner.*

U.S. Cl. X.R.

161—167