PCT WORLD INTELLECTUAL PROPERTY ORGANIZATION
International Bureau

INTERNATIONAL APPLICATION PUBLISHED UNDER THE PATENT COOPERATION TREATY (PCT)

(51) International Patent Classification 7 : G01N 1/06, 1/31

A1

(11) International Publication Number: **WO 00/62035**

(43) International Publication Date: 19 October 2000 (19.10.00)

(21) International Application Number: PCT/US00/09302

(22) International Filing Date: 7 April 2000 (07.04.00)

(30) Priority Data:
09/289,181 9 April 1999 (09.04.99) US

(71) Applicant *(for all designated States except US)*: CULTERRA, LLC [US/US]; 1822 Worchester Street, Baltimore, MD 21230 (US).

(72) Inventors; and
(75) Inventors/Applicants *(for US only)*: VONEIFF, John [US/US]; 14 Blythewood Road, Baltimore, MD 21210 (US). GIBSON, Jay, F. [US/US]; 8319 Catherine Avenue, Passadena, MD 21122 (US). PASTERNACK, Gary, R. [US/US]; 311 Edgevale Road, Baltimore, MD 21212 (US).

(74) Agents: POSORSKE, Laurence, H. et al.; Baker Botts, L.L.P., The Warner, 1299 Pennsylvania Avenue, N.W., Washington, DC 20004 (US).

(81) Designated States: AE, AL, AM, AT, AU, AZ, BA, BB, BG, BR, BY, CA, CH, CN, CR, CU, CZ, DE, DK, DM, EE, ES, FI, GB, GD, GE, GH, GM, HR, HU, ID, IL, IN, IS, JP, KE, KG, KP, KR, KZ, LC, LK, LR, LS, LT, LU, LV, MA, MD, MG, MK, MN, MW, MX, NO, NZ, PL, PT, RO, RU, SD, SE, SG, SI, SK, SL, TJ, TM, TR, TT, TZ, UA, UG, US, UZ, VN, YU, ZA, ZW, ARIPO patent (GH, GM, KE, LS, MW, SD, SL, SZ, TZ, UG, ZW), Eurasian patent (AM, AZ, BY, KG, KZ, MD, RU, TJ, TM), European patent (AT, BE, CH, CY, DE, DK, ES, FI, FR, GB, GR, IE, IT, LU, MC, NL, PT, SE), OAPI patent (BF, BJ, CF, CG, CI, CM, GA, GN, GW, ML, MR, NE, SN, TD, TG).

Published
With international search report.
Before the expiration of the time limit for amending the claims and to be republished in the event of the receipt of amendments.

(54) Title: SYSTEM AND METHOD FOR AUTOMATICALLY PROCESSING TISSUE SAMPLES

(57) Abstract

An apparatus and method for producing tissue slides is disclosed. The apparatus includes a holding assembly for manipulating the sample block, a blade assembly for preparing a thin section from the sample block, and a transfer roller mechanism for transferring the thin section to a receiving medium. The apparatus further includes a controller that may track the sample block and thin section. The method includes the steps of first locating a sample embedded within a support medium, which may be paraffin or a similar medium. Next, the embedded sample is oriented in such a way that its working surface is presented. This orientation may entail determining the orientation of the embedded sample with respect to the blade that will produce the largest cross–sectional area. Next, a slice of the sample from said embedded sample is removed and subsequently transferred to a suitable receiving medium, which may include a microscope slide. The slices may be stained, and a representation of the slice may be captured by an image capture device. The sample blocks may be transferred to a holding device, where they may be indexed and stored.

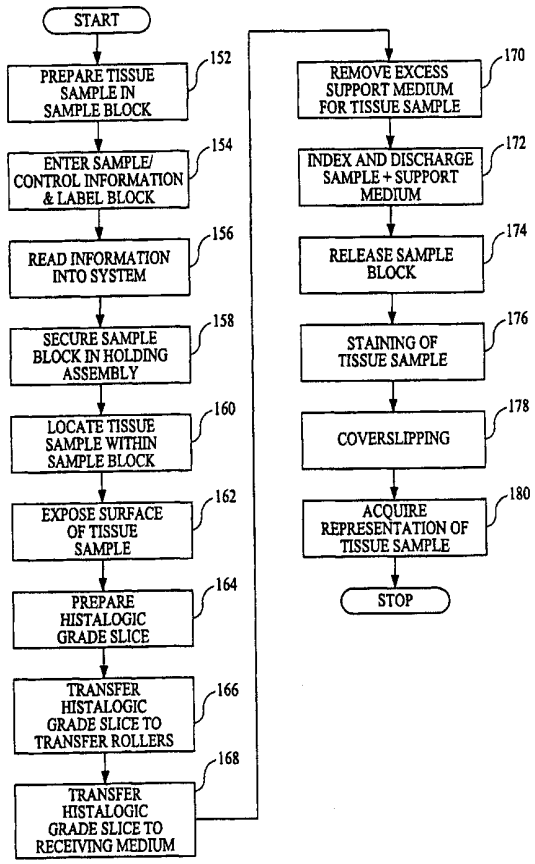

FOR THE PURPOSES OF INFORMATION ONLY

Codes used to identify States party to the PCT on the front pages of pamphlets publishing international applications under the PCT.

AL	Albania	**ES**	Spain	**LS**	Lesotho	**SI**	Slovenia
AM	Armenia	**FI**	Finland	**LT**	Lithuania	**SK**	Slovakia
AT	Austria	**FR**	France	**LU**	Luxembourg	**SN**	Senegal
AU	Australia	**GA**	Gabon	**LV**	Latvia	**SZ**	Swaziland
AZ	Azerbaijan	**GB**	United Kingdom	**MC**	Monaco	**TD**	Chad
BA	Bosnia and Herzegovina	**GE**	Georgia	**MD**	Republic of Moldova	**TG**	Togo
BB	Barbados	**GH**	Ghana	**MG**	Madagascar	**TJ**	Tajikistan
BE	Belgium	**GN**	Guinea	**MK**	The former Yugoslav Republic of Macedonia	**TM**	Turkmenistan
BF	Burkina Faso	**GR**	Greece			**TR**	Turkey
BG	Bulgaria	**HU**	Hungary	**ML**	Mali	**TT**	Trinidad and Tobago
BJ	Benin	**IE**	Ireland	**MN**	Mongolia	**UA**	Ukraine
BR	Brazil	**IL**	Israel	**MR**	Mauritania	**UG**	Uganda
BY	Belarus	**IS**	Iceland	**MW**	Malawi	**US**	United States of America
CA	Canada	**IT**	Italy	**MX**	Mexico	**UZ**	Uzbekistan
CF	Central African Republic	**JP**	Japan	**NE**	Niger	**VN**	Viet Nam
CG	Congo	**KE**	Kenya	**NL**	Netherlands	**YU**	Yugoslavia
CH	Switzerland	**KG**	Kyrgyzstan	**NO**	Norway	**ZW**	Zimbabwe
CI	Côte d'Ivoire	**KP**	Democratic People's Republic of Korea	**NZ**	New Zealand		
CM	Cameroon			**PL**	Poland		
CN	China	**KR**	Republic of Korea	**PT**	Portugal		
CU	Cuba	**KZ**	Kazakstan	**RO**	Romania		
CZ	Czech Republic	**LC**	Saint Lucia	**RU**	Russian Federation		
DE	Germany	**LI**	Liechtenstein	**SD**	Sudan		
DK	Denmark	**LK**	Sri Lanka	**SE**	Sweden		
EE	Estonia	**LR**	Liberia	**SG**	Singapore		

SYSTEM AND METHOD FOR AUTOMATICALLY PROCESSING TISSUE SAMPLES

BACKGROUND OF THE INVENTION

1. Field of the Invention

The invention relates generally to the field of histology. In particular, the present invention is directed to an apparatus and method for automatically producing tissue slides.

2. Description of Related Art

Histology, the study of the groups of tissues found in most multicellular plants and animals, often requires that the plant or animal tissue be provided in thin sections for study. One known technique to create thin sections of tissue is through the use of a microtome. The function of the microtome is simplistic and very much like that of any mechanical slicer which carves a pre-set measured slice and retains and advances that unit of measure for each subsequent cutting cycle. The cutting results are very much dependent upon a technician's practical skill.

Typically, tissue samples for general pathology examination are surrounded by a support medium and manually molded into standardized blocks. Paraffin is a known and commonly-used as a support medium. TissueTek O.C.T., manufactured by Sakura Finetek and available from VWR Scientific, West Chester, Pennsylvania, may also be used as a support medium. The optimum cutting temperature (O.C.T.) formulation of water-soluble glycols and resins in TissueTek O.C.T. provides a convenient specimen matrix for cryostat sectioning at temperatures of -10°C and below. Resins and polymers, such as methacrylates, may also be used as support media. Although resins and polymers are primarily used for electron microscopy, they can also be used for standard microscopy with some adjustments for hardness of the final product. Suitable resins and polymers, including Araldite 502 Kit, Eponate 12™ Kit, and Glycol Methacrylate (GMA) Kit, are available from Ted Pella, Inc., Redding, California.

The tissue sample is manipulated in a metal support medium block mold by the technician so as to locate it close to what will become the top center surface of the support medium block. This top surface then becomes the working surface of the sample block. The sample block preparation process will be described using paraffin as the support medium.

As the tissue sample is being located, oriented, and set within the support medium block mold, melted paraffin is added. The paraffin cools and hardens inside the block mold; and as it does, a plastic holder is inserted. In the hardening process, the bottom half of the paraffin block becomes locked within the frame of the plastic holder which becomes the base of the sample block. A technician then transfers the sample block to a microtome to prepare very thin sections of the tissue sample for later observation.

The prepared sample blocks are manually locked into an adjustable clamp assembly of the microtome. The technician can make limited manual adjustments to the clamp assembly in order to present the sample block's working surface to the microtome's cutting blade at an angle judged to be most favorable to yielding the best possible sample slice. The clamp adjustment for a given sample block is a subjective choice based on the judgement and experience of the technician.

The technician can make additional microtome adjustments that pre-set the starting lineal distance between the clamp assembly and the assembly holding the cutting blade, as well as the thickness of the sample slice each time the clamp assembly is cycled by moving it past the blade assembly. There is also limited adjustment of the angle of the cutting blade as presented to the clamp assembly; however, the optimum setting of the blade is typically about 45 degrees from vertical.

One sample slice is the product of one microtome cycle. Once a technician selects the orientation of the sample block's working surface to the cutting blade assembly's cutting blade, several cutting cycles are required to advance the cutting blade into the block to a working surface depth, where the slices then taken are suitable for slide application. These slices may be referred to as histologic grade slices, which are slices that a pathologist or other professional

would find of acceptable quality for examination purposes. In particular, histologic grade slices are slices of a relatively uniform thickness without any significant tears, folds, wrinkles, or contamination from unrelated specimens or other artifacts. Histologic grade slices are substantially flat and smooth.

When a suitable sample depth is acquired, the technician may cycle the clamp (with the sample block locked within) one to several times to obtain a series of histologic grade slices. After each slice, a mechanism in the microtome advances the block toward the knife by the desired slice thickness, which may be set by the technician. A typical slice thickness is about 4 to 8 microns, but may vary from 1 to more than 10 microns.

The technician places the slices onto the surface of warm water, located in a pan next to the microtome. The tissue sample, still secured in its paraffin matrix, floats on the surface of the water. The warmth of the water softens the paraffin, thereby removing wrinkles or other distortions in the slice. The technician may also move a sample slice about on the surface of the water to facilitate this result.

Once the technician judges that the floating tissue/paraffin matrix sample has the desired flat form, the technician brings a receiving medium, such as a microscope slide, up under the portion of the floating sample slice that captures the full tissue specimen. Repetitive success in this, again, depends upon the skill of the technician. The slide with sample is then set aside for drying, staining and evaluation, or for various molecular or histochemical analysis.

Occasionally, such as during performance of surgical procedures, it may be necessary to get a rapid diagnosis of a pathologic process. For example, a surgeon may want to know if the margins of his resection for a malignant neoplasm are clear before closing, or an unexpected disease process may be found and require diagnosis to decide what to do next, or it may be necessary to determine if the appropriate tissue has been obtained for further workup of a disease process. This may accomplished through use of a frozen section.

Frozen sections are performed with an instrument called a cryostat. The cryostat is essentially a refrigerated box containing a microtome. The temperature inside the cryostat is about -20 to -30 °C. The piece of tissue to be

studied is snap frozen in a cold liquid or cold environment (-20 to liquid nitrogen temperature °C). TissueTek O.C.T. would be a suitable support medium for frozen sections. The freezing makes the tissue solid enough to section with a microtome. The tissue sections are cut and picked up on a glass slide. The sections are then ready for staining.

Although this process is effective, it is very time consuming and very dependent on the skill of the technician. As hospitals and laboratories seek to lower operating costs, they will seek to find more efficient ways to accomplish inefficient tasks. Also, it is desirable to reduce the variation in sample preparation that may occur between different technicians.

Once slides are produced, a pathologist may examine the slides using devices, such as microscopes, to magnify the tissue sample. Typically, this may be accomplished in the same hospital or medical care facility in which the slides are produced; however, U.S. Patents Nos. 5,216,596 and 5,297,034 to Weinstein, the disclosures of which are incorporated by reference in their entireties, disclose a telepathology diagnostic network in which a remotely located pathologist can use a robotically-controlled microscope equipped with a video camera to manipulate and examine a tissue sample.

SUMMARY OF THE INVENTION

Therefore, a need has arisen for an improved apparatus and method for producing histological slides.

It is an object of the present invention to automatically perform the combined functions of the microtome and the technician.

It is a further object of the present invention to utilize mechanical robotic mechanisms to manipulate sample blocks and slides.

It is another object of the present invention to automatically determine the optimal working surface of the tissue sample.

A method of producing thin sections from an embedded sample is disclosed. In one embodiment, the method includes first locating a sample embedded within a support medium, which may be paraffin or a similar medium. Next, the embedded sample is oriented in such a way that its working surface is presented. This orientation may entail determining the orientation of the embedded

sample with respect to the cutting blade that will produce the largest cross-sectional area. Next, a slice of the sample from said embedded sample is removed and subsequently transferred to a suitable receiving medium, which may include a microscope slide.

In another embodiment, an apparatus for applying thin sections of a tissue sample to a receiving medium is disclosed. The apparatus includes a slicing means for slicing thin sections from a tissue sample. The slicing means typically includes one or more cutting blades for slicing the tissue sample. The slicing means may include a first blade assembly that slices the tissue sample to expose the tissue sample's working surface, and a second blade assembly for producing thin sections of the tissue sample. The apparatus further includes a plurality of transfer rollers that are sequentially arranged in tangential proximity to each other, such that a thin section on the surface of one transfer roller will be transferred to the surface of the sequentially successive transfer roller. The first sequential transfer roller is oriented in proximity to the slicing means so that a thin section sliced from said tissue sample contacts the surface of the first sequential transfer roller. A receiving medium is disposed in tangential proximity to a final sequential transfer roller, so that a thin section on the surface of the final sequential transfer roller will be transferred to the receiving medium in a substantially smooth and flat configuration.

In another embodiment, a method for applying thin sections of a tissue sample to a receiving medium is disclosed. The method includes first slicing a thin section from a tissue sample. The slicing causes the thin section to peel from the sample and adhere to a first transfer roller. Next, the thin section is transferred from the first transfer roller to an adjacent transfer roller that is in tangential proximity with the first transfer roller. Finally, the thin section is transferred from a final transfer roller to a receiving medium that is in tangential proximity with the final transfer roller. The thin section is placed on the receiving medium in a substantially smooth and flat configuration.

In another embodiment, an apparatus for automatically producing tissue slides from a tissue sample within a sample block is disclosed. The apparatus includes a holding assembly for manipulating the sample block, a blade assembly for preparing a thin section from the sample block, and a transfer roller mechanism

for transferring the thin section to a receiving medium. The apparatus further includes a controller that may track the sample block and thin section.

In one embodiment, a staining device, such as an automatic stainer, may be provided to apply the proper staining material to the thin section. In another embodiment, an image capture device may be provided for capturing a representation of the thin section, which may be stored or communicated to a remote location.

Other objects, features, and advantages will be apparent to persons of ordinary skill in the art in view of the following detailed description of preferred embodiments and the accompanying drawings.

BRIEF DESCRIPTION OF THE DRAWINGS

For a more complete understanding of the present invention, the needs satisfied thereby, and the features and advantages thereof, reference now is made to the following descriptions taken in connection with the accompanying drawings in which:

Fig. 1a is a general flowchart of a method for automated tissue processing according to one embodiment of the present invention.

Fig. 1b is a block diagram of a system for automated tissue processing according to one embodiment of the present invention.

Figs. 1c is a flowchart of a method for automatically producing tissue slides according to one embodiment of the present invention;

Fig. 2 schematic of the histologic grade slice blade and the transfer rollers according to one embodiment of the present invention;

Fig. 3 is a perspective view of one embodiment of the present invention;

Fig. 4 is a top view of the embodiment shown in **Fig. 3**; and

Fig. 5 is a perspective view of the transfer roller assembly of the embodiment shown in **Fig. 3**.

DETAILED DESCRIPTION OF PREFERRED EMBODIMENTS

The present invention provides an automated microtome that automatically performs one or more functions of a microtome and a technician in the manual process for making histologic slides, starting with the picking up and taking charge of the sample block with its embedded tissue, to the finished sample slide set

aside for drying and staining. The invention utilizes mechanical robotic mechanisms which permit automatic manipulation of sample blocks and slides, maintaining positive identification of the tissue samples and encoding slides, as well as the use of optical imaging technology to locate the tissue sample within the sample block. Optical imaging technology may also be used to assist in the placement of the sample slice on the slide. All of the manipulations may be operated and controlled by computer, inclusive of cataloguing sample blocks and finished slides. In toto, the system of the present invention will standardize the process (especially relative to quality and production speed) and improve the collection, storage and output of information relating to sample blocks and finished slides.

The system of the present invention may also include an automated staining device and an image capture device in order to completely automate the histologic process. The automated stainer stains and coverslips the tissue sample. The image capture obtains an electronic, chemical, or other physical representation of the sample slice. The image capture device may be used in conjunction with the automated microtome device of the present invention, or it may be used separately.

Preferred embodiments of the present invention and their advantages may be understood by referring to **Figs. 1-5**, like numerals being used for like corresponding parts in the various drawings.

Referring to **Fig. 1a,** a general flowchart for the process for automated tissue processing is provided. This description is intended as an overview; a more detailed description will be provided.

In step 102, a sample block containing a tissue sample is secured to a holding assembly. In step 104, identification information is read into the system from the sample block. In an alternate embodiment, this information may be entered manually. In step 106, the system produces histologic grade slices. In step 108, the histologic grade slices are mounted on a suitable receiving medium. In step 110, the histologic grade slice is stained. In step 112, an image of the histologic grade slice is captured. In step 114, the sample block may be released and processed, which may include indexing and storing the sample block. It should be noted that some of the steps, such as steps 110 and 112, are optional.

Referring to **Fig. 1b**, a general block diagram for the system for automated tissue processing is provided. The system may include automated microtome 120, which produces histologic grade tissue slices from a prepared tissue sample block; automated staining device 122, which provides the appropriate staining to the tissue slices; and image capture device 124, which takes and records an appropriate image of the tissue sample. Sample block processing device 126 may index and store the sample blocks after they are released from automated microtome 120. It should be noted that these elements may be used alone or in any desired combination, and that automated staining device 122 and image capture device 124 are optional equipment.

Automated microtome 120, automated stating device 122, and image capture device 124 may be arranged such that there is a common transfer mechanism that moves the slides from one device to the next. In another embodiment, the devices do not have to be colocated, and slides may be stored in an intermediate storage device, such as a device for carrying stacked slides, and may be automatically or manually moved from one device to the next.

It should be noted that the general method and system descriptions, above, are intended to provide an overview of the method and system of the present invention. The method and system will be discussed in greater detail, below.

Referring to **Fig. 1c**, a flowchart depicting the process of the present invention is provided. First, in step 152, a tissue sample is prepared. As used herein, the term "tissue" refers to a solid mass, which is typically made up of biological cells, and may also include a collection of cells in other than a solid mass, preferably from a human. However, the tissue is not limited to human tissue; it encompasses plant, animal, or any other tissue. The device of the present invention may also be used to create thin sections from samples of metals and other materials, so long as the hardness of the cutting blade exceeds the hardness of the material being cut.

The tissue sample may be any sample for which microscopic examination of thin sections is desirable. Procedures for collecting and handling such samples are well known in the art, and the sample may be prepared for sectioning by methods that are well-known in the art, such as by embedding the

tissue sample in a suitable support medium, such as a standardized paraffin block, O.C.T., or resins and polymers, all discussed above.

The present invention will be discussed using paraffin as the support medium. The present invention, however, is not limited to using paraffin as the support medium. Any suitable support medium, including, but not limited to, the known support media discussed above, may also be used. Within the contemplation of this invention, other support media may require minor variations in the method and apparatus of this invention which are within the skill in the art in view of the guidance provided herein.

It should be noted that temperature control for the tissue sample may be provided throughout the process. For example, before any slices are made, the sample block may be warmed, or cooled, to a predetermined temperature that will produce histologic grade sample slices. This temperature may be maintained throughout the entire process.

In step 154, information describing the sample may be entered, and an appropriate tracking means affixed to the sample block. The prepared sample block may labeled with information about the sample, such as, inter alia, tissue sample control numbers, type of tissue sample, etc. Known input and labeling equipment may be used to input the information and to prepare the labels. The technician preparing the tissue sample may input information regarding the patient's name, type of sample (i.e., what organ the sample came from), the number of slides that are to be made, clinical diagnosis, or any other relevant information, and may affix a label containing some or all of the information on the side or on the non-working surface of the sample. The information may be fixed to the block in machine-readable form. For example, this information may be provided in a scannable bar code. Other forms of storage, such as magnetic media, may also be used. Alternatively, a code affixed to the block may correlate with information about the sample stored external to the block, and the code may facilitate access to the information.

In another embodiment, the information may also include the type of stain to be used on the tissue sample and the type of representation (e.g., electronic, chemical, or physical) that are to be made. This information will primarily be used

if the automated microtome is used in conjunction with an automated staining device and/or an image capture device.

In step 156, a sample block's code may be read before the sample block is processed. In one embodiment, this may be a mandatory step. In the event a code can not be read, the processing sequence may be stopped automatically. The technician may then manually eject the sample block in question, or the system may be pre-set to automatically eject any sample blocks for which the code is in any way suspect. In another embodiment, the technician may be able to override the system and continue the process despite the sample block code error.

In step 158, the sample is loaded in a holding assembly. This may be done automatically, or it may be done manually. The holding assembly may secure the sample block with several prongs; other means of holding the sample may also be used.

In one embodiment, a robotic clamp is used as a holding assembly. The robotic clamp can move the sample through various processing stations during preparation of the thin sections for positioning on the slides. The robotic clamp may provide the ability to rotate the sample block in three dimensions, which results in the optimum orientation of the working surface of the tissue sample to the blade. In another embodiment, the robotic clamp may have the ability to rotate the block in two dimensions. The rotation may be in set increments; for example, in increments of 2 degree arcs. Other suitable increments may also be used.

In another embodiment, negative pressure (a vacuum) may be used to secure the sample. Because the sample blocks are generally of a standard size, a vacuum clamp positioned on one side of the sample block may apply negative pressure. The sample block is then secured to the vacuum clamp as long as negative pressure is applied. Any other suitable holding devices may be used.

In one or more embodiments, after the sample block is secured in the holding assembly, the information may be read into the computer.

In step 160, the position of the tissue sample within the prepared sample block that is in the holding assembly is determined. In the manual process, the general angle of the tissue sample in the sample block is determined by the technician when the paraffin wax hardens. In order to achieve the best slice of the

sample tissue, it is generally desirable to present the maximum surface area of the tissue sample to the blade. If a sample block contains multiple tissue samples, it is generally desirable to orient the sample block so that the tissue samples are all at the same approximate depth with respect to the blade.

Any device or method that determines the depth and general mount angle of the tissue sample may be used. In one embodiment, an optical imaging system is used. This may include optical scanning devices using, e.g., focused light beams or lasers. Other methods and devices for determining the location of the tissue sample, such as RF waves, sonar, radar waves, X-rays, magnetic resonance, interferometers, etc., may also be used. In one embodiment, the optical imaging system locates the position and orientation of the tissue sample in the sample block in sufficient detail to permit the system controller to determine the desired orientation of the sample relative to the blade. Once the sample is optically scanned, the resulting data may be sent to the system controller, which processes the data in order to determine the appropriate orientation of the sample block.

Additional sensors may also be provided before the sample block is presented to the blades. In one embodiment, a metal detector is provided which detects the presence of metal in the sample, which could damage the blade. If metal is detected, the device may either alert the technician, automatically stop, or both.

In step 162, portions of the oriented sample block are removed to expose the embedded tissue sample. To do this, in one embodiment, the holding assembly moves the sample block to a blade assembly. The holding assembly may then cycle over the blade assembly as many times as required to reach the depth of the tissue sample, as determined in step 160. Each time the holding assembly cycles across the blade assembly, the holding assembly may incrementally move closer to the blade, permitting the blade to cut a disposable slice. Alternately, the blade assembly may cycle over the sample block and may incrementally move closer to the tissue sample with each cycle. The sample slices acquired during this step are typically discarded, preferably to a biologically-safe holding area.

The blade of the blade assembly may be made of any material having adequate hardness to cut the sample. Typically, the blade will be made of hardened spring steel. Alternatively, a cutting wire of narrow gauge or carbon fiber may be

used, or the blade may contain diamond edges, or the blade may be made of surgical stainless steel.

Although the term "blade" is used generally to describe the component responsible for actually making the slice, it is understood that other mechanisms, devices, or components that accomplish this function could be substituted where their equivalence is readily apparent to one of ordinary skill. For example, cutting wires fall within the meaning of the term "blade" as used herein.

The blade may be continuous or discontinuous. In one embodiment, a continuous blade is supplied in a blade supply canister, incrementally advanced during the operation, and stored on a blade take-up canister. The continuous blade may be continuous roll of any suitable blade material. The blade assembly may be driven by a blade supply motor.

The blade may be advanced at predetermined intervals, such as the number of slices the particular section of blade has made. In another embodiment, the blade may advance when the sample block is changed. Other suitable criteria may also be use in order to ensure that the blade produces histologic grade slices. The blade may be incrementally advanced automatically, or it may be done manually by the technician.

Blade stock is accordingly incrementally rewound on spindles in the blade take-up canister. When the blade stock runs out, the empty blade supply canister is replaced with a fresh blade supply canister, and the used blade is discarded.

In one embodiment, two or more blade assemblies may be provided. The first blade assembly may be used to make the initial "rough" slices to expose the tissue sample, and a second blade assembly may be provided make the actual histologic grade slice or section. Providing at least two blade assemblies reduces the overall wear on the blade that makes the histologic grade slice by reducing the number of slices that it is required to make. This increases the overall life of the blade and reduces the downtime for blade replacement. Additional blade assemblies may be provided as necessary, and the blades may be of similar or different materials.

In an alternate embodiment, steps 160 and 162 may be performed simultaneously. In this embodiment, the slices that are removed from the sample block and monitored by a sensor. Slices are removed until the sensor determines that a sufficient cross-sectional area of the tissue sample is included in each slice. After this determination is made, histologic grade slices are then produced.

In step 164, histologic grade slices are produced from sample blocks that have been brought to the desired depth for producing histologic grade slices. In one embodiment, where multiple blade assemblies are provided, the holding assembly advances the sample block toward the final blade by a predetermined amount after each cycle, and a given or pre-set number of histologic grade slices are automatically taken from the sample block's working surface.

In step 166, the histologic grade slice taken from the sample block is then applied directly to a transfer roller mechanism. At least one transfer roller for "picking up" the histologic grade slice and transferring it to a slide is provided. The purpose of the transfer roller mechanism is to capture histologic grade slices from the blade assembly and convey them to slides while reorienting the slices. In a preferred embodiment, the slices are reoriented from a generally vertical position to a generally horizontal orientation. In the process, the slices are softened so that they flatten and then smoothly transfer to the slide. One of the functions of the transfer roller mechanism, therefore, is to simulate the effect of the warm water bath on a given sample slice. An attractive force, such as negative pressure (a vacuum), may be used to help capture the slices, and a repulsive force, such as positive pressure, may be used to help release sample slices from the transfer roller mechanism. Other forms of force, such as electrical, magnetic, electrostatic, and chemical forces, may be used to aid in creating the attractive or repulsive force between the slice and the surface of the transfer roller.

In one embodiment, the transfer roller mechanism includes two transfer rollers. Such an embodiment is shown in **Fig. 2**. First transfer roller 210, which is located near blade assembly 205, responsible for producing histologic grade slices, secures and takes control of a histologic grade slice (not shown) from sample block 200 as soon as that histologic grade slice begins to leave blade assembly 205. To do this, the rotational speed of first transfer roller 210 may be set

to match the linear motion of the holding assembly 240 relative to blade assembly 205. Further, as discussed above, the transfer rollers can either generate an attractive force or can generate a repulsive force over a portion of their cylindrical surface, or over their entire cylindrical surface. This may depend upon the stage of rotation of the transfer roller. The application of an attractive force, which may be in the form of negative pressure, aids in picking up each histologic grade slice from blade assembly 205, and also aids in spreading the slice smoothly in its longitudinal dimension. Finally, a repulsive force, which may be in the form of positive air pressure, can assist in the release, or transfer, of the histologic grade slice onto a subsequent transfer roller or onto slide 250.

Additional transfer rollers may be provided as necessary.

The surface of the transfer rollers may also be temperature controlled, including being heated or cooled. This temperature may vary depending on the support medium that surrounds the sample. In one embodiment, the surface of the transfer rollers are temperature controlled to a temperature sufficient to induce flattening of the support medium and tissue section. This temperature may be, for example, about 98°F.

Further, the transfer rollers may be coated with a non-stick material, such as titanium, urethane, Teflon®, nylon, or other suitable material. The surface of the transfer rollers may be porous, facilitating the adhesion, flattening, and release of the sample slice through the application of negative and positive pressure.

In an alternative embodiment, the sample slice is floated on a water surface as part of the process for smoothing the slice and transferring it to a slide. The slice may be received by the water surface directly from the blade and then picked up from the water by a transfer roller, or the transfer roller which receives the slice cut from the sample may place the slice onto the surface of the water. In either case, attractive and repulsive forces may assist as described above.

Referring again to **Fig. 1**, in step 168, the histologic grade slice is transferred to a suitable receiving medium, which may be a slide. The receiving medium will typically have at least one planar surface. In one embodiment, slides are fed from a slide dispenser and are printed to correspond to a given sample block and the number of slide samples required of that sample block. Once printed, the

slides are advanced to the second transfer roller. In one embodiment, the slide is moved on a slide conveyor, which holds each slide independently of any other slide and in the process, cycles slides under the second transfer roller. The linear motion of the slide conveyor is timed to match the rotational speed of the second transfer roller, which, as discussed above, is also adjusted to match the rotational speed of the first transfer roller.

Minor adjustments to the slide may be made automatically as the slide approaches the final transfer roller. This may include automatic adjustments to the speed, positioning, and orientation of the slide, so that the histologic grade slice may be properly positioned on the slide. Additional sensors, including an optical imaging system, may be provided to determine the location of the sample slice relative to a slide and this information may be used to adjust the slide position. In another embodiment, manual adjustments may also be made by the technician.

In another embodiment, the slice may be secured in film or tape as the receiving medium. Suitable tape is disclosed in U.S. Patent No. 5,746,855, which is hereby incorporated by reference in its entirety. In this embodiment, the sample may be transferred from the first or second transfer roller to the tape in a similar fashion as described above.

Prior to passing under the final transfer roller, the slide may be misted with a fluid medium, such as distilled water. This misting wets the mounting surface of the slide to enhance the surface tension proprieties of both the slide and the histologic grade slice, forming a fluid bond between the surface of the slide and the surface of the histologic grade slice. Other fluids may be misted on the surface of the slide. Generally, these fluids will have surface tension properties that permit a tissue slice in the support medium to adhere and spread on the surface of a slide without wrinkling, stretching, or tearing. The fluid will be selected from a group of fluids that will neither dissolve the tissue support medium nor the slide, nor will perceptibly distort the tissue slice or slide. In an alternate embodiment, the surface of the histologic grade slice that will be in contact with the surface of the slide may be misted with a medium as described above.

In addition, the slide may be coded with information regarding the tissue sample. This information may include the information entered by the

technician during the preparation of the sample block, and may further include information regarding the sample slice sequence where several sample slices are taken (e.g., "slice 7 of 20"). This information may be bar coded, and may be printed on the slide directly, or printed on a label and then affixed to the slide. Where the receiving medium is a tape, the information may be printed or affixed to the tape an analogous fashion.

As the final transfer roller begins to interface with a slide, a repulsive force, such as controlled positive air pressure, may assist in the release of the histologic grade slice sample from the transfer roller onto the wet surface of the slide. The histologic grade slice adheres to the slide and moves beyond the transfer roller. Following the transfer of the histologic grade slice to the slide, a pressure roller may be provided to apply light pressure to the sample on the slide to further flatten the histologic grade slice and to promote adhesion to the slide surface.

In optional step 170, any support medium that overhangs the slide may be removed. The slides may pass through the stripper assembly, which may have stripper fins that shift into contact with a slide, where a descending vertical motion against the edges the slide strips away, or trims, the support medium excess, with the excess being removed and automatically disposed of.

In step 172, the slides are discharged from the device. The slides then exit the device and may be either manually picked-up as they exit or an accumulating extension can be added to the exit conveyor to increase capacity. In one embodiment, the slides advance to the end of the slide conveyor and are then stacked 90 degrees incrementally onto the slide accumulation conveyor.

The finished slides may be conveyed to any other type of unit, such as a dryer, a stainer, image capture device or any other analytic device. The slide accumulation conveyor may have a final code scanner which checks the slide code sequence and automatically matches it with the sample block order of process and records it as complete.

Optionally, the technician may have the ability to manually over-ride the cycle of the slide accumulation conveyor. This ability will be useful at the end of a processing run where the technician wants to unload finished slides from the

accumulation exit conveyor when there are no subsequent sample blocks to be processed.

In step 174, the sample block is released by the holding assembly. In one embodiment, the holding assembly moves the sample block to the discharge chute. The discharge chute can maintain the sample blocks in the order in which they were processed. The technician may be able to release the sample blocks by pressing a lever, or they may be automatically returned to a holding area. The sample block chute optionally provides a biologically-safe and convenient means of disposal. The sample blocks may be released into a collecting device, which may be later retrieved by personnel for proper disposal.

In another embodiment, the sample blocks may be transferred to a holding device for storage. This may include devices, such as trays, that may be indexed and stored, either on-site or off-site. The devices may be labeled by the automated histology device with a text, an alphanumeric code, a bar code, or another machine-readable code designating the contents of the storage device and other associated information. The devices may also be prelabled with such a code. The holding assembly may release the sample block directly onto the holding device, or the holding assembly may release the sample block to another mechanism that positions the sample block in a holding device. In one embodiment, a scanner may be provided for identifying the holding device, such as by reading a bar code. The holding device and sample block may then be correlated so that the sample block may be later retrieved, in a manner that is known in the art.

After being released from the automated microtome, in step 176, the slides may be transferred to an automated staining device. Automated staining devices are known in the art, and provide the slides with the appropriate stain. An example of a suitable automated staining device is disclosed in U.S. Patent No. 5,948,359, the disclosure of which is incorporated by reference in its entirety. Other staining devices, both manual and automated, may also be used. Staining may include hematoxylin and eosin or other routine histochemical stains. Alternatively, staining may identify the presence of or may quantitate specific molecules by immunochemical means such as immunohistochemistry, or by *in situ* hybridization of suitable nucleic acid probes. Under some circumstances, staining may be

generated electronically by interrogation of the sample by physical methods such as fluorescence, birefringence, interference, nuclear magnetic resonance, electron spin resonance, x-ray diffraction, ultraviolet microscopy, visible light microscopy, infrared microscopy, electron microscopy, and confocal microscopy, alone or in combination. In step 178, after staining, the slides may be dried, and provided with a coverslip.

In step 180, the slides may then be transferred to an image capture device in order to obtain a representation of the tissue sample. As discussed above, this may be accomplished with a common transfer mechanism between devices, such as a conveyor belt, or the slides may be manually or automatically moved between devices using an intermediate storage device. The image capture device may be part of the automated microtome, or it may be used separately for previously produced slides, or for slides that are not produced by the automated microtome. In one embodiment, the image capture device may comprise an optical device, such as a microscope, coupled to a digital recording device that will scan the entire histologic section and capture an electronic representation of the histologic section. The resolution of the representation should most preferably approximate that obtained with a standard 400x light microscope as is commonly used in histopathology, but may vary from 200x to 1500x. The image may then be displayed at magnifications ranging from 20x to the maximum magnification permitted by the resolution as is commonly practiced in the art. All areas of the captured representation may then be reviewed at the desired magnification. Alternatively, a representation of the histologic section may be obtained by fluorescence, birefringence, interference, nuclear magnetic resonance, electron spin resonance, x-ray diffraction, ultraviolet microscopy, visible light microscopy, infrared microscopy, electron microscopy, and confocal microscopy, alone or in combination. The captured representation is preferably maintained in electronic or electromagnetic form, but may be maintained in a physical form such as a film or photographic image.

The captured representation may be viewed locally or at a remote site either contemporaneously with its acquisition, or at a future time. The representation may be transmitted to a remote site, most preferably in digital form,

such as over the Internet, but may also be transmitted by analog means via any system capable of transmission. The representation may be transmitted as a complete image or may be transmitted incrementally in whole or in part, such as by streaming video technology. Under some circumstances, the representation may be transmitted in compressed format and reconstituted for viewing. Portions of the representation may be pre-selected for review by analytic technology such as analytic software, or may be designated for review by an observer at either the local or the remote site.

In one embodiment, the histologic section and its representation may be definitively correlated at all times with information designating its origin and other necessary parameters. Such definitive correlation can be maintained by electronic or physical means, alone or in combination. An example of such correlation would consist of a bar code on the tissue block that represents a unique identifier. The bar code may be read automatically or manually at one or more convenient points in processing, and the unique identifier would be correlated at all times with the resultant histologic sections and their representations. The unique identifier may optionally contain control information designating the number and spacing of histologic sections and/or their representations, the type of staining to be performed, or other processing conditions.

A preferred embodiment of the automated microtome of the present invention is shown in **Figs. 3-5**. System 300 is a preferred embodiment only, and the present invention is not limited to this preferred embodiment. The arrangement of elements of the system in **Figs. 3-5** in no way limits the present invention. It is within the contemplation of the present invention to arrange or modify elements of the system in accordance with other design requirements, such as, inter alia, the amount of space available to accomplish the method of this invention.

Referring to **Figs. 3** and **4**, System 300 includes sample block loading area 302 and sample block identification area 304. In sample block loading area 302, sample blocks may be manually or automatically placed into a sample block dispenser (not shown). In the embodiment shown, the sample blocks are placed in sample block dispenser (not shown) such that their working surfaces are oriented downward. Sample block dispenser (not shown) may be positioned over a conveyor

assembly for transferring the sample blocks to sample block identification area 304. As each sample block is added to the in-feed conveyor, its identification information is manually entered and stored in system controller 316, or the information may be automatically entered into the system controller by an optical scanner (not shown) that scans a pre-placed code on the sample block's plastic housing. This information may include, inter alia, patient's name, type of sample (i.e., what organ the sample came from), the number of slides that are to be made, clinical diagnosis, or any other relevant information.

System controller 316 may be any suitable microprocessor-based controller. In one embodiment, an Xpert 8 series computer, manufactured by Siemens AG, München, Germany, may be used as the controller. In another embodiment, a Scenic series computer, also manufactured by Siemens AG, may be used. In still another embodiment, a Pentium™-series microprocessor, manufactured by Intel, Inc., may be used.

The sample block code information may be displayed on display screen 330. Display screen 330 may be any suitable display means, including flat-panel displays, CRTs, LCD displays, and touch-screens. In one embodiment, a touch-screen is used to display information and to simultaneously serve as an input means. Other input means, such as keyboards, keypads, etc., may also be used. In one embodiment, SICOMP IMP100, manufactured by Siemens AG, München, Germany, is used as a touch-screen display. Other suitable displays, including the MCM-series monitor, also available from Siemens AG, and other input means may also be used.

In one embodiment, display screen 330 may be used to display the progress of a particular sample block. Once the sample block is scanned, display screen 330 may present an image of the embedded tissue sample for the technician to view. This image may be presented in a perspective view, and the technician may be able to rotate the image. The intended depth of the slices may also be displayed.

Display screen 330 preferably also allows the technician to modify system parameters. For instance, the technician may have the ability to modify the temperature of either or both transfer rollers, the speed of the various conveyors, the oscillation speed and distance of the holding mechanism during slicing, etc.

Sample blocks may or may not include their own identification code. However, it is preferred that by the time a given sample block reaches the first processing station, its identification information and the sequence in which it was placed on the conveyor is registered in system controller 316. This information identifies products (slides), matches sequence number of the sample with codes related to the sample, and drives slide printer 328, which may be an ink jet printer, to print sample-related information on the slides. Thus, in the preferred embodiment, before the processing is initiated, system controller 316 matches the sequence number of the sample block about to undergo processing with the expected sample block's registered identification information.

After suitable identification of the sample block, the sample block is transferred to a first processing station. In the embodiment shown, the sample blocks are transferred by lug conveyor, which facilitates positive identification of the sample blocks.

At the first processing station, the sample blocks are secured by the holding assembly. In one embodiment, robotic clamp assembly 350 is used to secure the sample block. Robotic clamp assembly 350 may include traditional clamps, or may include vacuum clamps.

Robotic clamp 350 captures the leading sample block in queue. In one embodiment, robotic clamp 350 takes control of the sample block by grasping the length dimension sides of its plastic holder and moves it to a second processing station where it is scanned for tissue sample coordinates. In another embodiment, robotic clamp 350 uses negative pressure to secure the sample block.

Following clamping, the location of the tissue sample within the paraffin block is determined by optical imaging system 348. Optical imaging system 348 pinpoints the depth and general mount angle of the tissue sample within the paraffin block portion of the sample block. Once the position of the tissue sample is established and entered into the system controller 316, robotic clamp 350 adjusts the paraffin block's working surface relative to blades at the next processing station to level the tissue sample and formulate its depth from the working surface of the surface of the paraffin block.

In a preferred embodiment, the robotic clamp assembly has the ability to automatically adjust its position (and thereby the position of the sample block) to present the best orientation of paraffin block working surface to both of the blade assemblies further on in the process. In this process, target coordinates which identify the center of the tissue sample relative to the plane of the paraffin block's working surface are obtained based upon the located position of the tissue sample.

After determination of the location of the tissue sample at the second processing station, the sample block is moved to blade assemblies for cutting. In the embodiment shown, two blade assemblies for cutting into the sample block are provided: first blade assembly 346 for rough cutting to remove unwanted material from the tissue block; and second blade assembly 342 to produce histologic grade slices. Blades to cut the sample block are provided at each of these blade assemblies 346 and 342 by blade supply canisters 306 and 310, respectively. In the embodiment, blades (not shown) are several hundred inches long and are fed from the same type of canister and wound on the same type spindle. Blades (not shown) may be guided across their cutting assembly surfaces by a series of guide rollers (not shown).

The blades of first blade assembly 346 and second blade assembly 342 are each stored within the respective blade supply canisters, 306 and 310. The blade may be continuous roll of blade material. Further, both blade assemblies 346 and 342 may be driven by blade supply motor 308. A blade take-up canister may be provided for each blade supply canister 306 and 310 to received the used blade.

The blades may be any suitable cutting material. In one embodiment, hardened spring steel is used as a blade. Other blade materials, including carbon fiber, diamond edged strip, or surgical stainless steel, may alternatively be fed from blade supply canister 306 or 310 and wound into the respective take-up canister.

The blades of both first and second blade assemblies 346 and 342 may be incrementally advanced at predetermined intervals, as discussed above. For example, the blade may be advanced for each new sample block, or it may be advanced after a predetermined number of slices. In one embodiment, as soon as a sample block is sliced to tissue depth by first blade assembly 346, the blade in first blade assembly 346 may advance, and accordingly, as soon as histologic grade slices

are produced at second blade assembly 342, the blade in second blade assembly 342 may also advance.

Blade stock is accordingly incrementally rewound on spindles in the blade take-up canisters (not shown). When either blade runs out, the empty blade supply canister is replaced with a fresh blade supply canister. The used blade is discarded. The blade canisters may be replacement items, with empty canisters being refilled and spindles also being reusable. The blade canister system provides for the easy disposal of medical waste. For instance, once the used blade is wound on the blade take-up canister, the blade take-up canister can be autoclaved and then discarded in the normal trash.

In another embodiment, standard fixed blades of a suitable material may be used. These materials may include the same materials used for the continuous blade. These fixed blades may be replaced automatically, or they may be replaced manually by the technician.

When the sample block is moved to first blade assembly 346, the angle of robotic clamp assembly 350 is automatically adjusted (guided by the input of the tissue sample coordinates) relative to first blade assembly 346. In one embodiment, robotic clamp 350 moves the sample block past first blade assembly 346 to cut the sample block. An equivalent mechanism in which first blade assembly 346 moves past a stationary sample block is also within the contemplation of this invention, as are embodiments where both first blade assembly 346 and sample block move in a coordinated fashion. Robotic clamp 350 may cycle, moving across first blade assembly 346 to cut successive slices from the sample block until the tissue sample is exposed and ready to yield useable histologic grade slices. Sample slices produced by these cycles fall onto accumulation exit conveyor 312 and are transported into paraffin scrap bin 314 for temporary storage and disposal.

Once the surface of the sample block has been cut to a desired depth for producing histologic grade slices in preparation for slicing, robotic clamp 350 is driven a pre-set distance to move the sample block to second blade assembly 342. Robotic clamp assembly 350 then automatically orientates to the same coordinates for a given sample block and moves to a position adjacent to blade assembly 342

where a given number of histologic grade slices are automatically taken from the paraffin block's working surface.

System controller 316 retains the information that enables the continuity of the slicing operation from first blade assembly 346 to second blade assembly 342. The difference is that slices taken at first blade assembly 346 are discarded into paraffin scrap bin 314, while slices taken at second blade assembly 342 are applied directly to first transfer roller 502 of transfer roller mechanism 344.

Transfer roller mechanism 344 is further shown in **Fig. 5**. First transfer roller 502 is positioned tangent to and above second transfer roller 504. Both first and second transfer rollers 502 and 504 may be coated with titanium, urethane, or other materials. Further, the surfaces of transfer rollers 502 and 504 may be coated with a porous material. As discussed above, both first and second transfer rollers 502 and 504 may have the ability to generate attractive and repulsive forces between the surface of the transfer roller and the slice, and may do this independently of each other and over all or a portion of the surface of each roller at any given time or position of rotation.

First transfer roller 502 is positioned directly below second blade assembly 342. First transfer roller 502 begins to pick-up and take control of a given histologic grade slice as soon as that slice begins to leave second blade 342. The rotational speed of first transfer roller 502 is timed to match the linear motion of robotic clamp 350 relative to second blade assembly 342.

First and second transfer rollers 502 and 504 are part of the mechanism that replicates the action of the technician's hand in pulling the histologic grade slice away from the blade and placing it in the water bath. First and second transfer rollers 502 and 504 replace the functions of moving histologic grade slices from the edge of the blade to the water bath and then from the water bath onto the empty slide.

Second transfer roller 504 is positioned tangent to and below transfer roller 502. The purpose of second transfer roller 504 is to be the interface between first transfer roller 502 and the slides. In the process, the tissue sample is inverted, further smoothed, located and applied to a corresponding slide.

Slide 514, or other suitable receiving medium, is fed from slide dispenser 332 and is printed to correspond to a given sample block and the number of slide samples required of that sample block. Once printed, slides are incrementally advanced on slide conveyor 406 which holds each slide independently of any other slide, and in the process, cycles coded slides under second transfer roller 504. The linear motion of slide conveyor 406 is timed to match the rotational speed of second transfer roller 504, which in turn may be automatically adjustable to match the rotational speed of first transfer roller 502. In another embodiment, the speed of second transfer roller 504 may be adjusted manually. As second transfer roller 504 begins its interface with slide 514, a repulsive force, which may be in the form of controlled positive pressure, aids the release of the tissue sample from second transfer roller 504 to slide 514's surface.

Referring again to **Fig. 3**, sprayer head 336, sprayer pump 320 and spray tank 324 are provided to mist the incoming slide with distilled water, or any other suitable material, to enhance the bonding between the histologic grade slice and slide 514.

Optionally, an optical scanner (not shown) focused on second transfer roller 504 verifies the location of the tissue sample by measuring its calibrated transverse and circumference center point coordinate sites. This information is input to system controller 316 to transversely adjust the entry of slide 514 relative to second transfer roller 504 and then control the timed release of the sample slice to slide 514. Second transfer roller 504 delivers the sample slice to slide 514. An exhaust of low pressure filtered air may assist in this transition. The transition position of slide 514 is controlled and based on the predetermined location of the center of the tissue sample on first transfer roller 502 and/or second transfer roller 504. Preferably, only one sample slice is on any of the transfer rollers at any given time, with the exception that for a transfer roller assembly with more than two rollers, a subsequent slice can begin to be applied to first transfer roller 502 at the same time as the slice on second transfer roller 504 is being applied to its slide.

Slide dispenser 332 may be located on the front side of system 300. Slides (not shown) may be manually loaded into slide dispenser 332. Slide dispenser 332 may be a vertical canister mounted directly over slide conveyor 406.

Slide dispenser 332 releases one slide (not shown) for each cutting cycle. The release may be managed by system controller 316 and may be triggered by an optical scanner provided in sample block identification area 304 that reads the code on an incoming sample blocks.

In one embodiment, slide dispenser 332 may be provided with a sensor (not shown) for sensing when slide dispenser 332 is running low on slides. This sensor may cause a warning light or other suitable indictor to allow the technician to replenish the slides. If the slide dispenser 332 runs out of slides, system 300 may automatically stop operation.

In another embodiment, other suitable receiving media may be used in place of the slides, such as plastic or film, as discussed above. Typically, the receiving medium will have at least one planar surface.

Slide dispenser 332 may operate as follows. Slide dispenser 332 automatically feeds individual slides for labeling. When system 300 is ready to process a given sample block, the corresponding slides will be sequentially labeled with some or all of the information associated with the respective sample block. System 300 will track each sample block and corresponding slide or slides as they progress.

Activation of slide dispenser 332 may be automatic after a given sample block code is read and entered, or it may be under the manual control of the technician. The number of slides prepared for a given sample block may be determined from an item in the sample block code or it may be manually entered or altered by an technician.

After a tissue sample is applied to the surface of a slide, the slides advance to the end of slide conveyor 406 and may be indexed 90 degrees incrementally onto the slide accumulation conveyor. The slides index based on the ongoing process cycle where each time a process is finished and tissue sample from second transfer roller 504 applied to the surface of a corresponding slide, the accumulation exit conveyor indexes once. The finished slides can be manually picked up as they exit or an accumulating extension can be added to the exit conveyor to increase capacity or they can be conveyed to any other type of unit --

for example, a dryer, an automated staining unit, an image capture device, an intermediate storage device, etc.

The slide accumulation conveyor may have a final code scanner (not shown) which checks the slide code sequence and automatically matches it with the sample block order of process and records it as complete. The technician may have the ability to manually override the cycle of the slide accumulation conveyor.

Sample block exit chute 318 is provided for the sample block to be released into when the requested or requisite number of histologic grade slices have been achieved. The sample block is released into exit chute 318 in the sequence in which they are processed.

As discussed above, in another embodiment, the sample block may be released to a holding device (not shown) for processing, which may include indexing and storing the sample blocks and labeling the storage device. This may further include a device, such as a scanner, for receiving an identification of the holding device, so that the holding device and the sample block may be correlated. Suitable identification information may be automatically printed or affixed to the holding device, or the holding device may be prelabled with identification information.

As discussed in the background, microtomes generally operate with a vertical orientation. That is, once the sample block is locked into the microtome's clamp and orientated by the technician to achieve the best working surface orientation, the slicing process (sample block relative to razor blade) is vertical. The present invention, however, may operate with the sample block having either a vertical or a horizontal orientation. Having a horizontal orientation yields several benefits, including the fact that sample blocks may enter system 300 in exactly the same way as for the vertical version. However, once within the clamping series they are be shifted horizontally with the sample block's working surface oriented in a vertical direction. The slicing to depth and subsequent slices of the actual samples would also be horizontal with the sample block below and parallel to the blade assembly above.

With a horizontal orientation, the transfer roller mechanism will not need to reorientate the sample slices from a generally vertical to a horizontal plane.

Their purpose is solely to move the sample slice from the sample block's working surface in a horizontal plane directly onto a slide. This contrasts to the vertical orientation, where the transfer roller mechanism must also reorient the sample slice from a vertical orientation to a horizontal orientation for the slide.

In some embodiments, automated or manual staining and/or coverslipping processes (not shown), such as those that are known in the pathologic arts, may be interposed between the automated device for histologic sectioning and the image capture device. Staining may include hematoxylin and eosin or other routine histochemical stains. Alternatively, staining may identify the presence of or may quantitate specific molecules by immunochemical means such as immunohistochemistry, or by *in situ* hybridization of suitable nucleic acid probes. Under some circumstances, staining may be generated electronically by interrogation of the sample by physical methods such as fluorescence, birefringence, interference, nuclear magnetic resonance, electron spin resonance, x-ray diffraction, ultraviolet microscopy, visible light microscopy, infrared microscopy, electron microscopy, and confocal microscopy, alone or in combination.

Histologic sections on slides or other suitable carriers may be collected and stored and indexed at any time during the process, in particular before or after the acquisition of a representation. Stored histologic sections may be selected at any time for review, image acquisition, processing or repeat processing, or staining by any means described above. Representations of stored histologic sections may be archived, reviewed, or transmitted as desired.

Image capture device (not shown) may be provided for capturing a representation of the sample slice. The image capture device may be part of the automated microtome, or it may be used separately for previously produced slides, or for slides that are not produced by the automated microtome. In one embodiment, the image capture device may comprise an optical device, such as a microscope, coupled to a digital recording device that will scan the entire histologic section and capture an electronic representation of the histologic section. The resolution of the representation should most preferably approximate that obtained with a standard 400x light microscope as is commonly used in histopathology, but may vary from 200x to 1500x. The image may then be displayed at magnifications ranging from

20x to the maximum magnification permitted by the resolution as is commonly practiced in the art. All areas of the captured representation may then be reviewed at the desired magnification. Alternatively, a representation of the histologic section may be obtained by fluorescence, birefringence, interference, nuclear magnetic resonance, electron spin resonance, x-ray diffraction, ultraviolet microscopy, visible light microscopy, infrared microscopy, electron microscopy, and confocal microscopy, alone or in combination. The captured representation is preferably maintained in electronic or electromagnetic form, but may be maintained in a physical form such as a film or photographic image.

The captured representation may be viewed locally or at a remote site either contemporaneously with its acquisition, or at a future time. The representation may be transmitted to a remote site, most preferably in digital form, such as over the Internet, but may also be transmitted by analog means via any system capable of transmission. The representation may be transmitted as a complete image or may be transmitted incrementally in whole or in part, such as by streaming video technology. Under some circumstances, the representation may be transmitted in compressed format and reconstituted for viewing. Portions of the representation may be pre-selected for review by analytic technology such as analytic software, or may be designated for review by an observer at either the local or the remote site.

In one embodiment, the histologic section and its representation may be definitively correlated at all times with information designating its origin and other necessary parameters. Such definitive correlation can be maintained by electronic or physical means, alone or in combination. An example of such correlation would consist of a bar code on the tissue block that represents a unique identifier. The bar code would be read automatically or manually at a convenient point in processing, and the unique identifier would be correlated at all times with the resultant histologic sections and their representations. The unique identifier may optionally contain control information designating the number and spacing of histologic sections and/or their representations, the type of staining to be performed, or other processing conditions.

While the invention has been described in connection with preferred embodiments and examples, it will be understood by those skilled in the art that other variations and modifications of the preferred embodiments described above may be made without departing from the scope of the invention. Other embodiments will be apparent to those skilled in the art from a consideration of the specification or practice of the invention disclosed herein. It is intended that the specification is considered as exemplary only, with the true scope and spirit of the invention being indicated by the following claims.

CLAIMS

What is claimed is:

1. An automated method of producing slices from an embedded sample, comprising:

locating a sample embedded within a support medium;

orienting said embedded sample such that a working surface is presented;

removing a slice of said sample from said embedded sample; and

transferring said slice to a receiving medium.

2. The method of claim 1, wherein said step of locating a sample embedded within a support medium comprises automatically determining an orientation and a depth of said sample within said support medium.

3. The method of claim 2, wherein said determination is achieved by an optical sensor.

4. The method of claim 2, wherein said determination is achieved by a laser.

5. The method of claim 1, wherein said sample is a biological sample.

6. The method of claim 5, wherein said slice that is transferred to a receiving medium is a histologic grade slice.

7. The method of claim 1, wherein said receiving medium is a slide.

8. The method of claim 1, wherein said step of orienting said embedded sample such that a working surface is presented comprises:

maximizing a surface area of said sample that is presented to a cutting surface; and

manipulating said embedded sample to present said maximized working surface to said cutting surface.

9. The method of claim 1, further comprising the step of slicing one or more times to expose said embedded sample prior to said step of removing a slice from said sample from said embedded sample and transferring said slice to a receiving medium.

10. The method of claim 1, further comprising the step of incrementally advancing a continuous blade of a blade assembly from a blade supply canister to a blade take-up canister at predetermined intervals.

11. The method of claim 1, further comprising the step of staining the slice on the receiving medium.

12. The method of claim 1, further comprising the step of capturing a representation of the slice.

13. An apparatus for applying thin sections of a tissue sample to a receiving medium comprising:

blade assembly for slicing thin sections from a tissue sample;

a plurality of transfer rollers sequentially arranged in tangential proximity to each other, such that a thin section on the surface of one transfer roller will be transferred to the surface of the sequentially successive transfer roller;

wherein a first sequential transfer roller of said plurality of transfer rollers is oriented in proximity to said slicing means so that a thin section sliced from said tissue sample will contact the surface of said first sequential transfer roller; and

a receiving medium disposed in tangential proximity to a final sequential transfer roller of said plurality so that a thin section on the surface of said final sequential transfer roller will be transferred to said receiving medium in a substantially smooth and flat configuration.

14. The apparatus of claim 13, wherein at least a portion of a circumference of one or more of said plurality of transfer rollers is covered with a porous material.

15. The apparatus of claim 13, wherein at least a portion of a circumference of one or more of said plurality of transfer rollers produces attractive and repulsive force on said thin section.

16. The apparatus of claim 13, wherein at least a portion of a circumference of one or more of said plurality of transfer rollers is temperature controlled.

17. The apparatus of claim 13, wherein said slicing means comprises:

a first blade assembly for slicing said tissue sample to expose a working surface; and

a second blade assembly for producing said thin sections.

18. The apparatus of claim 17, wherein one or more of said first and second blade assemblies comprises:

a blade supply canister for providing a continuous blade of a predetermined length; and

a blade take-up canister for receiving said continuous blade;

wherein said continuous blade is advanced from said blade supply canister to said blade take-up canister at predetermined intervals.

19. The apparatus of claim 13, further comprising:

an optical sensor for automatically determining an orientation of said tissue sample.

20. The apparatus of claim 19, further comprising:

a holding assembly for manipulating said tissue sample in response to said orientation determination.

21. The apparatus of claim 13, further comprising a display means for displaying operating information to a technician.

22. The apparatus of claim 13, further comprising a staining device for staining the thin surface.

23. The apparatus of claim 13, further comprising an image capture device for capturing a representation of the thin surface.

24. The apparatus of claim 23, wherein the image capture device comprises a microscope.

25. The apparatus of claim 23, wherein the image capture device captures a representation obtained by a means selected from the group consisting of fluorescence, birefringence, interference, nuclear magnetic resonance, electron spin resonance, x-ray diffraction, ultraviolet microscopy, visible light microscopy, infrared microscopy, electron microscopy, confocal microscopy, and combinations thereof.

26. The apparatus of claim 23, further comprising storage means for storing the representation.

27. The apparatus of claim 23, further comprising transmitting means for transmitting the representation to a remote location.

28. A method for applying thin sections of a tissue sample secured in a sample block to a receiving medium comprising:

slicing a thin section from a sample block, said slicing causing the thin section to peel from the sample and adhere to a first transfer roller;

transferring said thin section from said first transfer roller to an adjacent transfer roller in tangential proximity to said first transfer roller; and

subsequently transferring said thin section from a final transfer roller to a receiving medium in tangential proximity to said final transfer roller;

whereby said thin section is placed on said receiving medium in a substantially smooth and flat configuration.

29. The method of claim 28, wherein said adjacent transfer roller and said final transfer rollers are not the same transfer roller.

30. The method of claim 28, wherein said step of slicing a thin section from a tissue sample comprises:

securing said sample block;

determining a location of said tissue sample in the sample block;

manipulating said sample block to a desired orientation;

slicing said sample block to a desired depth; and

slicing thin sections of said sample block.

31. The method of claim 28, wherein said step of transferring said thin section from a first transfer roller to an adjacent transfer roller in tangential proximity to said first transfer roller comprises:

generating an attractive force on said thin section from said first transfer roller to secure said thin section;

generating a repulsive force on said thin section from said first transfer roller to release said thin section to said adjacent transfer roller; and

generating an attractive force on said thin section from said adjacent transfer roller to secure said thin section.

32. The method of claim 28, wherein said thin section is warmed by one or more of said transfer rollers to assist in forming a substantially smooth and flat configuration for said thin section.

33. The method of claim 28, wherein said step of subsequently transferring said thin section from a final transfer roller to a receiving medium in tangential proximity to said final transfer roller comprises:

generating a repulsive force on said thin section from said second transfer roller to release said thin section to said receiving medium.

34 The method of claim 28, wherein said receiving medium is misted with a medium before said thin section is placed onto said receiving medium.

35. An apparatus for automatically producing tissue slides from a tissue sample within a sample block comprising:

a holding assembly for manipulating said sample block;

a blade assembly for preparing a thin section from said sample block;

a transfer roller mechanism for transferring said thin section to a receiving medium; and

a controller.

36. The apparatus of claim 35, wherein said blade assembly further comprises:

a preliminary blade assembly for removing slices from said sample block to a desired depth prior to the preparation of thin sections.

37. The apparatus of claim 35, wherein said controller tracks said sample block.

38. The apparatus of claim 35, further comprising:

an optical imaging system for locating said tissue sample within said sample block;

wherein said controller determines an optimum orientation of said sample block with respect to said blade assembly.

39. The apparatus of claim 35, wherein said transfer roller mechanism comprises:

a first transfer roller positioned adjacent said blade assembly for receiving said thin section from said blade assembly; and

a second transfer roller for receiving said thin section from said first transfer roller and transferring said thin section to said receiving medium.

40. The apparatus of claim 39, wherein at least a portion of a circumference of one or more of said transfer rollers is covered with a porous material.

41. The apparatus of claim 39, wherein at least a portion of a circumference of one or more of said transfer rollers is temperature controlled.

42. The apparatus of claim 39, wherein at least a portion of a circumference of one or more of said transfer rollers produces attractive and repulsive force on said thin section.

43. The apparatus of claim 35, wherein said blade assembly comprises:

a blade supply canister for providing a continuous blade of a predetermined length; and

a blade take-up canister for receiving said continuous blade;

wherein said continuous blade is advanced from said blade supply canister to said blade take-up canister at predetermined intervals.

44. A system for automatically producing tissue samples, comprising:

a microtome for producing a tissue sample;

a staining device for selectively staining the tissue sample; and

an image capture device for capturing a representation of the tissue sample.

45. A method for preparing and storing tissue sample, comprising:

securing a sample block, the sample block comprising a tissue sample;

identifying the sample block;

preparing a sample slice from the sample block;

identifying a holding device;

transferring the sample block to the holding device; and

correlating the identification of the sample block and the holding device.

46. The method of claim 45, wherein the holding device is a tray.

47. The method of claim 45, wherein the step of identifying a holding device comprises reading a bar code on the holding device.

48. The method of claim 45, wherein the holding device holds a plurality of sample blocks.

49. The method of claim 45, further comprising storing the holding device.

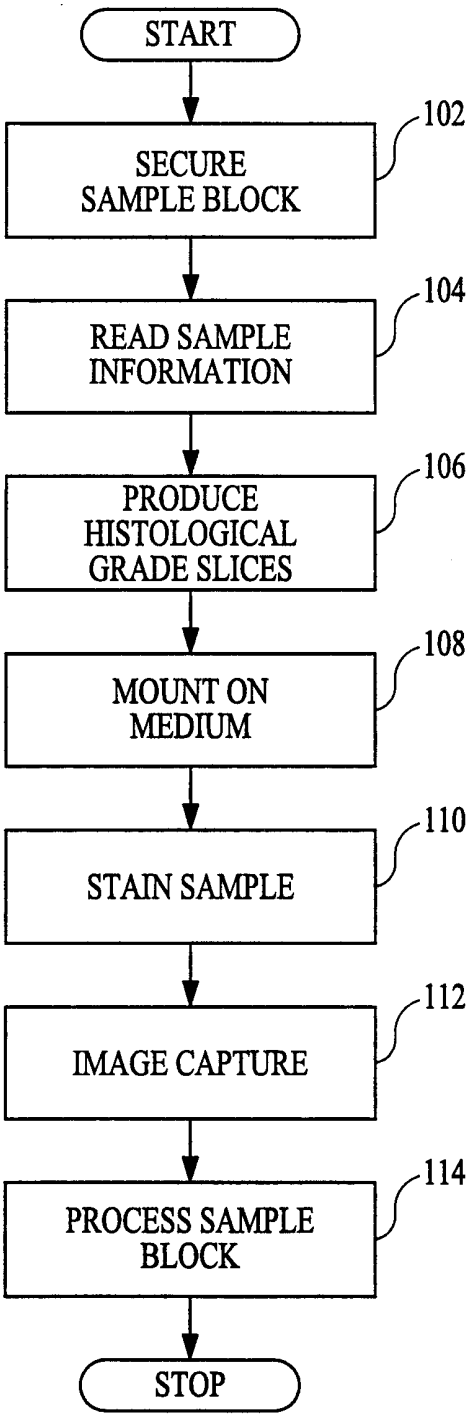
START
SECURE SAMPLE BLOCK
102
READ SAMPLE INFORMATION
104
PRODUCE HISTOLOGICAL GRADE SLICES
106
MOUNT ON MEDIUM
108
STAIN SAMPLE
110
IMAGE CAPTURE
112
PROCESS SAMPLE BLOCK
114
STOP

FIG. 1A

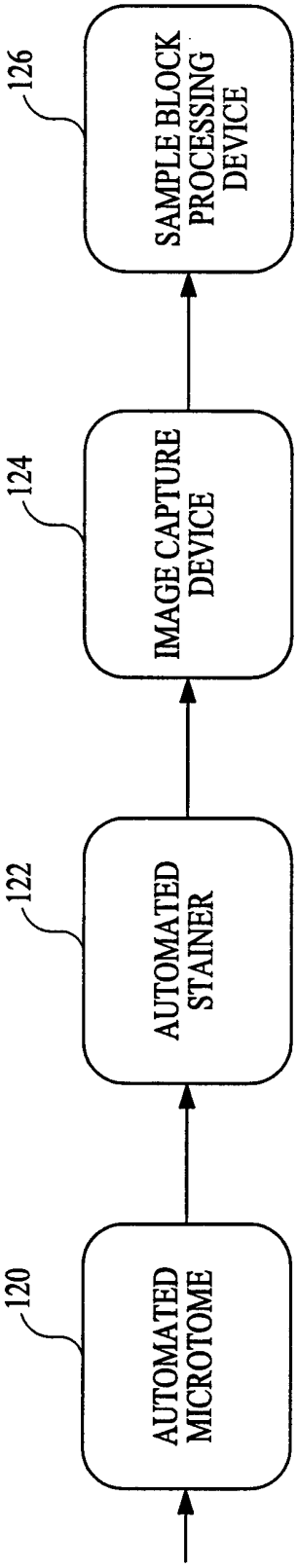
120
AUTOMATED MICROTOME
122
AUTOMATED STAINER
124
IMAGE CAPTURE DEVICE
126
SAMPLE BLOCK PROCESSING DEVICE

FIG. 1B

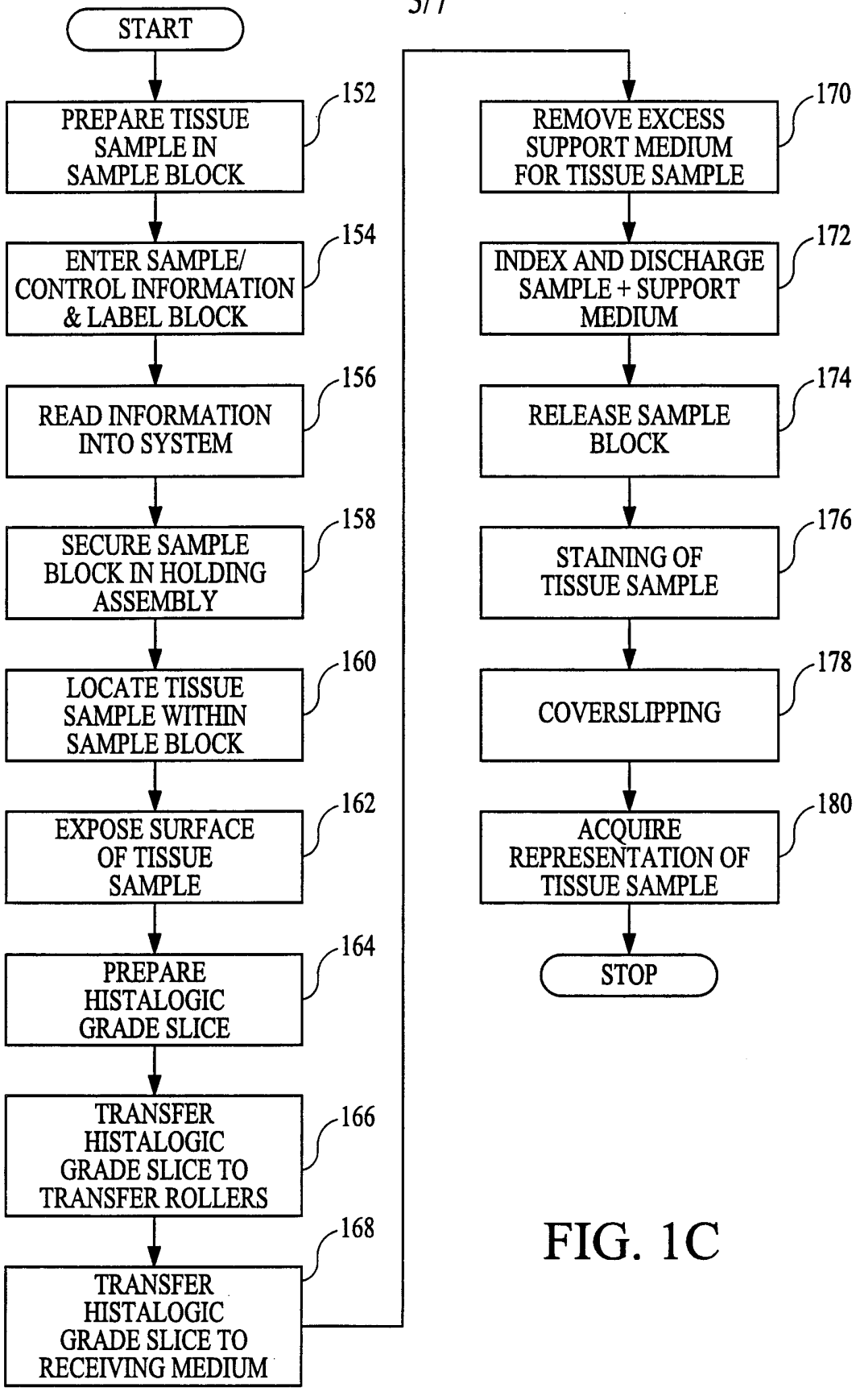
START
PREPARE TISSUE SAMPLE IN SAMPLE BLOCK
152
ENTER SAMPLE/ CONTROL INFORMATION & LABEL BLOCK
154
READ INFORMATION INTO SYSTEM
156
SECURE SAMPLE BLOCK IN HOLDING ASSEMBLY
158
LOCATE TISSUE SAMPLE WITHIN SAMPLE BLOCK
160
EXPOSE SURFACE OF TISSUE SAMPLE
162
PREPARE HISTALOGIC GRADE SLICE
164
TRANSFER HISTALOGIC GRADE SLICE TO TRANSFER ROLLERS
166
TRANSFER HISTALOGIC GRADE SLICE TO RECEIVING MEDIUM
168
REMOVE EXCESS SUPPORT MEDIUM FOR TISSUE SAMPLE
170
INDEX AND DISCHARGE SAMPLE + SUPPORT MEDIUM
172
RELEASE SAMPLE BLOCK
174
STAINING OF TISSUE SAMPLE
176
COVERSLIPPING
178
ACQUIRE REPRESENTATION OF TISSUE SAMPLE
180
STOP

FIG. 1C

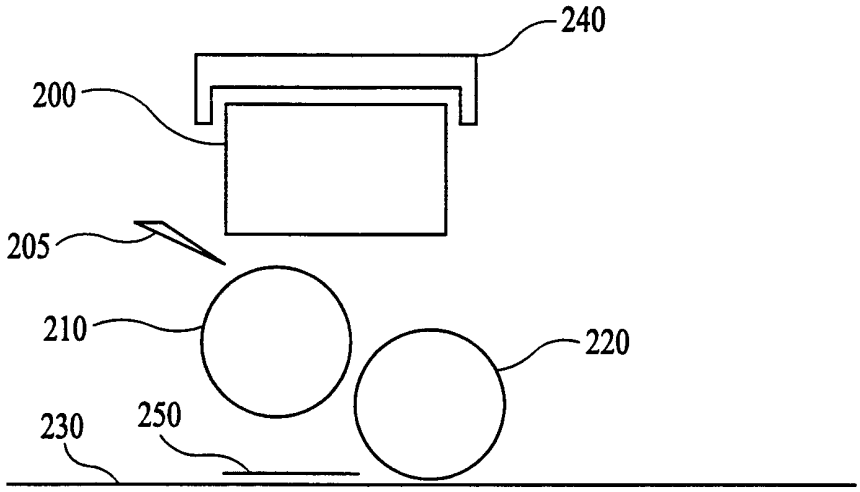

FIG. 2

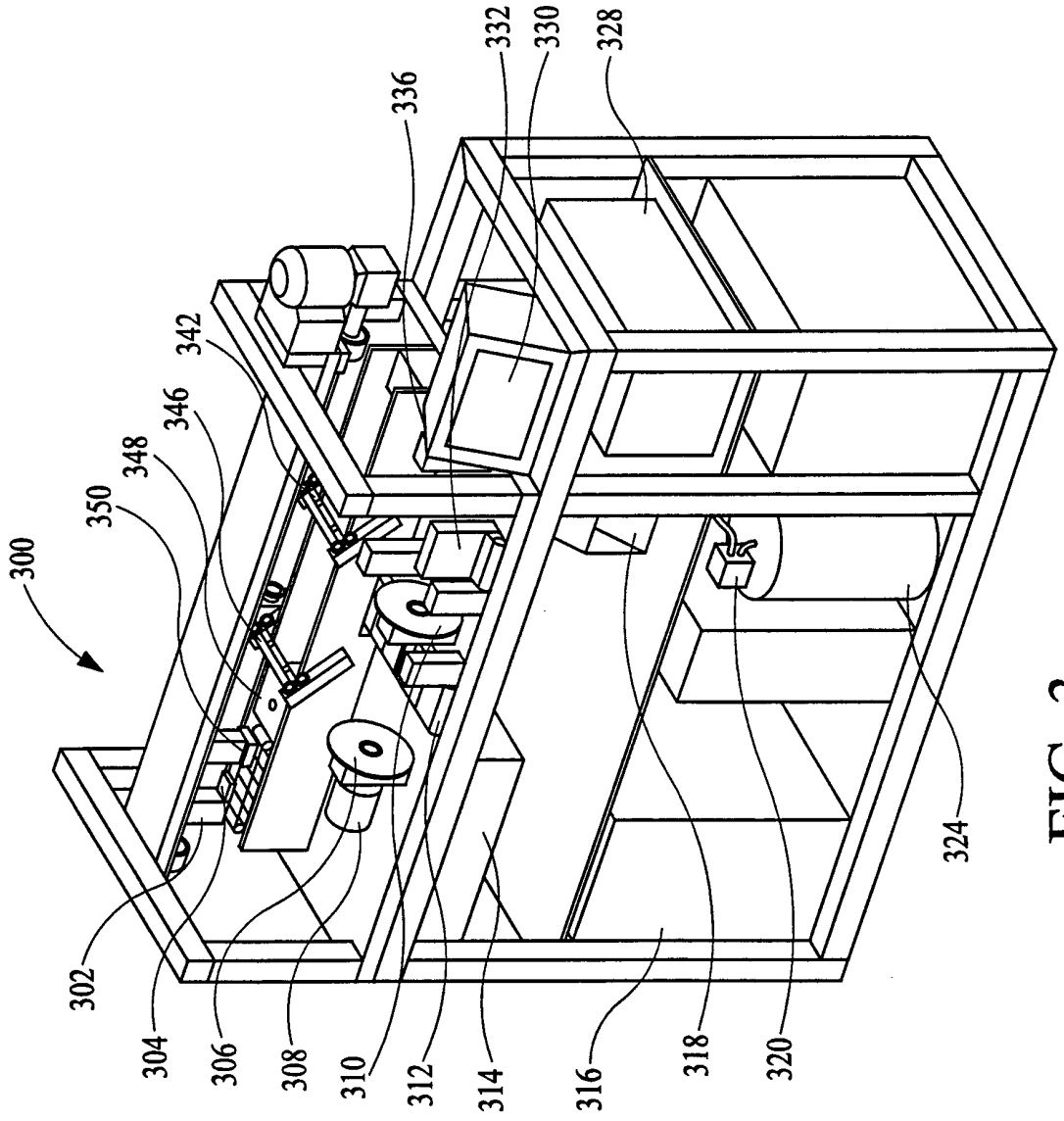
300
302
304
306
308
310
312
314
316
318
320
324
328
330
332
336
342
346
348
350

FIG. 3

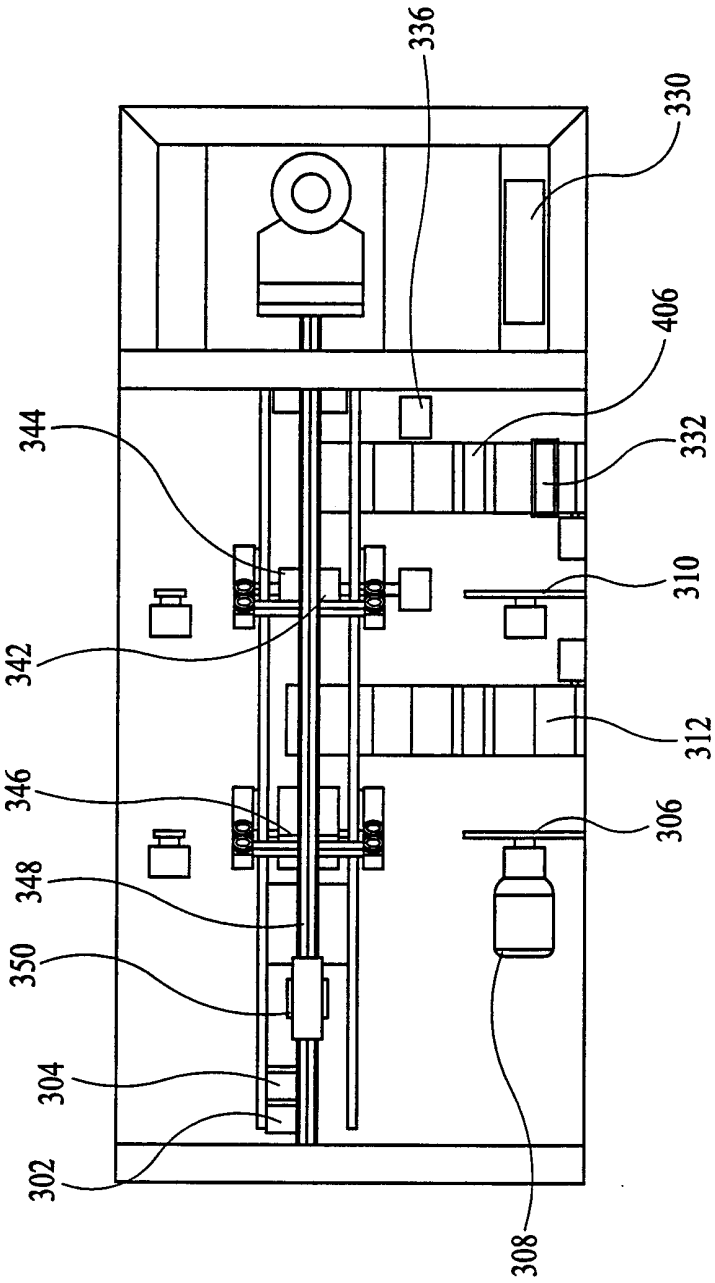

FIG. 4

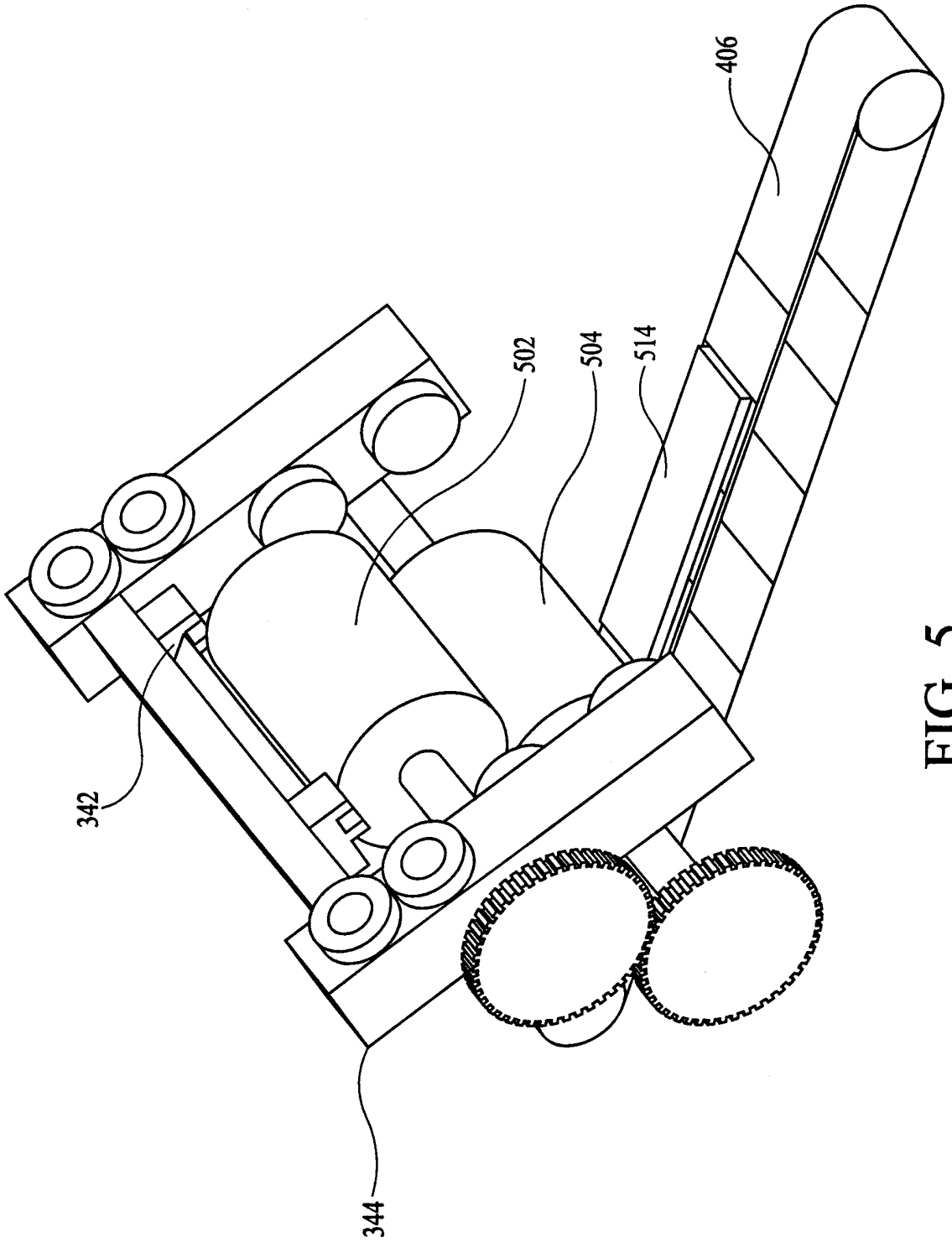

FIG. 5

INTERNATIONAL SEARCH REPORT

Inte .ional Application No
PCT/US 00/09302

A. CLASSIFICATION OF SUBJECT MATTER
IPC 7 G01N1/06 G01N1/31

According to International Patent Classification (IPC) or to both national classification and IPC

B. FIELDS SEARCHED

Minimum documentation searched (classification system followed by classification symbols)
IPC 7 G01N

Documentation searched other than minimum documentation to the extent that such documents are included in the fields searched

Electronic data base consulted during the international search (name of data base and, where practical, search terms used)
EPO-Internal

C. DOCUMENTS CONSIDERED TO BE RELEVANT

Category °	Citation of document, with indication, where appropriate, of the relevant passages	Relevant to claim No.
Y	US 5 619 428 A (LEE SHIH-JONG J ET AL) 8 April 1997 (1997-04-08)	1-3, 5-12,44, 45
A	the whole document	13,28,35
Y	DE 36 15 713 C (WOLF B DR) 3 September 1987 (1987-09-03)	1-3, 5-12,45
A	abstract; figure 2	13,28,35
Y	DE 22 65 184 A (JUNG ZWEIGNIEDERLASSUNG DER FR) 2 September 1976 (1976-09-02)	44
A	the whole document	1,13,28, 45
A	US 5 746 855 A (BOLLES MICHAEL) 5 May 1998 (1998-05-05) abstract; figure 1	1,13,28, 35,44,45

-/--

[X] Further documents are listed in the continuation of box C.

[X] Patent family members are listed in annex.

° Special categories of cited documents :

"A" document defining the general state of the art which is not considered to be of particular relevance

"E" earlier document but published on or after the international filing date

"L" document which may throw doubts on priority claim(s) or which is cited to establish the publication date of another citation or other special reason (as specified)

"O" document referring to an oral disclosure, use, exhibition or other means

"P" document published prior to the international filing date but later than the priority date claimed

"T" later document published after the international filing date or priority date and not in conflict with the application but cited to understand the principle or theory underlying the invention

"X" document of particular relevance; the claimed invention cannot be considered novel or cannot be considered to involve an inventive step when the document is taken alone

"Y" document of particular relevance; the claimed invention cannot be considered to involve an inventive step when the document is combined with one or more other such documents, such combination being obvious to a person skilled in the art.

"&" document member of the same patent family

Date of the actual completion of the international search	Date of mailing of the international search report
31 August 2000	06/09/2000

Name and mailing address of the ISA	Authorized officer
European Patent Office, P.B. 5818 Patentlaan 2 NL - 2280 HV Rijswijk Tel. (+31-70) 340-2040, Tx. 31 651 epo nl, Fax: (+31-70) 340-3016	Hansen, S

1

Form PCT/ISA/210 (second sheet) (July 1992)

INTERNATIONAL SEARCH REPORT

Int. tional Application No
PCT/US 00/09302

C.(Continuation) DOCUMENTS CONSIDERED TO BE RELEVANT

Category °	Citation of document, with indication,where appropriate, of the relevant passages	Relevant to claim No.
A	GB 2 110 838 A (REICHERT OPTISCHE WERKE AG) 22 June 1983 (1983-06-22) abstract; figure 1 ---	1,13,28, 35,44,45
A	US 5 782 572 A (THIEM STEFAN) 21 July 1998 (1998-07-21) abstract; figure 2 ---	1,13,28, 35,44,45
A	US 5 817 032 A (WHITLACH STEPHEN P ET AL) 6 October 1998 (1998-10-06) abstract; figures 8,44 -----	1,13,28, 35,44,45

1

INTERNATIONAL SEARCH REPORT

Information on patent family members

Int. ional Application No
PCT/US 00/09302

Patent document cited in search report	Publication date	Patent family member(s)	Publication date
US 5619428 A	08-04-1997	AU 698149 B	22-10-1998
		AU 5952296 A	18-12-1996
		CA 2220526 A	05-12-1996
		DE 828989 T	19-11-1998
		EP 0828989 A	18-03-1998
		ES 2123475 T	16-01-1999
		JP 11506197 T	02-06-1999
		WO 9638707 A	05-12-1996
DE 3615713 C	03-09-1987	NONE	
DE 2265184 A	02-09-1976	NONE	
US 5746855 A	05-05-1998	AU 4258997 A	15-05-1998
		EP 0935529 A	18-08-1999
		WO 9817472 A	30-04-1998
GB 2110838 A	22-06-1983	DE 3145505 A	26-05-1983
		FR 2516652 A	20-05-1983
		JP 58092928 A	02-06-1983
		SE 8206494 A	18-05-1983
US 5782572 A	21-07-1998	DE 19604001 A	07-08-1997
		GB 2310054 A,B	13-08-1997
		JP 9318502 A	12-12-1997
US 5817032 A	06-10-1998	NONE	