US 20140091097A1

(19) United States

(12) Patent Application Publication

Lane

(10) Pub. No.: US 2014/0091097 A1

(43) Pub. Date: Apr. 3, 2014

(54) **INSULATED FOOD JAR WITH CAMPFIRE OR STOVE HEATABLE INNER CONTAINER**

(71) Applicant: **Marvin Lane**, Wheeling, IL (US)

(72) Inventor: **Marvin Lane**, Wheeling, IL (US)

(73) Assignee: **Thermos L.L.C.**, Schaumburg, IL (US)

(21) Appl. No.: **14/041,741**

(22) Filed: **Sep. 30, 2013**

Related U.S. Application Data

(60) Provisional application No. 61/708,417, filed on Oct. 1, 2012, provisional application No. 61/724,652, filed on Nov. 9, 2012.

Publication Classification

(51) **Int. Cl.**
B65D 81/38 (2006.01)

(52) **U.S. Cl.**
CPC *B65D 81/3837* (2013.01)
USPC **220/592.2**

(57) **ABSTRACT**

An insulated food jar assembly includes an outer insulated container or sleeve having an open mouth and an interior space. The outer insulated container is a double-walled vacuum insulated container. An inner container nests into the interior space of the outer insulated container. The inner container has a collar that extends over the open mouth of the outer container when nested. The collar includes handles and an inner surface that bears against a friction ring about the mouth of the outer container. A lid fastens onto a neck of the inner container. A stopper in the lid fits into the neck and has a gasket to seal against an inward projection of the neck. A gasket at an outer edge of the lid seals against a shoulder of the inner container. The inner container is of a material that may be heated over an open flame heat source.

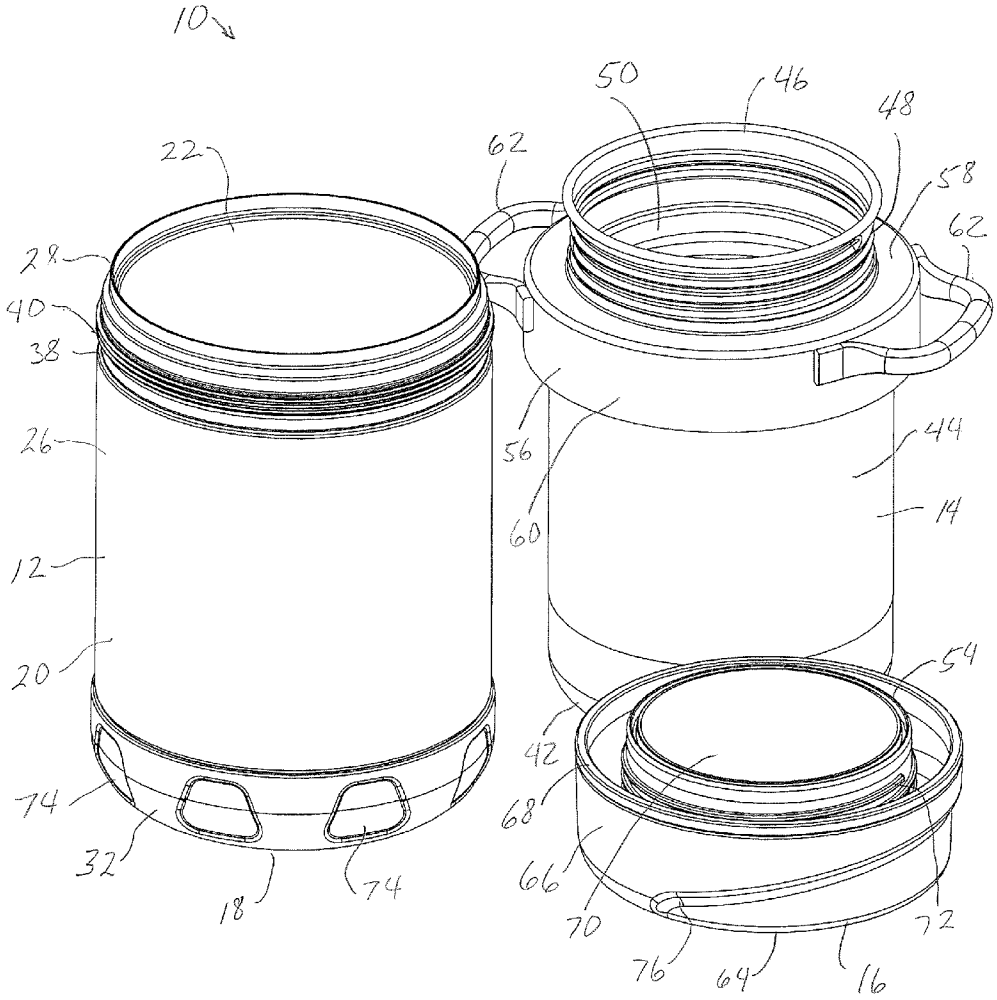

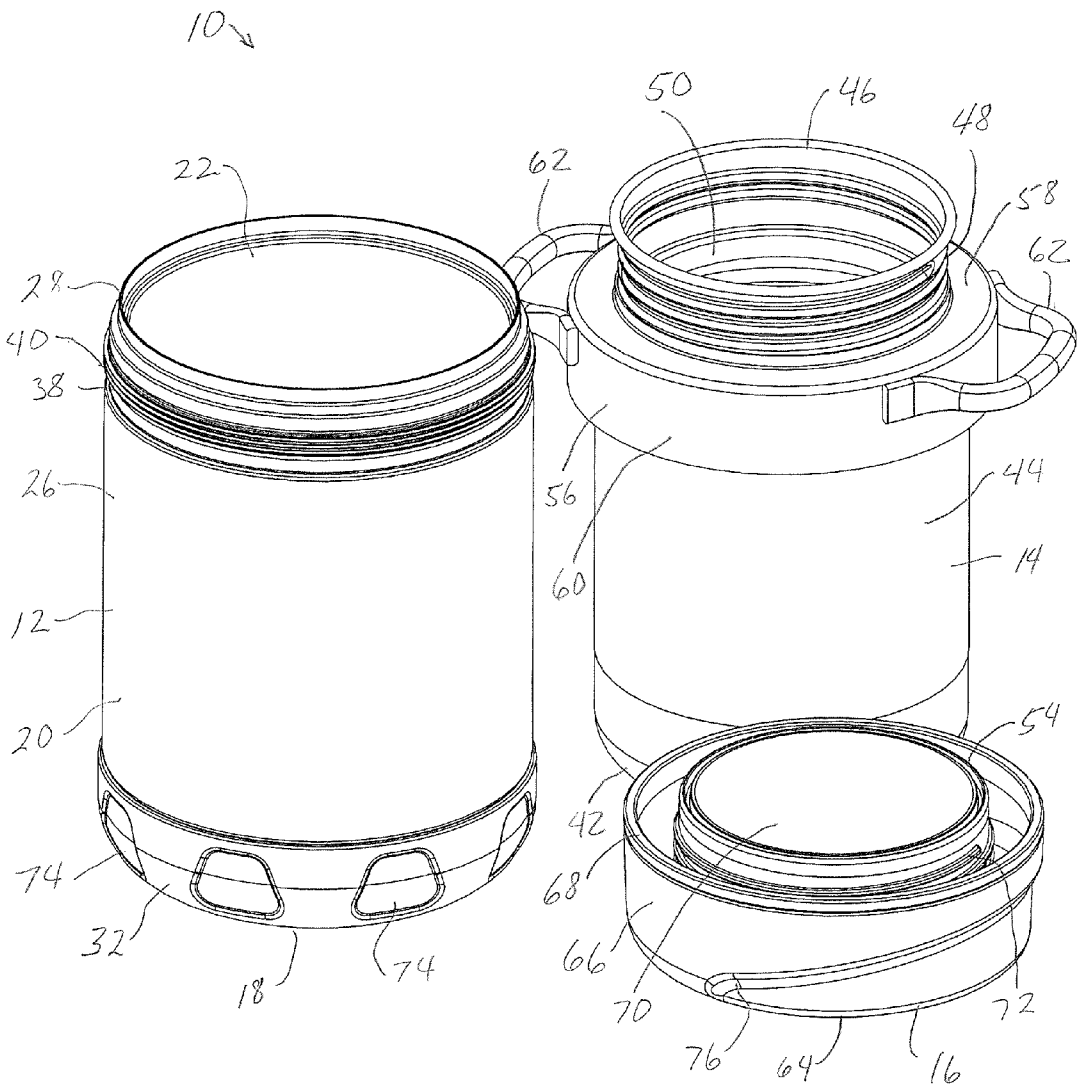
10
50
46
48
22
62
58
62
28
40
38
26
56
44
60
14
12
20
54
42
68
74
32
18
74
66
70
72
76
64
16

FIG. 1

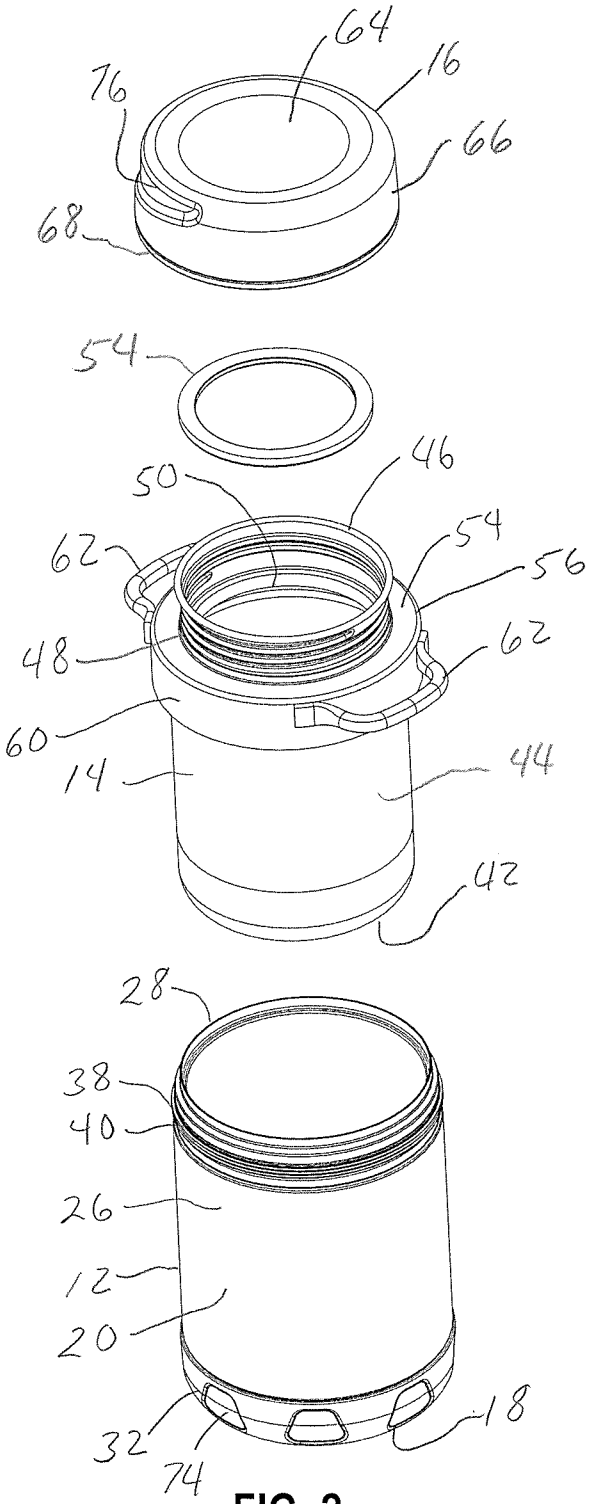
64
16
76
66
68
54
46
50
54
62
56
48
62
60
14
44
42
28
38
40
26
12
20
32
18
74

FIG. 2

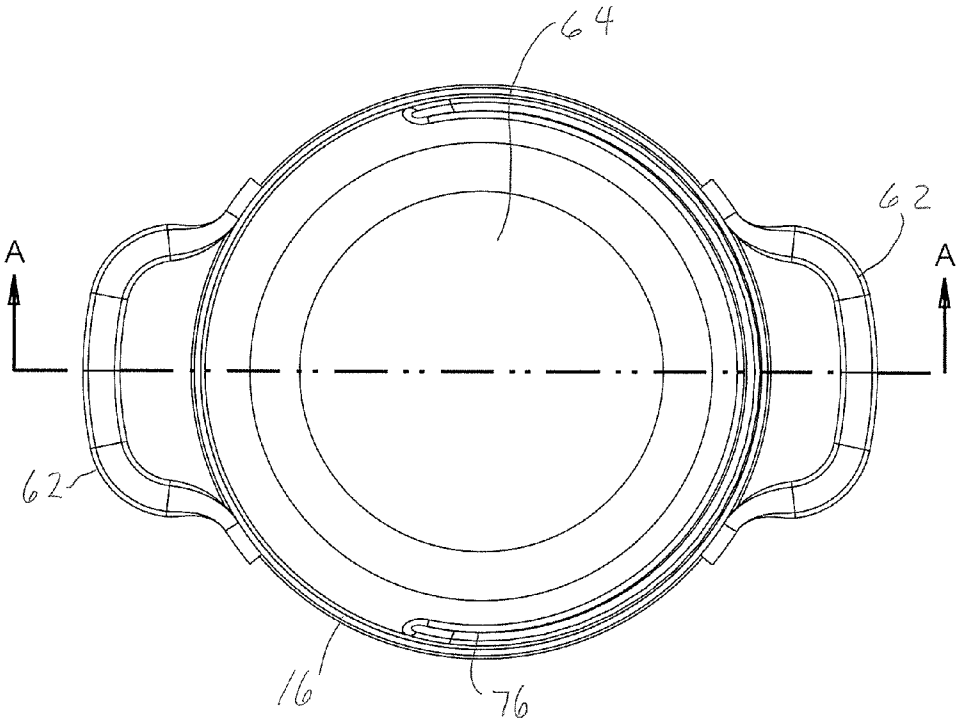

FIG. 3

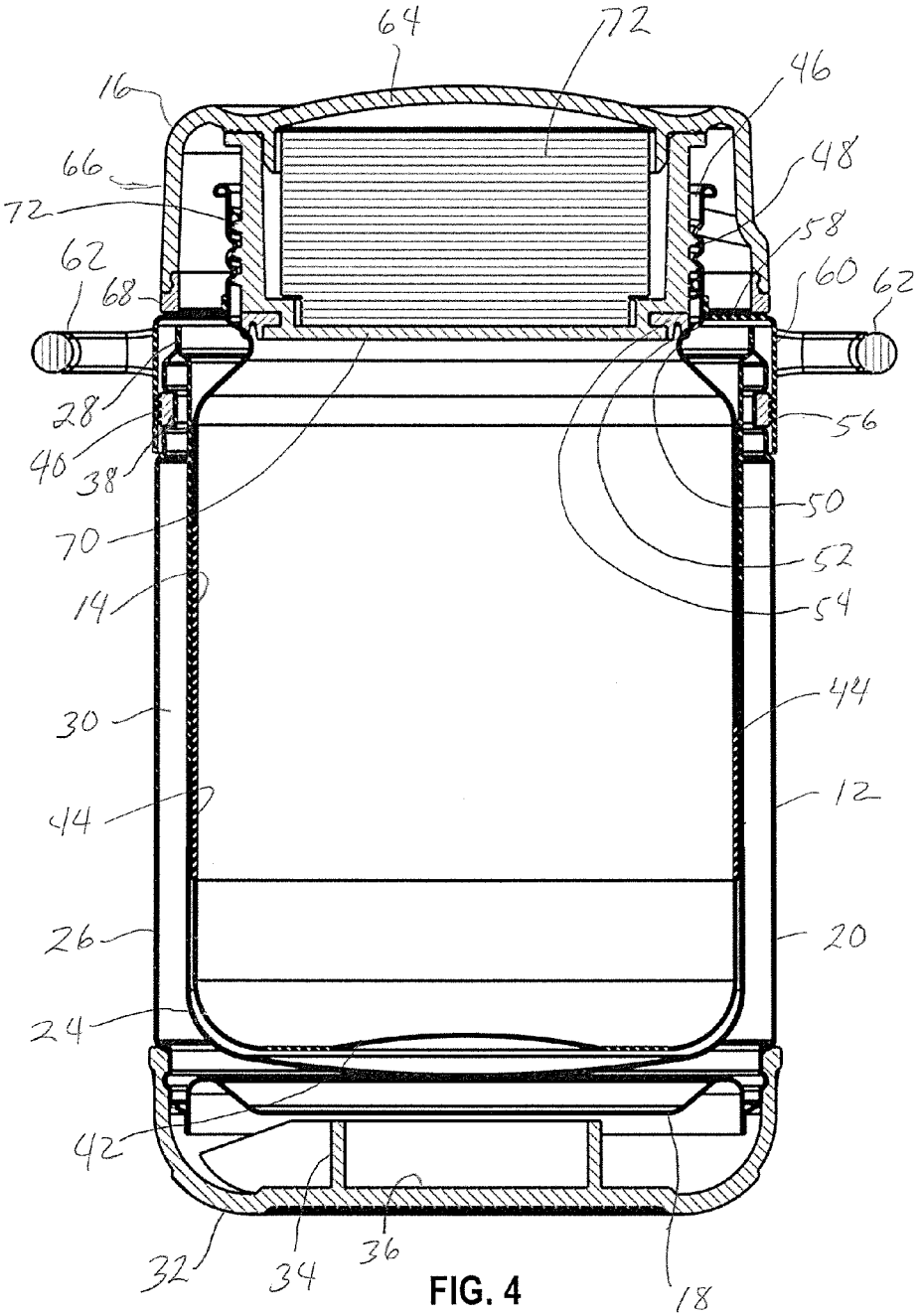
64
72
16
46
66
48
72
58
62
60
62
68
28
56
40
38
50
70
52
14
54
30
44
44
12
26
20
24
42
32
34
36
18

FIG. 4

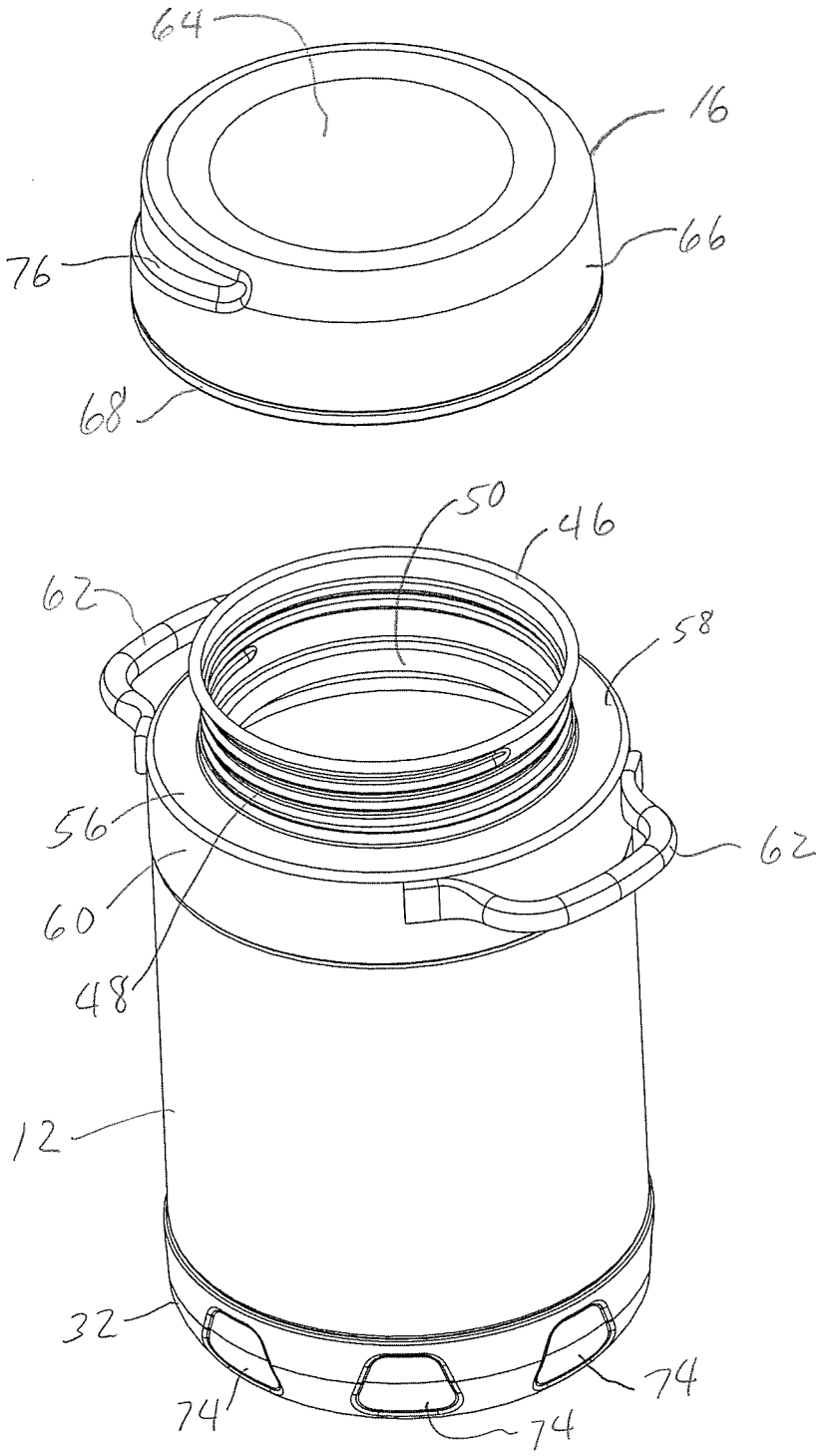

FIG. 5

INSULATED FOOD JAR WITH CAMPFIRE OR STOVE HEATABLE INNER CONTAINER

CROSS-REFERENCE TO RELATED APPLICATIONS

[0001] This application claims the benefit of U.S. Provisional Patent Application Ser. No. 61/708,417 filed Oct. 1, 2012, which is incorporated herein by reference, and also claims the benefit of U.S. Provisional Patent Application Ser. No. 61/724,652 filed Nov. 9, 2012, which is incorporated herein by reference.

FIELD

[0002] Insulated food containers are generally disclosed herein including an insulated food jar with a campfire or stove-heatable inner container.

BACKGROUND

[0003] Traditionally, insulated food containers cannot be used to heat food or beverages over a flame or other heat source, such as a campfire or on a stove. Portions of the insulated container would melt or otherwise be damaged by the campfire or stove. Typically, a food or beverage is heated first in a separate pot or other container and then the food or beverage is poured from the pot into the insulated container for storage or transportation. If the food in the insulated container is to be heated, it is generally necessary to remove the food from the insulated container and place it in a container that is safe for heating. Some insulated containers permit heating of the food in a microwave oven, but even these insulated containers cannot themselves be used to heat the food or beverage that is stored therein over open flames from a campfire or a stove.

[0004] The user who is camping may choose to eat the heated food, or drink the heated beverage, directly out of the cookware, but in doing so there is little protection from burning oneself on the hot cookware, other than by careful handling of the cookware and careful manipulation of the often flimsy handle attached to the camp cookware.

[0005] Accordingly, there is a need for a food or beverage jar that can be used to heat food or beverages contained therein by a variety of heating sources, and thereafter is insulated for heat retention and the safe transportation of the hot food or beverage contained therein, without the worry of burning oneself on the heated container.

SUMMARY

[0006] Disclosed herein is an insulated food jar assembly including an insulated outer container, a heatable inner container that is used to heat food or beverages and which slidably engages with an interior of the insulated outer container, and a lid that sealingly mates with the heatable inner container. The insulated outer container helps to retain the heat within the heatable inner container and also permits a user to safely carry the heatable inner container without the risk of being burned by the hot surfaces of the heated inner container.

[0007] In one embodiment, the lid includes a stopper that engages a mouth and neck of the heatable inner container. The stopper includes a stopper gasket that forms a liquid tight seal with an inner surface of the heatable inner container. The stopper is itself insulated so as to help prevent heat from escaping the heatable inner container through the lid. The insulated container can also be used to insulate cold items from a warmer environment.

[0008] In another embodiment, the heatable inner container includes a collar extending away from the heatable inner container as well as one or more handles connected to the collar for carrying the heatable inner container when the insulated outer container is not being used, such as when the inner container is being placed on the heat source or removed from the heat source. Attaching the handles to the collar and spacing them apart from the sidewalls of the heatable inner container, which sidewalls are heated up by the heat source, allows the handles to remain at a cooler temperature than the hot sidewalls and hot bottom of the heatable inner container.

[0009] In another embodiment, the insulated outer container includes a friction ring that engages with an inner surface of the inner container's collar when the inner container is slid inside the outer container, so as to provide a friction fit between the inner and outer containers. In this manner, the inner and outer containers generally cannot slide apart without the user slidably pulling the heatable inner container out from within the interior of the insulated outer container.

BRIEF DESCRIPTION OF THE DRAWINGS

[0010] FIG. **1** is a perspective view of an embodiment of an insulated food jar with a campfire or stove-heatable inner container in an un-nested condition.

[0011] FIG. **2** is a perspective exploded view of the insulated food jar with a campfire or stove-heatable inner container of FIG. **1**.

[0012] FIG. **3** is a top view of an embodiment of an assembled insulated food jar with a campfire or stove-heatable inner container.

[0013] FIG. **4** is a cross-sectional view of the insulated food jar with a campfire-heatable inner container of FIG. **3**.

[0014] FIG. **5** is a perspective view of the insulated food jar with campfire or stove-heatable inner container, having the inner container mated to the outer container and the lid of the insulated food jar shown in an unmated exploded position.

DESCRIPTION

[0015] While the present invention is capable of being embodied in various forms, the description below of several embodiments is made with the understanding that the present disclosure is to be considered as an exemplification of the claimed subject matter, and is not intended to limit the appended claims to the specific embodiments illustrated. The headings used throughout this disclosure are provided for convenience only and are not to be construed to limit the claims in any way. Embodiments illustrated under any heading may be combined with embodiments illustrated under any other heading.

[0016] The subject matter described herein is with the specificity needed to meet statutory requirements. The inventors have contemplated that the claimed subject matter may also take the form of various alternate embodiments, to include different steps or combinations of steps similar to those described herein, in conjunction with other present or future technologies.

[0017] One embodiment described herein is an insulated food jar assembly with a campfire or stove-heatable inner container.

[0018] Referring to FIG. **1**, an insulated food jar assembly **10** is disclosed in an unassembled condition. The insulated food jar **10** includes an outer insulated container **12**, an inner food container **14** that slidably mates with the outer container **12**, and a lid **16** that seals closed a mouth of the inner container **14**.

[0019] Referring to FIG. **1**, in a preferred embodiment of the disclosure herein, the outer insulated container **12** of the insulated food jar assembly **10** generally takes the shape of a cup having a closed bottom **18**, closed sidewalls **20** extending upward therefrom, and an open upper end **22** formed by the sidewalls. The outer container **12** preferably has a circular cylindrical shape, and is made from stainless steel. However, the disclosure of this preferred embodiment should not be read to limit the shape of the cup to only being circular cylindrical or made from stainless steel. In alternate embodiments, the outer container may take alternate shapes, such as having a square cylindrical shape, other cylindrical shapes, or other shapes that are capable of accommodating a nested inner container as will be disclosed further herein. In addition, in alternate embodiments, the outer container may be made of aluminum or other metallic or polymeric materials or other materials without departing from the scope of the present disclosure.

[0020] Referring to FIG. **4**, in one embodiment, the closed bottom **18** and closed sidewalls **20** of the insulated outer container **12** are both double-walled vacuum-insulated sidewalls. The double-walled, vacuum-insulated bottom and sidewalls are formed by a cup-shaped interior shell **24** being seated inside of a cup-shaped exterior shell **26**, which exterior shell **26** is larger than the interior shell **24**. The shells **24** and **26** are sealingly connected to each other at their open top ends **28** such that together they define a chamber **30** there between. Any air or other gas may be evacuated from or pumped out of the chamber **30** prior to sealing the two shells **24** and **26** together, thereby creating a double-walled, vacuum insulated outer container. The interior and exterior shells **24** and **26** are both preferably made from stainless steel, aluminum, or another material of suitable rigidity sufficient to resist deforming under the forces placed on the sidewalls by the negative pressures of the vacuum within the chamber. In alternate embodiments, the interior and exterior shells may be sized such that only the sidewalls, and not the bottom, of the outer container are double-walled vacuum insulated walls, without departing from the scope of the present disclosure. The insulating space **30** between the walls of the double walled container may contain a vacuum, partial vacuum or an insulation material or may otherwise be insulated.

[0021] Referring further to FIGS. **1** and **4**, in one embodiment, the outer container **12** includes a support base **32** affixed over the bottom **18** of the outer container **12**. The support base **32** provides the outer container **12** with a stable base upon which the outer container **12** may rest on a table or other flat surface. In one embodiment, the support base **32** may be made of plastic and have the shape of a shallow cup that is snapped or otherwise fastened over the closed bottom of the outer insulated container. In other embodiments, the support base may be made of rubber, rubberized plastic, rubberized metal, or other such materials that may provide the outer insulated container with a non-slip or treaded surface at the bottom end. In still further alternate embodiments, the support base may have a tread pattern imprinted in or on an outer surface thereof to provide further non-slip functionality to the outer insulated container. The support base **32** may also include one or more strengthening ribs or webs **34** projecting from an interior surface **36** thereof. The strengthening ribs **34** provide structural strength to the support base **32** and may rest against or near the bottom surface **18** of the closed bottom of the outer insulated container **12**. The support base **32** may be removable so as to facilitate easy cleaning of the outer insulated container **12**, or the support base **32** may be permanently affixed to the outer insulated container **12**.

[0022] In a preferred embodiment, the insulated container **10** includes a recessed groove **38** disposed in an outer surface of the container's sidewall **20**. The recessed groove **38** is located near the upper open end of the insulated container **10** and is a continuous groove that extends around the full exterior circumference of the outer container **12**. A friction ring or gasket **40** is seated in the recessed groove **38**. In one embodiment, this friction ring **40** is a rubber ring having one or more fins projecting radially outward. The friction ring **40** is configured to provide a friction fit between the heatable inner container **14** and the outer insulated container **12** so that, as will be explained in further detail below, when the heatable inner container **14** is nested within the outer insulated container **12**, the fins of the friction ring **40** rub against a portion of the heatable inner container **14** and prevent the two containers **12** and **14** from sliding apart without intentionally being pulled apart. The friction ring **40** may maintain its location on the outer container by spring force resulting from the ring **40** being stretched while seated in the recessed groove **38** and an interference fit with various surfaces of the groove. However, the disclosure of the above embodiment should not be read to limit the shape or configuration of the friction ring to a rubber ring with fins seated in a recessed groove. Rather, additional configurations of recessed grooves and friction rings can be used to achieve the same purpose without departing from the scope of the present disclosure. Accordingly, alternate friction ring configurations other than those disclosed herein may be used without departing from the scope of the present disclosure. Furthermore, in alternate embodiments the friction ring may be permanently bonded to the outer container within the recessed groove, or bonded to the outer surface of the outer container without the need for a recessed groove, depending on the configuration, size, and shape of the friction ring and the desired amount of friction between the outer and inner containers. The friction ring may be made of rubber, silicone rubber, or any other polymer that will achieve the purpose and functionality of providing a friction fit between the inner and outer containers.

[0023] Referring to FIGS. **1** and **4**, the heatable inner container **14** has a closed bottom end **42** and closed sidewalls **44** that extend upward therefrom to form a cup and define a mouth **46** of the heatable container **14**. In a preferred embodiment, the sidewalls **44** of the heatable container **14** also define a neck **48** disposed adjacent to the mouth **46** of the inner container **14**. In one embodiment, the neck **48** includes one or more threads formed therein that are used to mate with one or more complimentary threads located on the lid **16** of the insulated food jar assembly **10** for sealing the lid **16** to the heatable inner container **14**. In this manner, the heatable inner container **14** generally takes the shape of a jar. However, the disclosure of threaded structures should not be read to limit the structures that are used to sealingly mate the lid **16** to the mouth **46** of the heatable inner container **14** of the insulated food jar assembly **10**. In alternate embodiments, the neck may include bayonet mounting features that mate with complimentary bayonet mounting structures located on the lid of the

food jar assembly, or otherwise use additional mating structures and methods, without departing from the scope of the disclosure herein.

[0024] Furthermore, in one embodiment, the heatable inner container **14** includes a transition zone **50** disposed between the main portion of the sidewall **44** and the neck **48**. This transition zone **50** is the portion of the sidewall **44** that reduces the diameter of the sidewall **44** from the main food or beverage carrying portion of the inner container **14** to the neck portion **48** of the heatable inner container **14**. In one embodiment, the transition zone **50** includes a rigid sealing surface **52** against which a mated stopper gasket **54** disposed in the lid **16** forms a liquid tight seal to seal the inner container **14** closed when the lid **16** is attached to the heatable inner container **14**.

[0025] In a preferred embodiment the heatable inner container **14** further includes a collar **56** connected to the sidewall **44** and extending outward therefrom. In one embodiment, the collar **56** is connected to the sidewall **44** adjacent to the threads, or other locking feature, disposed in the neck **48** of the heatable inner container **14**. In one embodiment, the collar **56** extends radially outward at **58**, away from the sidewall **44** of the heatable inner container **14**, and then turns downwards at a predetermined angle, for example 90-degrees, and extends at **60** in the direction of the bottom **42** of the heatable inner container **14**. In one embodiment, one or more handles **62** are attached to the collar **56**. In the illustrated embodiment, a pair of the handles **62** is provided, one on each side of the container **14**. By providing handles **62** on the collar **56**, the handles **62** are separated from the sidewall **44** of the heatable inner container **14** and are thus insulated to some extent from the sidewalls **44** when the inner container **14** is heated. During use, the handles **62** will thus remain cooler than the sidewalls **44** of the heated inner container **44**.

[0026] In a preferred embodiment, the inner container **14** is made from stainless steel. However, in alternate embodiments, the container may be made from alternate materials, such as aluminum, copper, or other such materials that permit the heatable inner container **14**, as well as the consumable contents that will be stored therein, to be heated over an open flame, such as from a campfire or gas stove, or to be placed on the heating elements of an electric stove or hot plate or on some other heating means without departing from the scope of the present disclosure. The inner container **14** may be formed by draw forming processes and/or other manufacturing methods, including welding of various components, such as the collar **56** and/or handle **62**, to the main inner container body.

[0027] It will also be appreciated that alternate configurations of the heatable inner container are contemplated without departing from the scope of the disclosure herein. For example, while the depiction of the heatable inner container **14** shown in FIGS. **1**, **2**, **4**, and **5** shows the collar **56** being located between the transition zone **50** and the neck **48** of the inner container **14**, it should be appreciated that in alternate embodiments, the collar may be located at alternate locations without departing from the scope of the present disclosure. For example, in an alternate embodiment, the collar may be located about the mouth of the container, extending radially outward therefrom. In this manner, with the collar located at the top of the inner container, the entire inner container, including the collar and handle, may be draw formed from a single sheet of stainless steel without the need to attach separate components thereto by other processes or subsequent steps.

[0028] Referring to FIGS. **1**, **2**, **4**, and **5**, the lid **16** of the insulated food jar assembly **10** is generally in the shape of an inverted cup. The lid **16** has a closed top **64** and one or more closed sidewalls **66** extending downward from the outer edge of the closed top **64**. In a preferred embodiment, the lid **16** has the shape of a circular, cylindrical upside down cup. A continuous backup gasket **68** is attached to and extends downward form the lower free edge of the sidewalls **66**. The lid **16** further includes a stopper **70** extending downward from the bottom surface of the closed top **64** in the same direction as the downward extending sidewalls **66**. The stopper **70** is centered about the axial center of the lid **16** and has a closed bottom end. The stopper **70** further includes one or more threads **72** disposed in an outer circumferential surface that is configured to mate with complimentary threads disposed in the neck **48** of the heatable inner container **14**. However, as will be appreciated, in alternate embodiments the stopper may include bayonet fastening structures that mate with complimentary bayonet structures disposed on the neck of the heatable inner container, as opposed to threaded structures, without departing from the scope of the present disclosure.

[0029] The lid **16** further includes the stopper gasket **54** disposed about the lower free end of the stopper **70**. In one embodiment, the stopper gasket **54** is seated inside a groove disposed in the outer circumferential surface of the stopper **70** at the bottom free end of the stopper **70**. The stopper **70** is configured to mate inside of the neck **48** of the heatable inner container **14**, with the stopper gasket **54** being configured to sealingly mate against the rigid sealing surface **50** in transition zone of the heatable inner container **14**, so as to form a liquid tight seal there between in order to prevent any fluids from leaking out of the interior space of the inner heatable container **14**. It should be appreciated that in alternate embodiments the stopper gasket may be seated in a groove located in the bottom surface of the stopper, with the stopper gasket mating against a complimentary sealing surface located in the heatable inner container, without departing from the scope of the present disclosure. In still alternate embodiments, the stopper gasket may be located at the base (or top) of the stopper **70** and seated in a groove disposed in the bottom surface of the lid's closed top, so that when the lid and inner container are mated, the mouth of the heatable inner container presses against the stopper gasket to form the liquid tight seal. Still further arrangements of the lid's stopper gasket are contemplated which form a liquid tight seal with complementary features in the heatable inner container, without departing from the scope of the present disclosure.

[0030] The lid **16** and stopper **70** are preferably made of a heat resistant plastic that will not melt in high heat. Alternatively, the lid **16** and stopper **70** may be made from stainless steel, other metals, or other polymers that can withstand high heat, without departing from the scope of the present disclosure. In one alternate embodiment, the stopper **70** is a hollow cup that has a block of rigid insulation **72** inserted into its open top end. The open end of the stopper **70** is then permanently and sealingly attached to the bottom surface of the lid's closed top **64**, so that the insulation **72** is permanently encapsulated there between, with the closed bottom end of the stopper **70** protruding downward from lid's bottom surface **64**, as previously disclosed. In this manner, the block of insulation **72** inside the stopper **70** provides thermal insula-

tion, which will help prevent excess heat from the consumable contents located inside the inner container **14** from escaping through the lid **16**, and additional structural rigidity to the stopper **70**.

[0031] Referring to FIG. **1**, the insulated food jar assembly **10** is show in its unassembled state. To use the assembly, food or liquid beverages are placed inside the heatable inner container **14** through the mouth **46** of the inner container **14**. The inner container **14**, which in one embodiment is made of stainless steel, is then placed over (or the bottom surface of the inner container is placed on) a heat source such as a camp fire, camping stove or grill grate, kitchen stove, or other similar heat source. The food or beverage located inside the inner container **14** is thus heated, primarily by conduction of heat through the bottom **42** and/or sidewalls **44** of the inner container **14**. The consumable contents in the heatable inner container **14** are heated to the desired temperature, which could be anywhere from room temperature to boiling, or any other desired temperature. When the consumable contents have reached the desired temperature, the user grasps the handles **62** of the inner container **14** and removes the inner container **14** from the heat source. Referring generally to FIGS. **2-5**, the inner container **14** is then slid, bottom first, into the insulated outer container **12** so that the inner container **14** is nested inside the outer container **12**. The insulated outer container **14** and the heatable inner container **12** are sized such that there is a relatively close fit between the two, with little space between the respective sidewalls of the mated inner and outer containers.

[0032] Referring to FIG. **4**, when the heatable inner container **14** is slid inside the insulated outer container **12**, the downward-extending portion **60** of the inner container's collar **56** also slides over the top **22** of the outer container's sidewalls and around the friction ring **40** disposed therein. Thus, the top **22** of the outer container **12** slides into the space that exists between the exterior surface of the inner container's sidewall **44** and the downward extending portion **60** of the inner container's collar **56**. The friction ring **40** disposed at the top of the outer container **12** engages with an interior surface of the downward extending portion **60** of the collar **56** to provide a friction fit there between. In one embodiment, the friction ring **40** includes one or more flexible fins that extend from a main portion of the friction ring **40** and make contact with the interior surface of the downward extending portion **60** of the inner container's collar **56**. The fins deflect as they come in contact with the interior surface of the collar **56** and create a friction fit there between. In alternate embodiments, the friction ring **40** may be configured differently but still provide for a friction fit between at least a portion of the inner and outer containers so that they will remain nested until an exterior force is applied to pull them apart. The friction that is created between the inner and outer containers by the friction ring **40** engaging with the collar **56** on the inner container **14** is sufficient to prevent the inner and outer containers **14** and **12** from sliding apart without the user having to intentionally pull the inner and outer containers apart. In this manner, the stainless steel inner container **14** can be used to heat up food or other consumable materials on a stove or over campfire, and can then be inserted into the insulated outer container **12** for heat retention and safe carrying of the inner container **14** by the user. The outer container **12** that holds the heated inner container **14** full of food or other consumable materials provides an insulated barrier to both retain the heat within the inner container **14** and food, thus keeping its contents hot, while at the same time permitting a user to carry the inner container **14** without worrying about getting burned.

[0033] If the user does not intend to immediately consume the food or beverage contained inside the inner container **14** that is nested within the insulated outer container **14**, the user may sealingly close the inner container **14** by attaching the lid **16** to the mouth **46** of the inner container **14**. The lid **16** of the preferred embodiment is screwed onto the top open end of the inner container **14** by inserting the stopper **70** of the lid **16** into the mouth **46** of the inner container **14** and turning the lid **16** to mate the threads **72** disposed in or on the exterior side surfaces of the lid's stopper with the threads formed in the neck **48** of the inner container **14**. In an alternate embodiment as previously disclosed, the lid and/or stopper may include bayonet style features that mate with complimentary features located on the inner container, or other such similar mating features that are capable of sealingly closing the inner container with the lid.

[0034] In the preferred embodiment, when the lid **16** is mated to the inner container **14** to sealingly close the inner container **14**, the stopper gasket **54** that is disposed in the end of the stopper **70** is seated against the rigid sealing surface **52** in the transition zone **50** of the inner container **14** to form a liquid tight seal there between. In this manner the food and/or beverages contained within the inner container **14** are prevented from leaking out of the inner container **14**. In addition, because the stopper **70** includes a block of insulation **72** encased within the stopper **70**, the act of sealingly mating the lid **16** to the inner container **14** further provides additional heat retention for the food and/or beverage contained therein.

[0035] In addition, when the lid **16** is mated to the inner container **14**, the backup gasket **68** that extends downward from the free end of the sidewalls **60** of the lid **16** is pressed against an exterior surface of the collar **58** extending from the inner container **14** and forms a liquid tight seal there between. In this manner, should the stopper gasket **54** ever be damaged or wear out over time through excessive or improper use permitting the hot food or beverage to leak into the lid **16**, the backup gasket **68** provides an additional seal that will prevent the hot food or beverages from leaking past the lid and potentially burning the user, for example when transporting the insulated food jar assembly **10**.

[0036] Of course, the insulated food jar **10** may be used to store and transport chilled foods or beverages which are to be consumed in a chilled state or which are to be heated prior to consumption. The present food jar assembly **10** has particular utility when used to store or transport foods or beverages that are chilled during storage and transport and then, prior to consumption, the food or beverage is heated while still in the inner container **14**, such as by heating the inner container on a stove or campfire. It is therefore unnecessary to transfer the food or beverage from an insulated transport container to a different container for heating.

[0037] The insulated food jar assembly **10** includes grip features that are decorative as well as useful when opening the food jar **10**. For example, the base **32** of the outer container **12** has grip contours that aid the user in obtaining a slip-free grip on the outer container during removal of the lid **16** from the jar assembly **10** and/or during removal of the inner container **14** from the outer container **12**. The lid **16** has a grip contour **76** that likewise provides a decorative feature that also assists the user in a slip-free grip of the lid **16** during removal of the lid **16** from the inner container **14**.

What is claimed is:

1. An insulated food jar assembly comprising:

an insulated outer container having an open first end;

a heatable inner container having an open mouth and configured to slidably nest inside said insulated outer container through said first open end, the heatable inner container being of a material and configured for heating over an open flame heating source; and

a lid having a gasket configured to engage the open mouth of said inner container to provide a liquid tight seal between the lid and said heatable inner container.

2. The insulated food jar assembly of claim **1**, wherein said lid includes a closed top cover and closed sidewalls extending downward from a perimeter of said closed top cover.

3. The insulated food jar assembly of claim **2**, wherein said lid further includes a stopper protruding downward from a bottom surface of said closed top cover, and wherein said stopper is configured to seat within said open mouth of said inner container.

4. The insulated food jar assembly of claim **3**, further comprising a gasket disposed about an outer circumference of said stopper.

5. The insulated food jar assembly of claim **1**, wherein said insulated outer container is a double walled vacuum insulated outer container.

6. The insulated food jar assembly of claim **5**, wherein said insulated outer container includes a support base connected to a lower portion of said insulated outer container.

7. The insulated food jar assembly of claim **1**, wherein said heatable inner container includes a collar extending away from a sidewall of said inner container.

8. The insulated food jar assembly of claim **7**, wherein said heatable inner container includes one or more handles attached to said collar of said inner container.

9. The insulated food jar assembly of claim **1**, wherein said lid and said heatable inner container each include one or more complimentary threaded structures for sealingly fastening said lid to said heatable inner container.

10. The insulated food jar assembly of claim **1**, wherein said insulated outer container and said heatable inner container are configured to be selectively positioned in a nested arrangement, wherein when in said nested arrangement at least a portion of said heatable inner container is disposed within an interior of said insulated outer container by a bottom portion of said heatable inner container being slidably engaged through an open top end of said insulated outer container to a fully seated position within said insulated outer container.

11. The insulated food jar assembly of claim **10**, further comprising:

a friction ring disposed between an exterior surface of said insulated outer container and a surface of said heatable inner container, wherein said friction ring provides a predetermined amount of sliding friction force between said inner container and said outer container when said containers are in the nested arrangement.

12. The insulated food jar assembly of claim **11**, wherein said predetermined amount of friction force between said inner container and said outer container is sufficient to prevent a force of gravity, acting in the direction of sliding movement between said containers, from slidably moving one of said containers beyond the fully inserted position with respect to the other of said containers, when said inner container is fully inserted into said outer container.

13. The insulated food jar assembly of claim **11**, wherein said friction ring is disposed about an upper end of said insulated outer container, said friction ring having at least one fin protruding beyond an exterior surface of said outer insulated container, wherein said at least one fin is configured to contact said heatable inner container and apply said predetermined amount sliding friction force against said heatable inner container.

* * * * *