Aug. 19, 1947. E. R. CONKLIN 2,425,866

POPGUN

Filed June 5, 1944

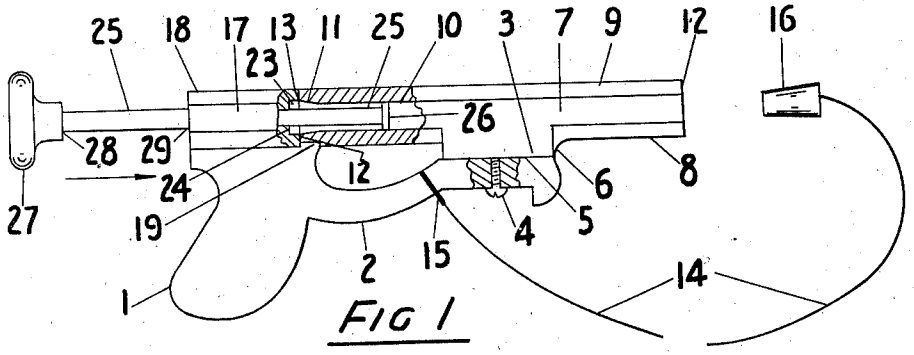

FIG 1

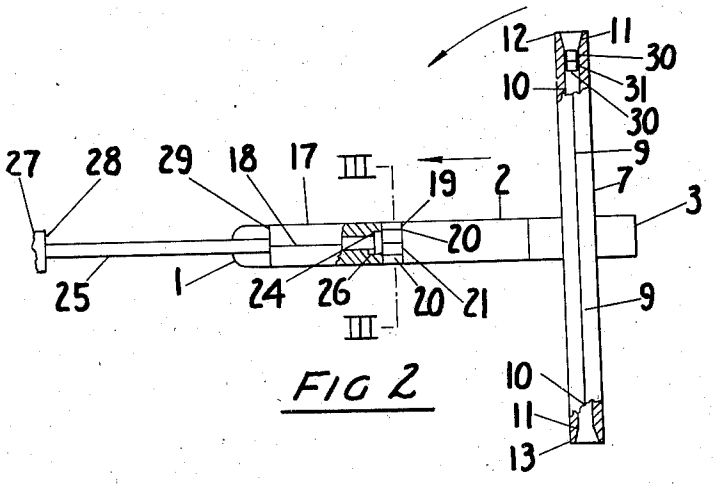

FIG 2

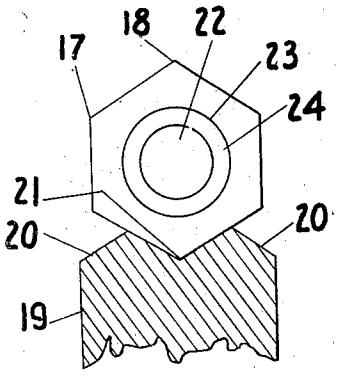

FIG 3

FIG 4

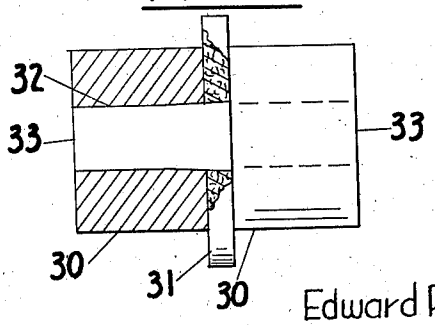

Inventor
Edward R. Conklin

By

Attorney

Patented Aug. 19, 1947 2,425,866

UNITED STATES PATENT OFFICE

2,425,866

POPGUN

Edward R. Conklin, Wauseon, Ohio

Application June 5, 1944, Serial No. 538,813

2 Claims. (Cl. 124—13)

1

This invention relates to noise-making devices, more especially for juveniles.

This invention has utility when incorporated in a multiple discharge or swivel barrel pop-pistol.

Referring to the drawings:

Fig. 1 is a side elevation of an embodiment of the invention in a toy pistol, at the pop position therefor;

Fig. 2 is a plan view of the pistol of Fig. 1, with the ram-rod withdrawn, and the barrel at half swing back for the reloading reverse position, parts being in section;

Fig. 3 is a view on the line III—III, Fig. 2, showing the wedge seat for aligning the barrel major section with the ram rod carrying breech section; and

Fig. 4 is a detail view, with parts broken away, of the valve reciprocable in the pistol barrel major section as actuated by the ram-rod.

A grip 1 has a downwardly-arched, slightly yieldable or spring-providing forward extension 2 to a seat 3, upwardly thru which extends a pivot pin 4 fixed with complementary seat 5, snugly resting upon the seat 3. The seat 5 is the lower face of a boss 6 from a major barrel section 7.

The barrel section 7 is of polygonal exterior form in providing a wedge-corner 8 along its lower side and a similar central sight-line 9 along its top extent. Concentrically of the barrel section 7 is a passage or bore 10, with slightly tapered enlargement end portions 11 to the respective ends 12, 13, of the section 7. A flexible line or cord 14 may have a tie or attaching portion 15 with the extension 2 as an automatic retrieving means for a compressible stopper or cork 16 as the missile to be projected in a limited range.

The device of this disclosure may be non-metallic in its general elements. It is susceptible of economical production from wood, especially from properly jigged equipment. With such production basis, the seat 3, extension 2 and grip 1, may have integral therewith a breech or minor barrel section 17 of similar exterior general polygonal shape to the section 7. There is thus provided a sight-line edge 18 to align with the edge 9. Forwardly from the barrel section 17 and from the lower vicinity is an extension 19 having wedge or cam-forming faces 20 on its upper portion to a central V-shaped seat 21 to center with and hold the barrel section 7 as its lower edge 8 rides over the face 20 in swinging on the pivot bearing 4. A slight yield or spring action of the section 2 holds the section 7 in

2

alignment with the section 17, as the edge 8 comes into the seat 21.

The section 17 has concentric therewith, and in alignment with the bore 10 of the barrel section 7, a bore 22, desirably of slightly less diameter than the bore 10. However, adjacent the barrel 7 end 12, or 13, as may be thereagainst, the section 17 has in alignment with its bore 22 a short enlarged diameter region 23, to a shoulder 24.

Before the assembly of the barrel section 7 on the pivot 4, a ram-rod 25 may be inserted thru the opening surrounded by the shoulder 24 thru the region 23 into the bore 22 of the section 17. A terminal enlargement 26 on the rod 25 may lodge against the shoulder 24 with the rod fully retracted from the barrel section 7, thus leaving sufficient clearance for the repeat functioning of the toy, by swinging the barrel 180° between each pop operation. Upon the end of the rod 25 as protruding from the section 17 away from the section 7, there may be anchored by adhesive or other means, a knob or enlargement 27, adapted to be struck in effecting the pop discharge of the pistol. The diameter of the enlargement 26 of the rod 25 is such as readily to enter the terminal enlargement 11 as toward the section 17. Furthermore, the enlargement 26 is of less diameter than the bore 10.

The ram-rod 25 is of such over-all length as to the barrel section 7, that as the knob 27 has its shoulder 28 abut end face 29 of the section 17, the enlargement 26 is short of extending to the remote tapered portion 11 of the section 7. In this clearance region is located the effective valve device comprising a pair of short cylindrical elements 30 spaced by a centrally perforate leather disk 31, all centered and held in rigid assembly by a dowel pin 32 concentrically therethru and adhesive anchored. The respective dowel-carrying ends of this valve unit have such ends 33 impacted by the rod portion 26. While the valve portions or elements 30 are of slightly less diameter than the bore 10 of the section 7, the over-all or full diameter of the leather washer or valve element 31 is slightly in excess of the diameter of the bore 10. This means that there is a slight compression of the leather 31, and it serves, in cooperation with the compressible missile 16 as an effective holding means for compressed air to such an extent upon sudden impacting of the knob 27 that there results a resounding pop upon the escape of the missile 16.

Reloading is quickly and simply effected. The operator withdraws the ram-rod 25 to have its

enlargement 26 strike the shoulder 24. The barrel section 7 is thereby released for swinging its end 13 off the seat 21, and in the full 180° turning or half-rotation, to snap the end 12 into the seat 21. In this swinging operation to reverse the direction of the barrel section 7, the valve device from its position remote from the section 17, is now brought into proximity thereto. With such end 13 away from the section 17, the missile 16 is snugly inserted thereinto, and the knob 27 may be given a quick blow in effecting a repetition of the explosion simulating pop action of this toy pistol. There is accordingly herein provided an article for child entertainment, attractive in its getup, and non-hazardous in the prescribed handling thereof.

What is claimed and it is desired to secure by Letters Patent is:

1. A pop gun comprising a grip with a forward extension, there being a minor barrel section fixed with the grip and terminating adjacent a seat portion toward the extension, a major barrel section medially of its length pivotally mounted on the extension for either end thereof to be swung into said seat portion thereby to align the bores of the respective barrel sections, said minor barrel section having an annular seat therein open toward and in alignment with the major barrel section, and a ramrod extending thru the minor barrel section and having at its end an enlargement adapted to be retracted into said seat to be clear of the major barrel section swinging.

2. A pop gun comprising a grip fixed barrel section, a forward end-for-end-swingably-mounted barrel section, there being a seat adjacent the fixed barrel section having lock engagement with an end of the swingable barrel section to hold the bores of the barrel sections aligned, and a ramrod terminally anchored for limited reciprocation as to the fixed barrel section and retractable thereinto clear of the swingable barrel section.

EDWARD R. CONKLIN.

REFERENCES CITED

The following references are of record in the file of this patent:

UNITED STATES PATENTS

Number	Name	Date
233,613	Gilman	Oct. 26, 1880
399,882	Graydon	Mar. 19, 1889
652,786	Korn	July 3, 1900
964,810	Rieger	July 19, 1910
1,838,999	Mihalyi	Dec. 29, 1931
2,355,809	Lefever	Aug. 15, 1944
43,259	Perry	June 21, 1864
102,434	Renwick	Apr. 26, 1870
63,605	Ballard	Apr. 9, 1867
1,196,035	Semple	Aug. 29, 1916
82,561	Spofford-Raffington	Sept. 29, 1868
183,124	Butterweck	Oct. 10, 1876
1,852,401	DeCamps	Apr. 5, 1932
2,026,898	Jenswold et al.	Jan. 7, 1936