Dec. 8, 1931. C. OTTE 1,835,516

ROPE CINCH

Filed June 2, 1931

FIG. 1.

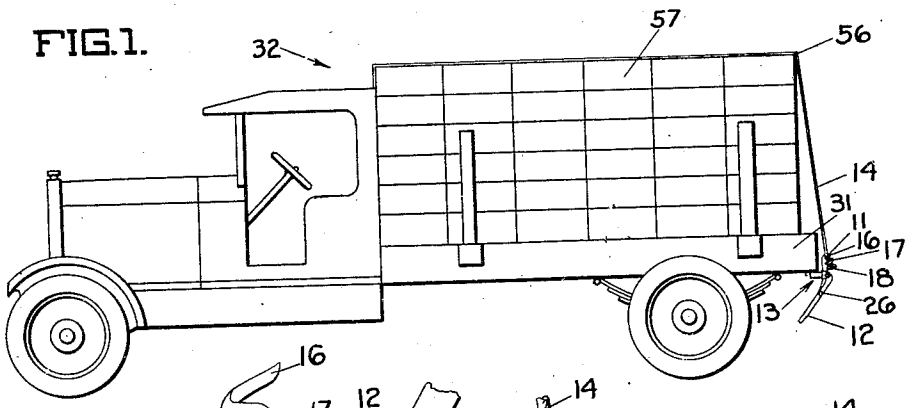

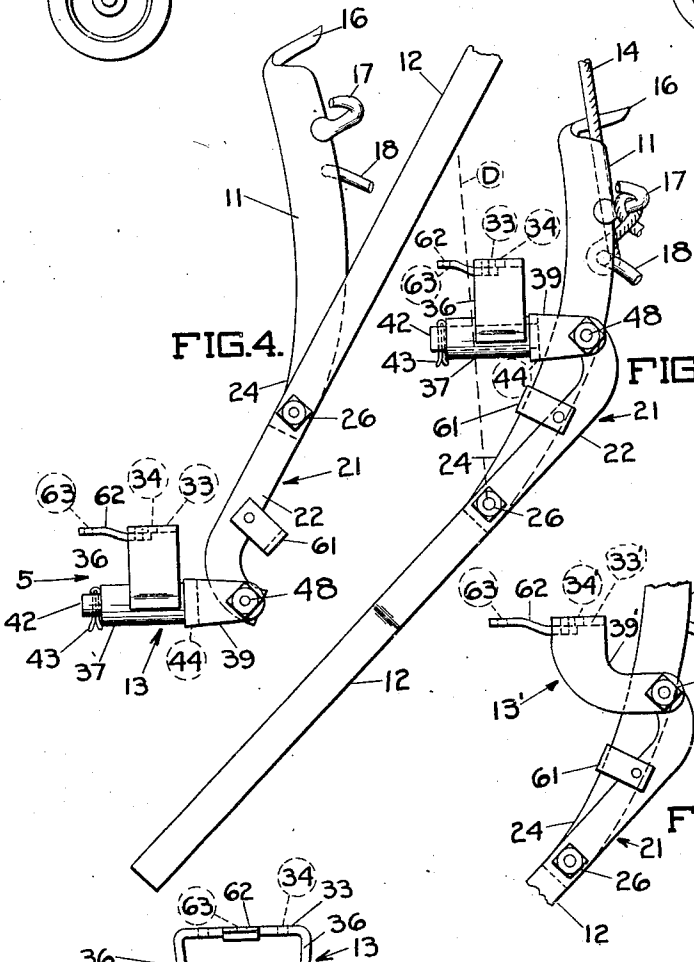

FIG. 4.

FIG. 3.

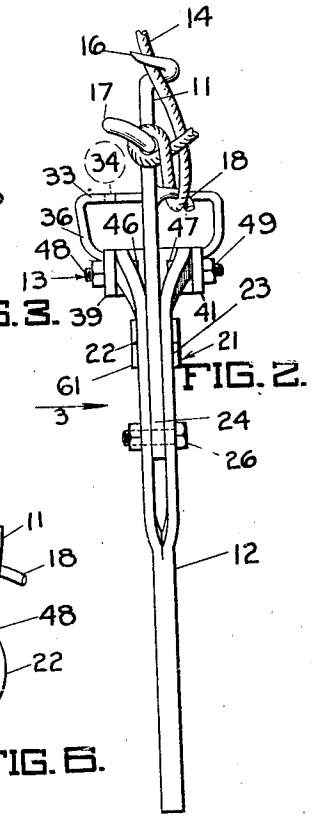

FIG. 2.

FIG. 6.

FIG. 5.

INVENTOR
CLAUS OTTE
BY Hazard and Miller
ATTORNEYS

Patented Dec. 8, 1931

1,835,516

UNITED STATES PATENT OFFICE

CLAUS OTTE, OF ANAHEIM, CALIFORNIA

ROPE CINCH

Application filed June 2, 1931. Serial No. 541,615.

This invention relates to rope tightening devices, and has for an object the provision of a device of this general class embodying certain improvements over the rope cinch forming the subject matter of Patent No. 1,713,238, issued to me on May 14, 1929.

A more detailed object is the provision of a rope cinch wherein the tightening lever is pivotally mounted upon its supporting structure by a swiveled connection which permits the stroke of the tightening lever to be made in a relatively large number of planes, instead of in a vertical plane only, as in the case of my previously patented device, whereby the improved rope cinch will operate efficiently in imposing tension upon a rope, even though the rope does not extend vertically to the tightening device.

Another object is to improve the means of interconnection between the tightening lever and its mounting bracket in such a manner that a materially simplified rope-engaging link may be employed, thereby materially reducing the cost of manufacture of the device without impairing its efficiency of operation.

The invention possesses other objects and advantageous features, some of which, with those enumerated, will be set forth in the following description of the invention's particular embodiments which are illustrated in the drawings accompanying and forming a part of the specification.

Referring to the drawings:

Fig. 1 is a side elevation of a motor truck having a rope cinch embodying the principles of the present invention operatively installed thereupon.

Fig. 2 is an enlarged rear elevation of the rope cinch showing the operative parts thereof in the positions which they assume after the rope has been tightened.

Fig. 3 is a side elevation of the structure illustrated upon Fig. 2, the direction of view being indicated by the arrow 3 of that figure.

Fig. 4 is a view similar to Fig. 3, but showing the parts of the rope cinch moved to their respective positions in which the tension upon the rope is released.

Fig. 5 is an end view of the mounting bracket for the rope cinch, the direction of view being indicated by the arrow 5 of Fig. 4.

Fig. 6 is a view in side elevation, showing a slightly modified form of mounting bracket. Portions of the figure are broken away to reduce its length.

The rope cinch of the present invention comprises in its preferred embodiment a rope-engaging link 11, a tightening lever 12, and a mounting bracket 13. The rope-engaging link 11 is provided with means whereby a rope 14 may be engaged therewith in a very short space of time, and with such a firm grip that slippage of the rope with respect to the link is positively prevented. Preferably, this rope-engaging means is a plurality of aduncate prongs 16, 17 and 18 similar to those described in my previously issued patent mentioned hereinabove, and inasmuch as their specific design forms no portion of the present invention, it will not be necessary to describe them in detail herein.

The tightening lever 12 is bifurcated at one end 21 into two branches 22 and 23, and the bifurcated portion 21 of the lever 12 extends for a material distance from the extreme ends of the branches 22 and 23, so as to receive therebetween the lower end 24 of the link 11. A bolt 26 or its equivalent extends through both branches 22 and 23 of the lever 12, and through the end 24 of the link 11 to pivotally connect the link 11 with the lever 12 at a point spaced a material distance from the axis of pivotal movement of the lever with respect to its mounting bracket 13.

The mounting bracket 13 is adapted to be rigidly mounted upon any suitable supporting structure, such as the frame 31 of a motor truck 32 or other vehicle. For this purpose the bracket 13 is provided with a

flange or plate 33 having preferably a plurality of holes 34 therethrough adapted to receive bolts, lag screws, or the like, whereby the plate 33 may be firmly mounted in operative position. This plate 33 is connected preferably at each end by an extension 36 with a socket 37, welding 38 or its equivalent being employed to secure rigidity in the fastening of the socket 37 to the extensions 36 of the plate 33. A pair of arms 39 and 41 are swivelly mounted by means of a pintle pin 42 which is disposed rotatably within the socket 37. The pin 42 is retained against axial movement with respect to the socket 37 by means of a cotter pin 43 or its equivalent engaging one end of the socket and a shoulder or laterally extending plate 44 rigid with the pin 42 and extending to opposite sides thereof, and engaging the other end of the socket. The arms 39 and 41 extend from adjacent the ends of the plate 44 and are spaced from each other so as to permit the spaced branches 22 and 23 of the lever 12 to be pivotally engaged with the arms 39 and 41, respectively, and disposed therebetween. In fact, the spacing between the arms 39 and 41 is sufficient to accommodate not only the spaced branches 22 and 23, but also the heads 46 and 47 of the bolts 48 and 49, respectively, whereby the branches 22 and 23 are engaged with the arms 39 and 41, and still to leave ample space between the heads 46 and 47 to permit the link 11 to pass therebetween. Hence the lever 12 may be swung downwards from the position illustrated upon Fig. 4 to that illustrated upon Figs. 2 and 3, drawing the link 11 downwards and, as the handle or lever approaches its lower and inner extreme of movement, causing the link 11 to swing between the branches 22 and 23 and between the arms 39 and 41 until it has passed dead center position.

The downward motion of the link 11 with a rope 14 engaged therewith will impose tension upon the rope, as will readily be understood; and the inward motion of the link 11, so as to dispose it between the arms 39 and 41, will place the link and lever in such position that the tension of the rope 14 will serve to prevent inadvertent release of the rope cinching device. The reason for this is that the direction of the pull exerted by the rope 14 against the lever 12 is as indicated by the dashed line D upon Fig. 3, this pull being exerted against the lever 12 at the axis of the bolt 26 whereby the link is engaged with the lever, and extending therefrom toward the point 56 of engagement of the rope 14 with the load 57 which is to be retained upon the truck 32 by the rope. Inasmuch as this line D is disposed inside the axis of the bolts 48 and 49, the pull exerted by the rope tends to swing the lever 12 further inwards toward the truck, and inasmuch as opposite motion of the lever 12 is necessary to permit the link 11 to move upwards and thus relieve the tension upon the rope 14, the device is self-locking so that it cannot become released unless the lever 12 is manually and intentionally moved to releasing position.

The distance through which the lever 12 can move past the dead center position is limited by a loop or U-shaped bracket 61, one end of which is riveted or otherwise firmly attached to each of the brackets 22, 23 of the lever 12. This bracket 61 is adapted to engage the inner edge of the link 11 after the link has been swung past the dead center position, as clearly shown upon Fig. 3, and thus prevent the lever from swinging far enough to relieve the tension which has been imposed upon the rope 14, to any appreciable extent.

Inasmuch as the arms 39 and 41 of the bracket 13 are carried by the pin 42 which is free to rotate about a horizontal axis, it becomes readily apparent that it is not necessary that the rope 14 extend vertically downwards from the point 56 of its engagement with the load 57, to the tightening device. The rope 14 may extend to the tightening device at substantially any angle, i. e., in substantially any plane parallel or substantially parallel to the longitudinal axis of the truck 32, and the lever 12, link 11, and arms 39 and 41 swung in such a manner that the lever 12 moves in the plane of that portion of the rope 14 which extends to the tightening device. Hence the swiveled connection between the lever 12 and the bracket 13 represents one of the details of improvement of the device of the present invention over that of my previously issued patent. Another improvement is in providing two spaced arms 39 and 41 between which the link 11 passes to its rope-tightening position, instead of providing an eye upon the link 11, as in the case of my previously patented device, which must pass over a projecting lug on the mounting bracket in order to move past its dead center position. Hence, the device of the present invention is stronger and of simpler construction, with the result that it may be produced more economically.

An extension 62 from the plate 33 of the bracket 13 makes it possible to provide an additional hole 63 through which another fastening bolt or like screw may extend into the frame or body 31 of the truck 32, thereby adding materially to the rigidity of mounting of the bracket 13.

Fig. 6 shows a slightly modified form of bracket, wherein the swiveled connection is omitted. Instead, a plate 33′ is provided with a pair of spaced arms 39′ rigid with the plate 33′ and between which the branches 22 and 23 of the tightening lever 12 are disposed. This type of mounting bracket 13′

permits of the use of the same design of lever 12 and link 11 as that described hereinabove.

It is to be understood that the details of the invention as herein disclosed, are subject to alteration within the spirit or scope of the appended claims.

I claim:

1. In a rope cinch, a bracket adapted to be secured to a supporting structure and provided with a socket, a pin disposed rotatably within said socket, a pair of spaced arms carried by said pin, a lever pivoted to said arms, and means carried by said lever engageable with a rope to be tightened.

2. In a rope cinch, a bracket adapted to be secured to a supporting structure and provided with a socket, a pin disposed rotatably within said socket, a pair of spaced arms carried by said pin, a lever bifurcated at one end, axially alined means pivotally connecting each branch of said lever to one of said arms, and means carried by said lever engageable with a rope to be tightened.

3. In a rope cinch, a bracket adapted to be secured to a supporting structure and provided with a socket, a pin disposed rotatably within said socket, a pair of spaced arms carried by said pin, a lever bifurcated at one end, axially alined means pivotally connecting each branch of said lever to one of said arms, and means carried by said lever engageable with a rope to be tightened, said engageable means being adapted to move into the space between said arms and past the axis of said connecting means.

4. A rope cinch comprising a bracket adapted to be secured to a supporting structure, a pair of spaced arms swiveled to said bracket and extending outwards from said structure, a lever bifurcated at one end, axially alined means pivotally connecting each branch of said lever to one of said arms, a link pivoted to said lever at a point spaced from said connecting means and adapted to move into the space between said arms and past the axis of said connecting means, and means for attaching a rope to said link.

5. A rope cinch comprising a bracket adapted to be secured to a supporting structure, an arm mounted upon said bracket for pivotal movement, a lever pivoted to said arm for pivotal movement about an axis perpendicular to that of said arm, and means carried by said lever engageable with a rope to be tightened.

6. A rope cinch comprising a bracket adapted to be secured to a supporting structure, an arm mounted upon said bracket for pivotal movement, a lever pivoted to said arm for pivotal movement about an axis perpendicular to that of said arm, a link pivoted to said lever at a point spaced from the axis of pivotal movement of the lever, and means for engaging a rope with said link.

7. A rope cinch comprising a bracket adapted to be secured to a supporting structure, an arm mounted upon said bracket for pivotal movement, a lever pivoted to said arm for pivotal movement about an axis perpendicular to that of said arm, a link pivoted to said lever at a point spaced from the axis of pivotal movement of the lever, and a plurality of prongs rigid with and extending from said link and adapted to be engaged by a rope to be tightened.

In testimony whereof I have signed my name to this specification.

CLAUS OTTE.