United States Patent [19]

Lockard

[11] **3,818,155**

[45] **June 18, 1974**

[54] **ZERO SETTING MECHANISM FOR PLURAL GANGED THUMBWHEEL COUNTER SWITCHES**

[75] Inventor: **Joseph Larue Lockard,** Harrisburg, Pa.

[73] Assignee: **AMP Incorporated,** Harrisburg, Pa.

[22] Filed: **Apr. 17, 1973**

[21] Appl. No.: **351,944**

Related U.S. Application Data

[63] Continuation-in-part of Ser. No. 262,394, June 13, 1972, abandoned.

[52] **U.S. Cl.**..... **200/18,** 200/11 TW, 200/17 R, 235/144 R

[51] **Int. Cl.** **H01h 3/00**

[58] **Field of Search** ..... 200/11 TW, 17 R, 18, 156; 235/103, 117 R, 117 A, 132, 144 R

[56] **References Cited**

UNITED STATES PATENTS

3,061,191	10/1962	Hultgren	200/11 TW UX
3,288,950	11/1966	Ashman	200/11 TW
3,555,211	1/1971	Silverman et al.	200/11 TW X
3,687,397	8/1972	Suzuki et al.	200/11 TW X

Primary Examiner—James R. Scott

Attorney, Agent, or Firm—Gerald K. Kita

[57] **ABSTRACT**

A manually shiftable lever pivots a rack into engagement with a pinion and simultaneously releases a plurality of individual number wheels from their associated spring biased thumb wheels within an array of modular thumb wheel switch assemblies and permits by depression of the lever, pinion rotation of all of the number wheels to reset position, with minimum resistance.

26 Claims, 22 Drawing Figures

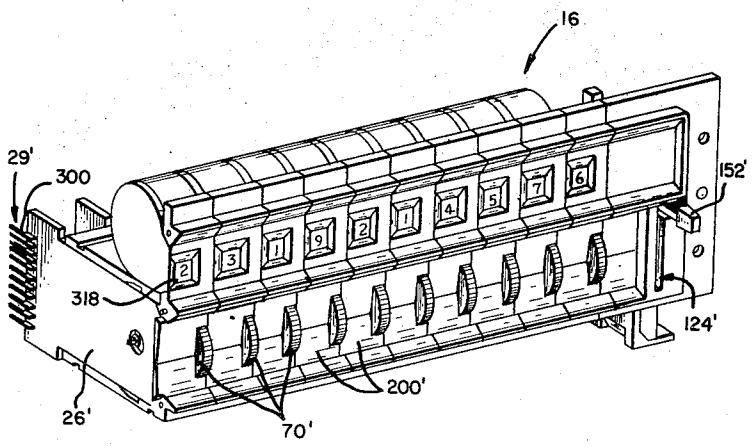

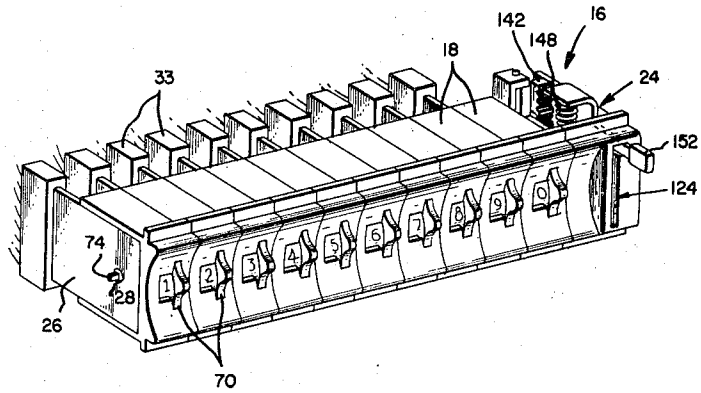

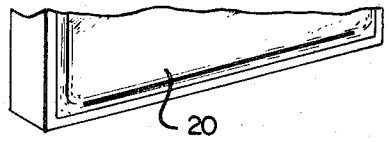
20

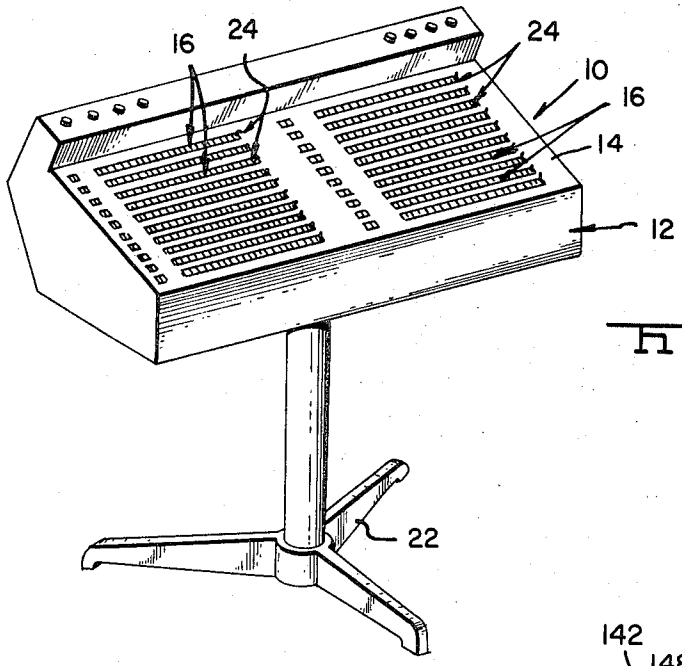
16
24
24
10
16
14
12
22

Fig. 1

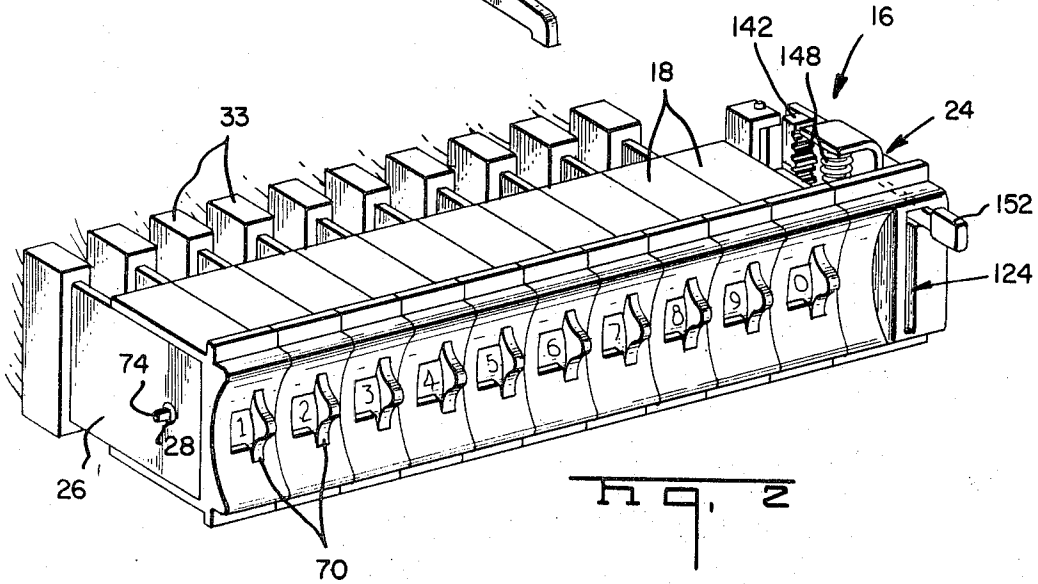
142
16
148
18
33
24
152
124
74
28
26
70
1
2
3
4
5
6
7
8
9
0

Fig. 2

Fig. 3

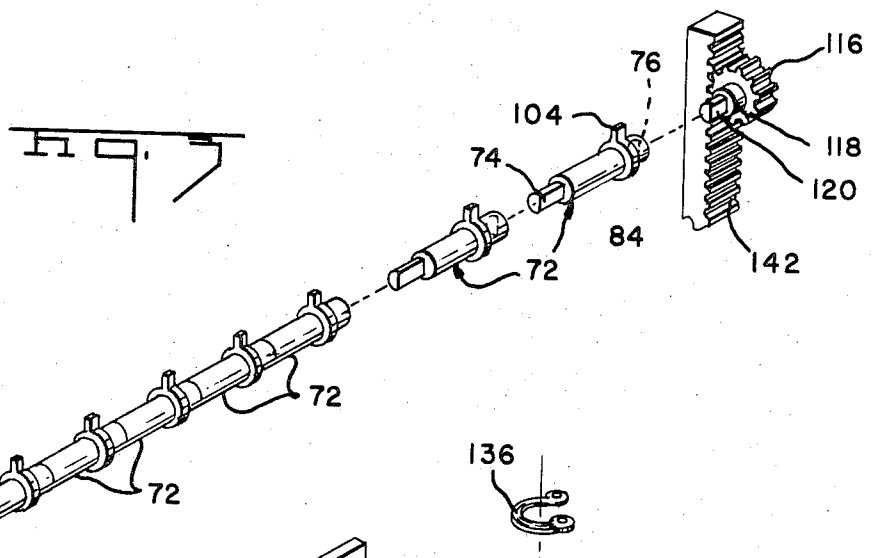
76
116
104
118
74
120
84
142
72
72
72

Fig. 4

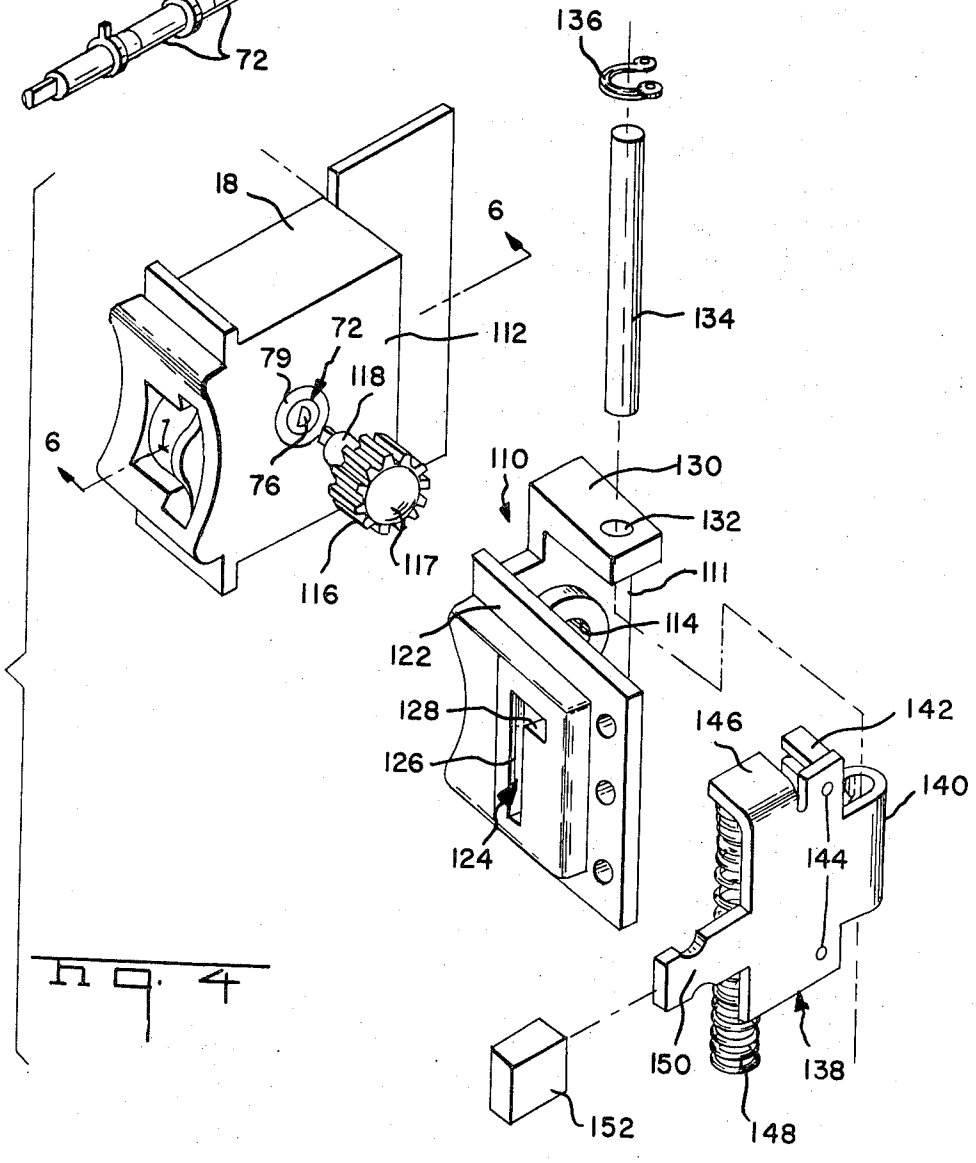
136
18
6
134
72
112
79
118
6
110
130
76
132
117
111
116
114
122
128
146
142
126
140
124
144
150
138
152
148

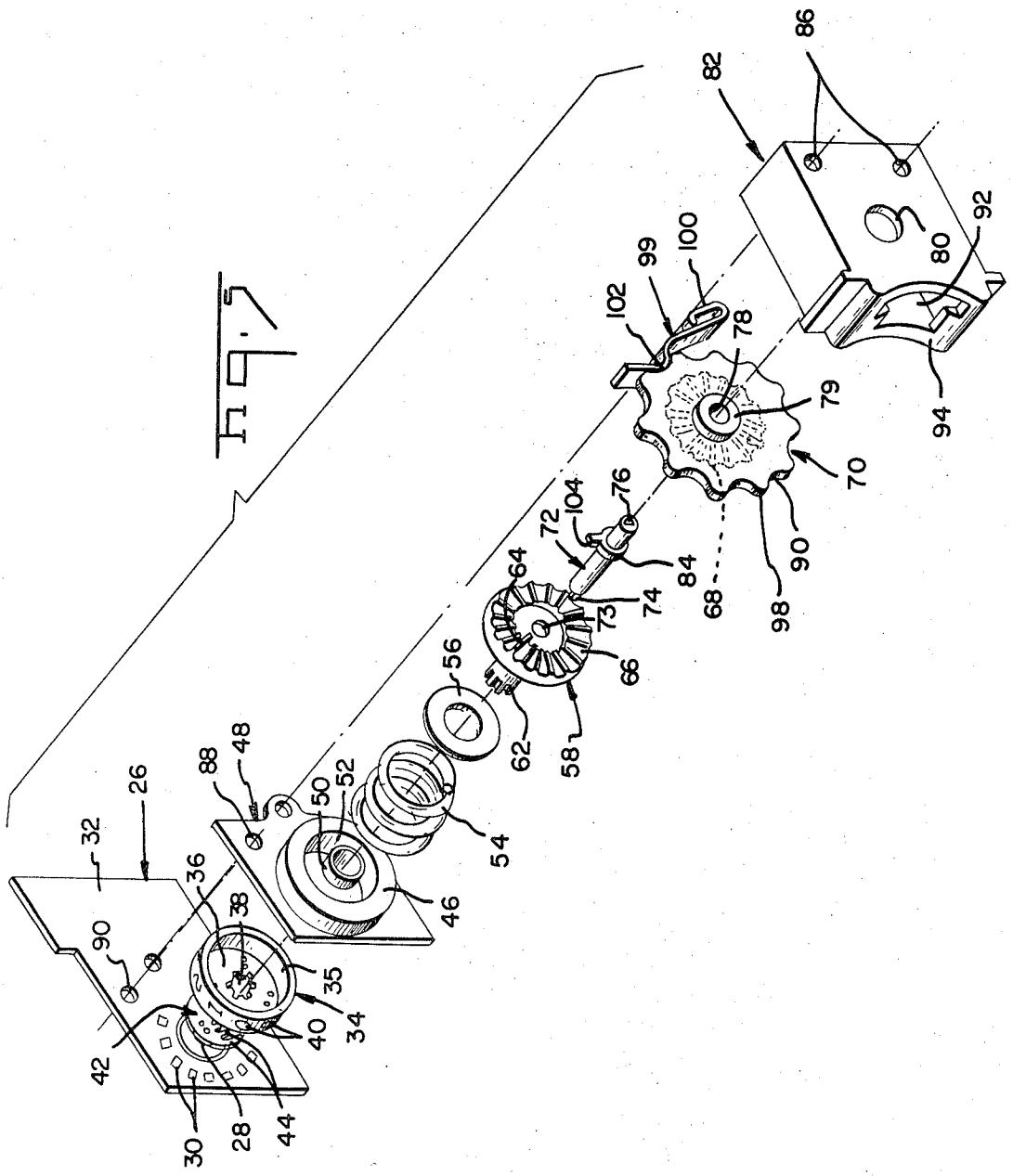
26
32
36
38
90
35
34
40
42
30
28
44
88
48
50
52
46
54
56
62
58
64
73
66
72
104
76
74
84
68
98
90
70
79
78
102
99
100
82
86
80
92
94

Fig. 5

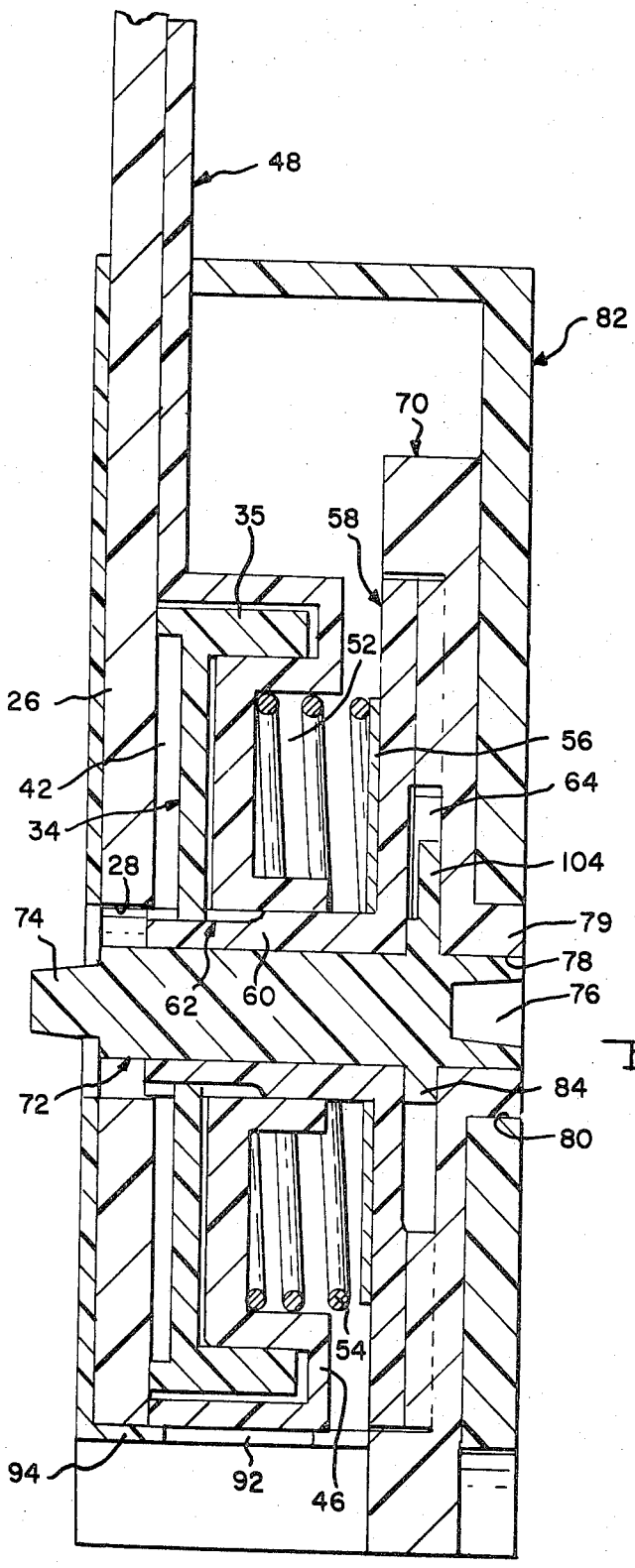
48
82
70
35
58
52
26
56
42
64
34
104
28
79
74
78
62
60
76
72
84
80
54
94
92
46

Fig. 6

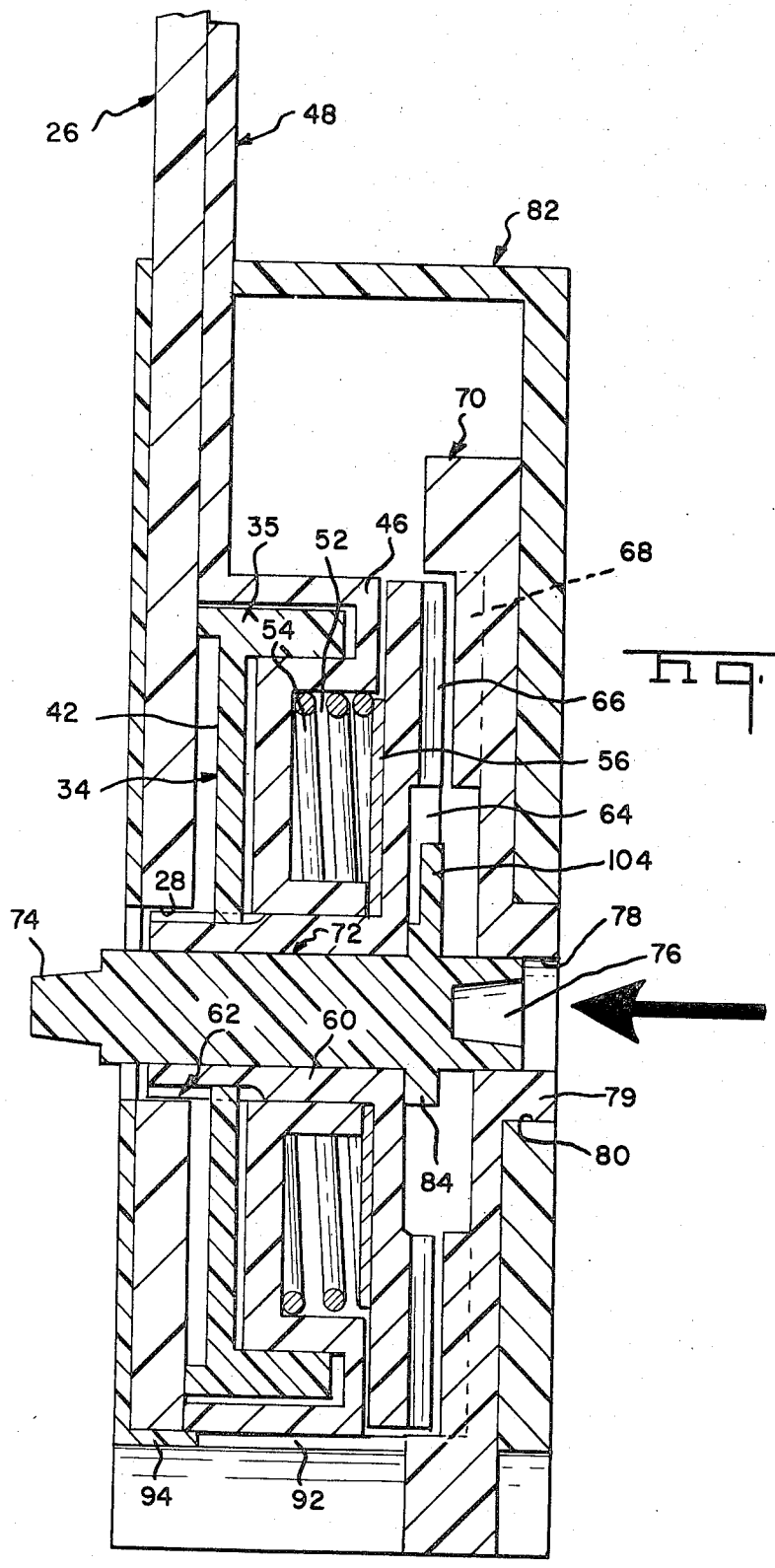
26
48
82
70
35
52
46
68
54
66
42
56
34
64
104
28
74
72
78
76
62
60
79
80
84
94
92

Fig. 7

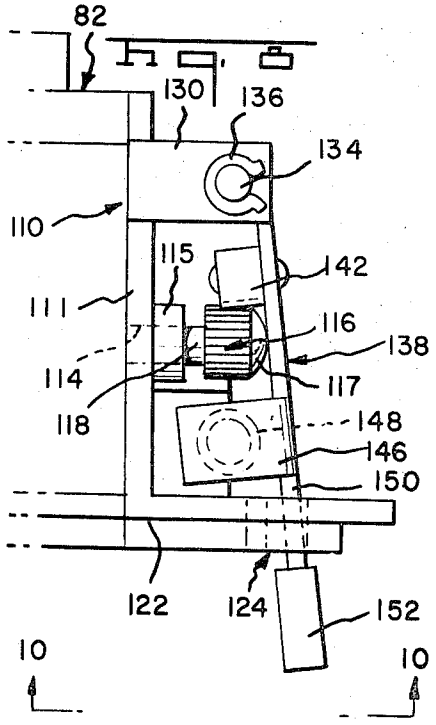
82
130
136
134
110
115
142
111
116
138
114
117
118
148
146
150
122
124
152
10
10

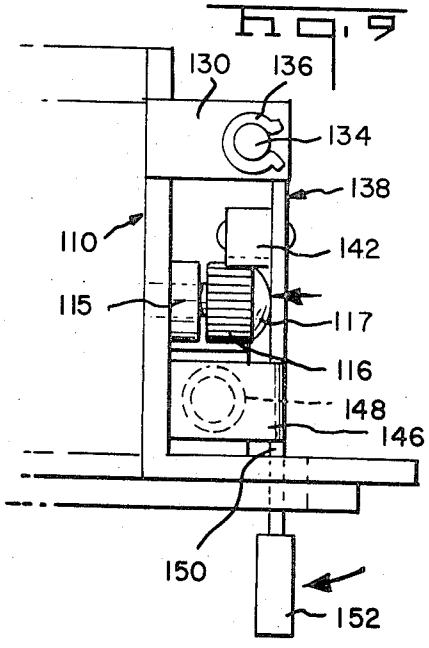
130
136
134
138
110
142
115
117
116
148
146
150
152

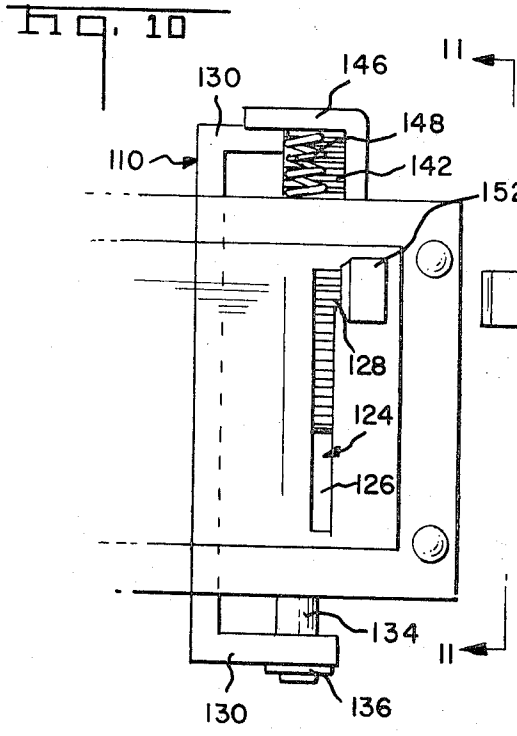
130
146
11
148
110
142
152
128
124
126
134
11
130
136

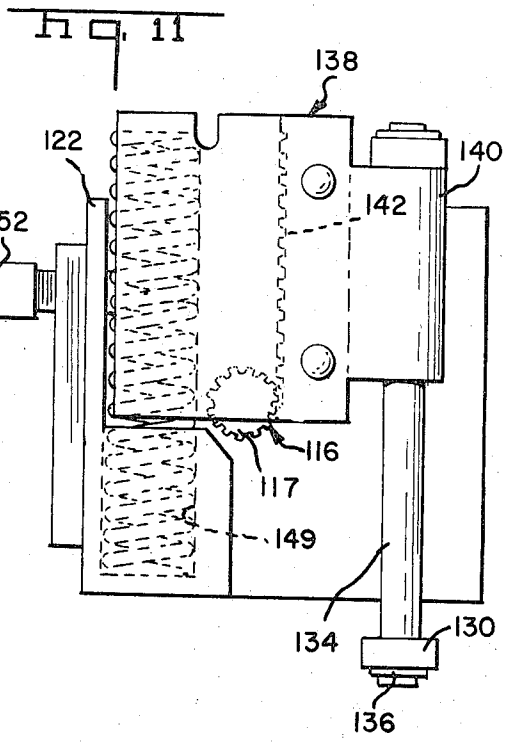
138
122
140
142
152
116
117
149
134
130
136

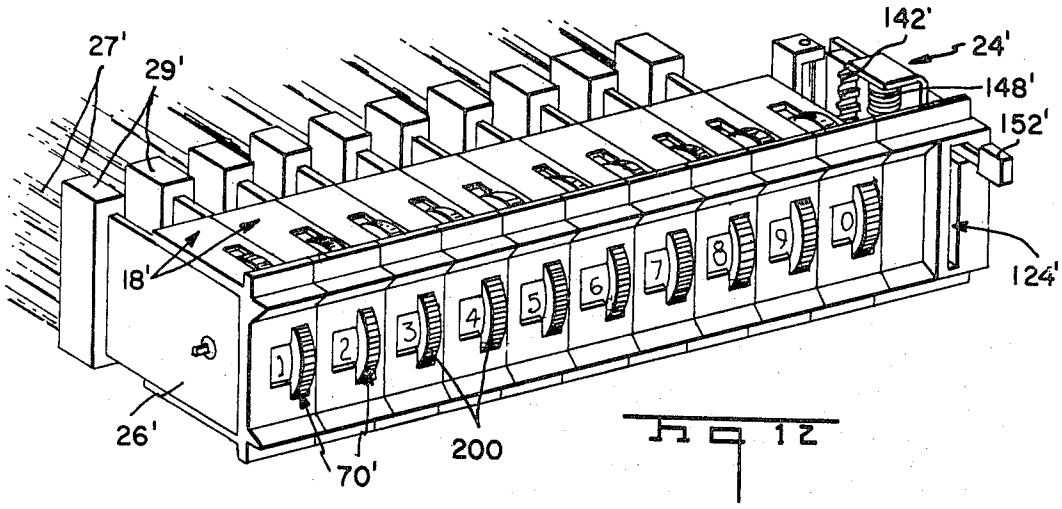
27'
29'
142'
24'
148'
152'
18'
124'
26'
70'
200

Fig. 12

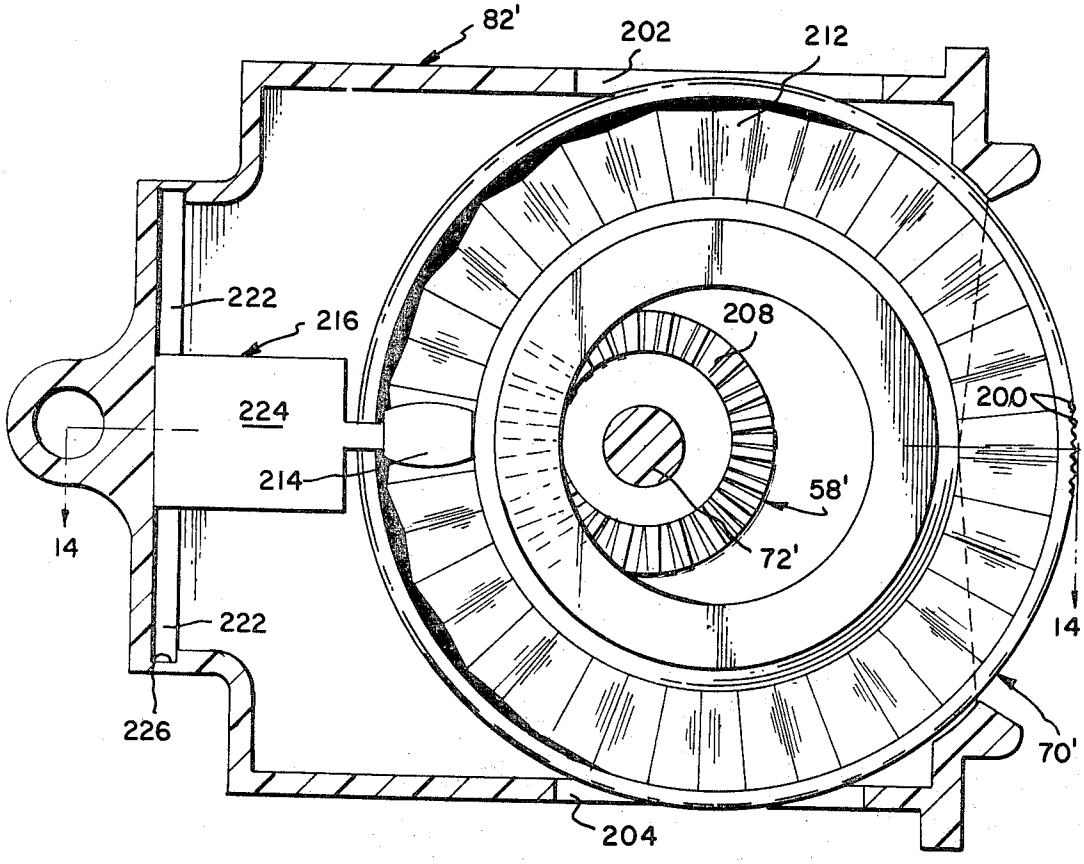
82'
202
212
222
216
208
200
224
214
58'
72'
14
14
222
226
70'
204

Fig. 13

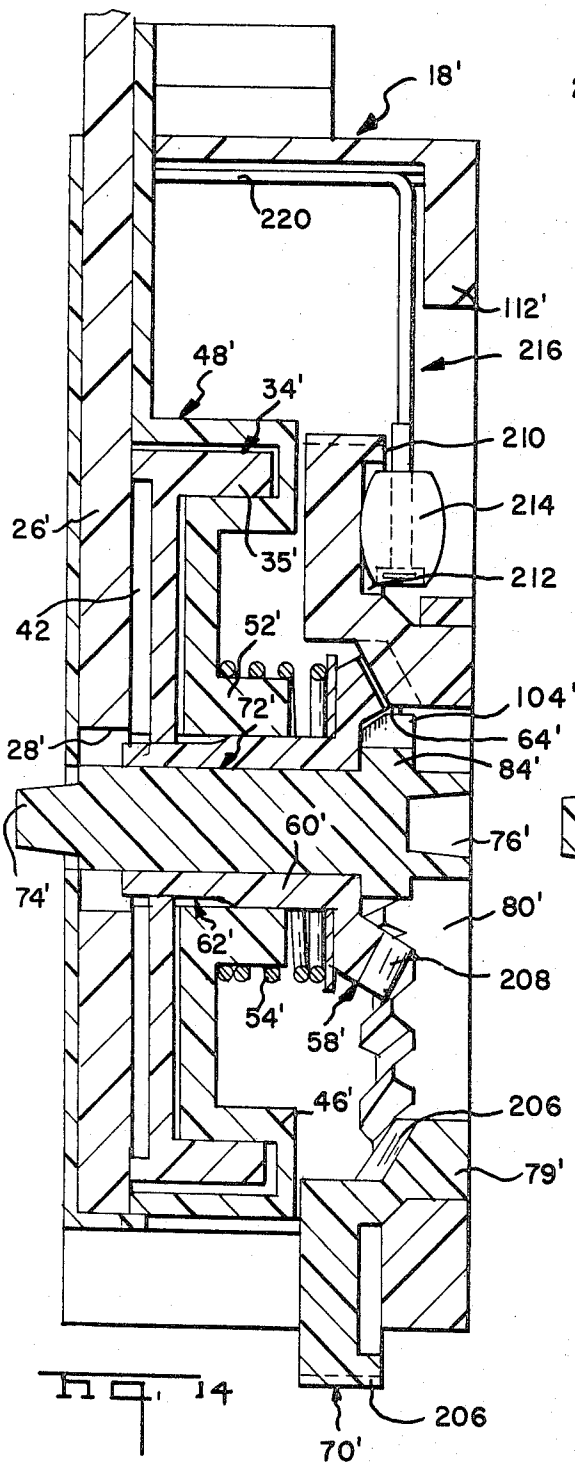
18'
220
112'
48'
216
34'
210
214
26'
35'
212
42
52'
72'
104'
64'
28'
84'
60'
76'
74'
80'
62'
208
54'
58'
46'
206
79'
70'
206

Fig. 14

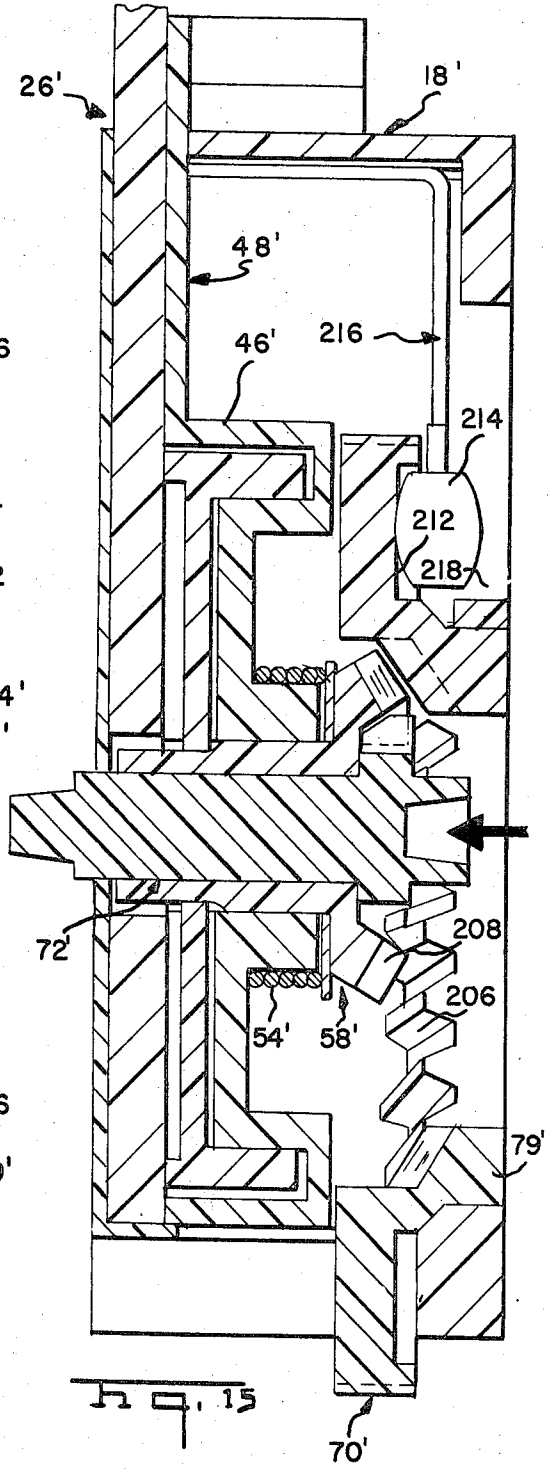
26'
18'
48'
46'
216
214
212
218
72'
208
206
54'
58'
79'
70'

Fig. 15

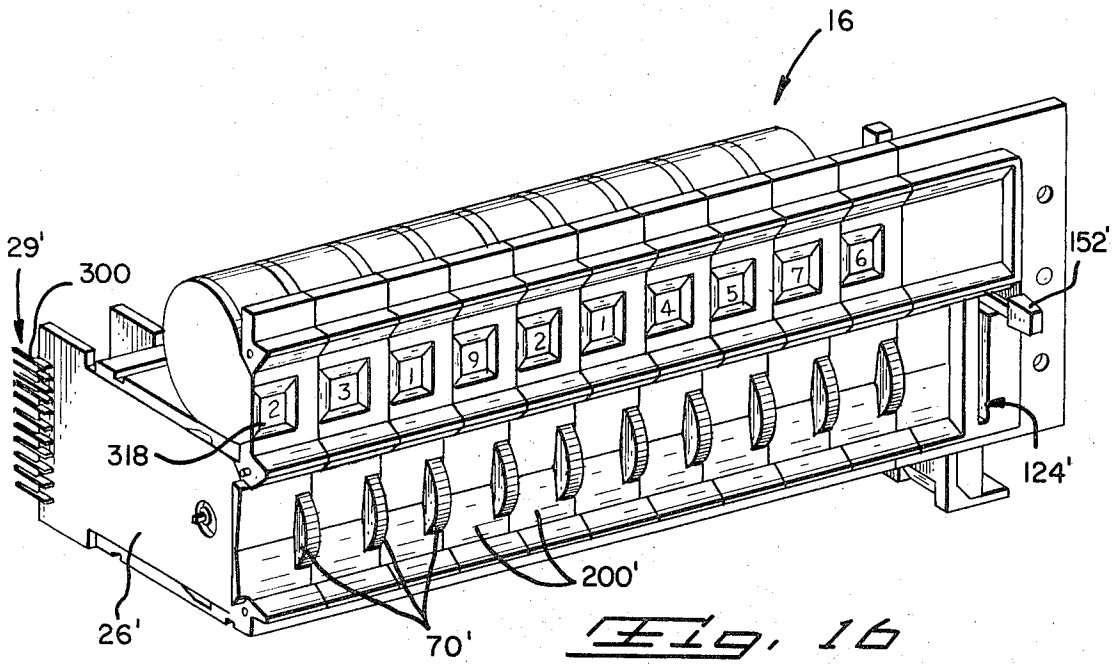

Fig. 16

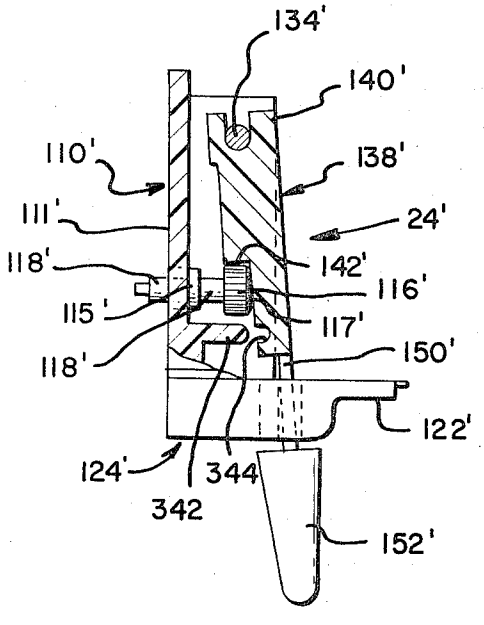

Fig. 17

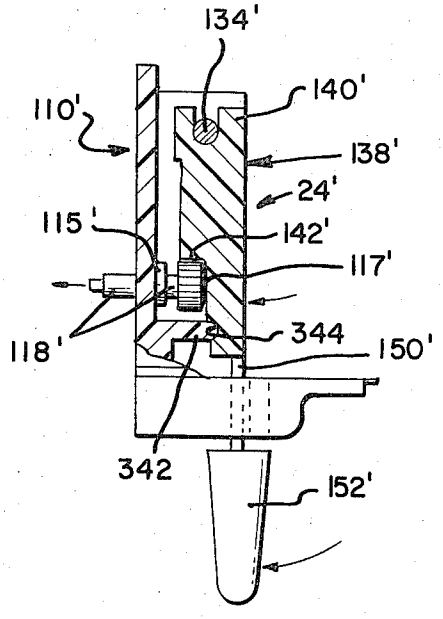

Fig. 18

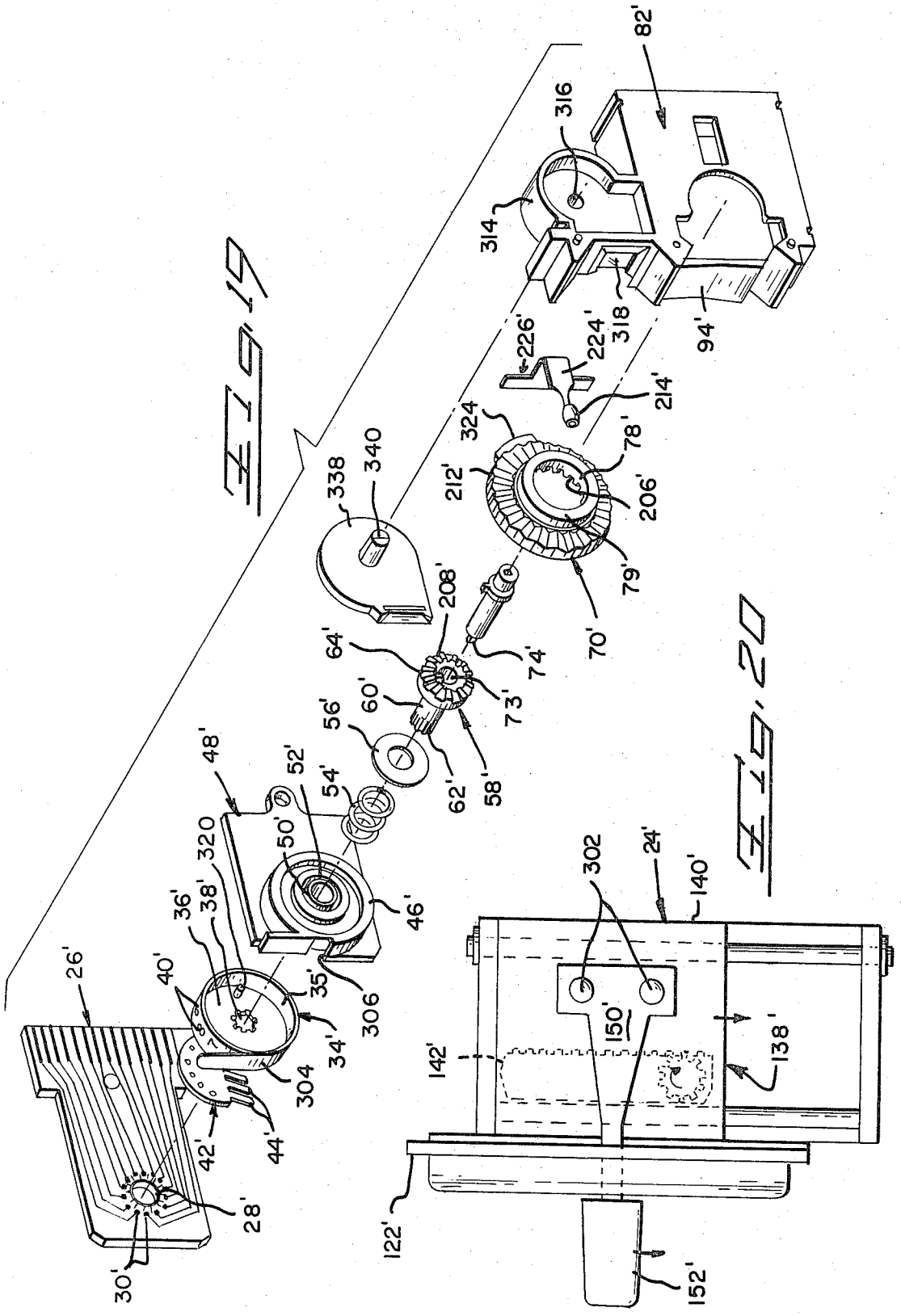
FIG. 19
FIG. 20
82'
316
314
318
94'
226'
224'
214'
324
212'
78'
206'
79'
70'
338
340
208'
64'
74'
73'
60'
56'
62'
58'
48'
52'
54'
50'
320
36'
38'
40'
46'
35'
306
34'
304
42'
44'
26'
28'
30'
302
24'
140'
150'
142'
138'
122'
152'

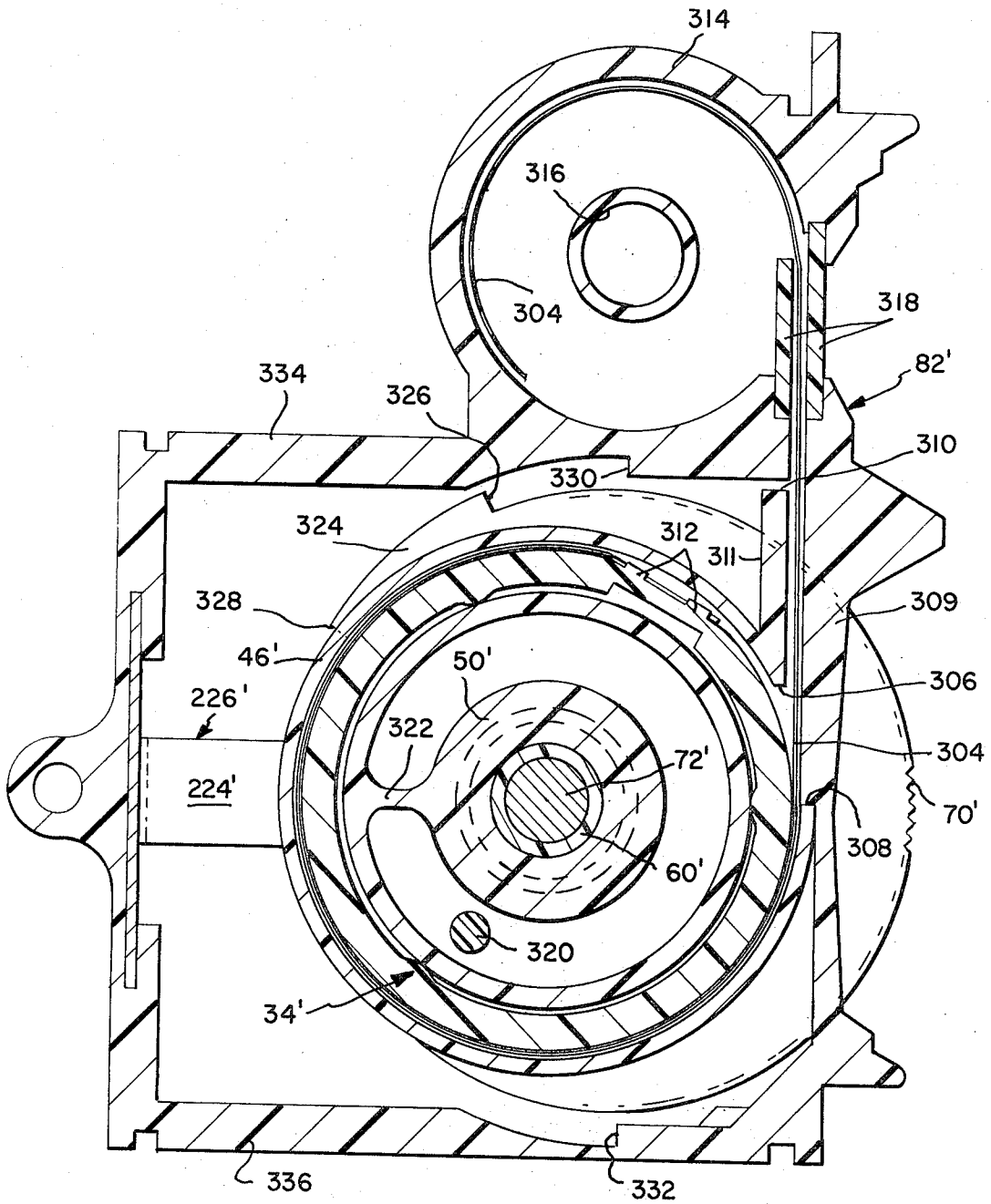
314
316
304
318
82'
334
326
310
330
324
312
311
328
309
46'
50'
306
226'
322
72'
304
224'
70'
308
60'
320
34'
336
332

Fig 21

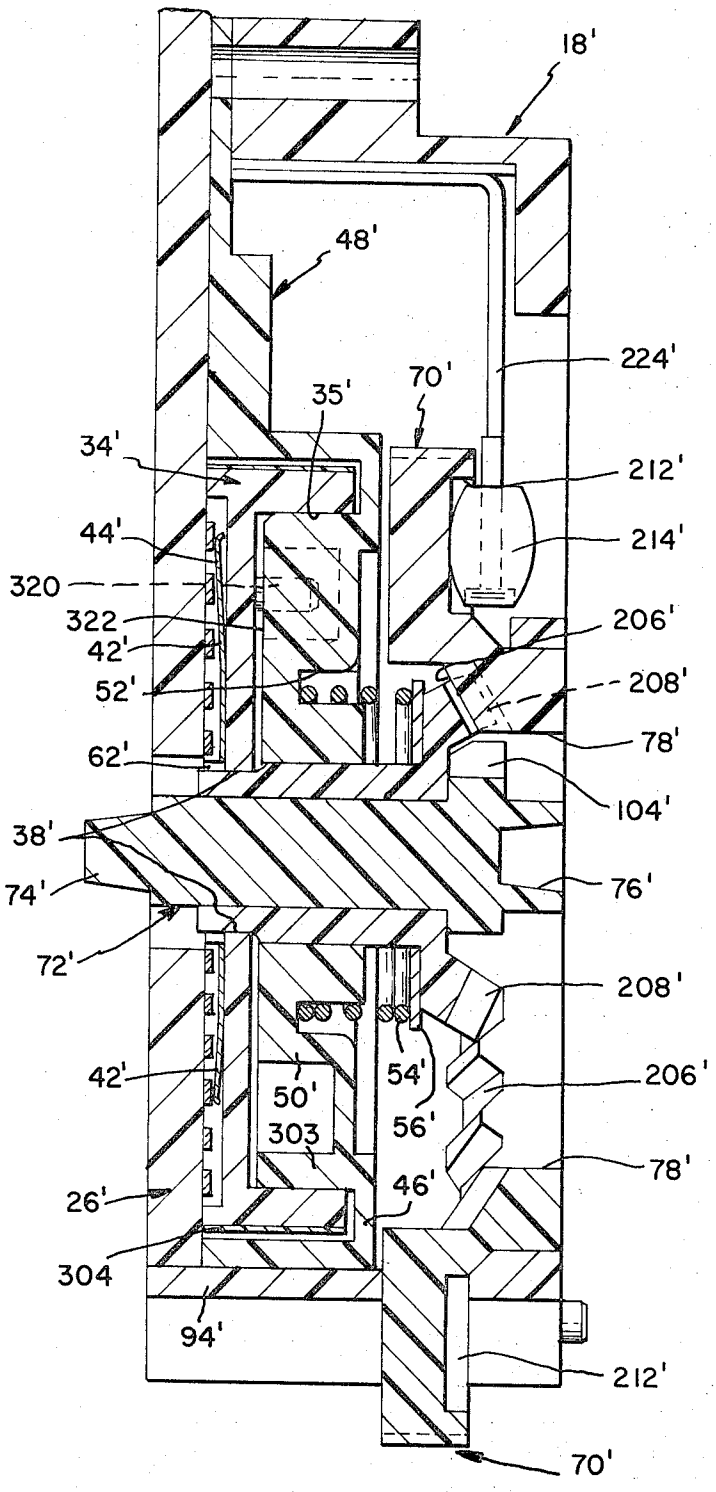
18'
48'
224'
70'
35'
34'
212'
44'
214'
320
322
206'
42'
208'
52'
78'
62'
104'
38'
74'
76'
72'
208'
42'
54'
206'
50'
56'
303
78'
46'
26'
304
94'
212'
70'

Fig. 22

ZERO SETTING MECHANISM FOR PLURAL GANGED THUMBWHEEL COUNTER SWITCHES

CROSS-REFERENCE TO RELATED APPLICATION

This application is a continuation-in-part of application Ser. No. 262,394, filed June 13, 1972, and now abandoned.

BACKGROUND OF THE INVENTION

1. Field of the Invention

This invention relates to thumb wheel switches, and more particularly to a multiple series of axially aligned, modular thumb wheel switch assemblies which have the capability of being commonly reset.

2. Description of the Prior Art

Thumb wheel switches have been grouped into stacks or arrays of axially aligned individual switch assemblies with individual rotatable thumb wheels projecting from parallel faces permitting individual switch position selections for each modular switch unit by rotation of the thumb wheel associated therewith. In that manner, individual electric circuits corresponding to the rotary position of the thumb wheel are completed by number wheels which indicate visually through a window carried by each unit, the selected switch position. In order to retain the thumb wheel in selected position and to prevent accidental rotation to a non-desired position, detent means such as leaf springs have been employed for engagement with the thumb wheel or with an associated rotary element. Where the number of switches in an axial array are relatively large, it is a rather tedius and time consuming process to rotate each thumb wheel to reset position, particularly where such reset setting is resisted by the force of the detent spring acting on the thumb wheel or an associated rotary mechanism. Where the switch assemblies are stacked in longitudinally extending arrays, attempts to reset all of the switches simultaneously necessarily require a mechanism capable of overcoming the bias of all of the detent springs for each array. This force is considerable, and where a relatively large number of switches are involved, may result in damage to the individual switch assemblies or to the mechanism achieving reset operation.

Further, where resetting occurs by the simple expedient by manually rotating each thumb wheel to reset or zero position or where a common mechanism is employed to reset all of the switches against the composite bias of all of the detent springs, inadvertent resetting has occurred at times where reset operation is not desired much to the detriment of the operator.

SUMMARY OF THE INVENTION

The present invention is directed to an improved resettable thumb wheel switch assembly for use in a multiple axially stacked switch array, and, in particular, the employment of twenty-one switch arrays in multiple row form within a console for permitting the visual display of information pertaining to the bowling scores of a plurality of bowlers and wherein a single axially extending array of resettable thumb wheel switch assemblies are provided for each bowler within the face of the console, and wherein visual information relative to each switch position may be readily seen at a glance on a screen or other monitor under control of the console.

In particular, each thumb wheel switch assembly of the present invention comprises a planar, printed circuit board with a wheel cover overlying the board and having edge portions in fluid sealed, flush position therewith. An annular projection within the wheel cover extends away from the plane of the edge portions, and a cup-shaped number wheel is positioned within the projection for rotation therein. A contact brush is fixed to the base of the cup-shaped wheel and faces the printed circuit board to selectively contact fixed conductors carried by said printed circuit board during number wheel rotation. A concentric, cylindrical, sleeve bearing is integrally formed with the wheel cover and defines an annular pocket between the sleeve bearing and the annular projection. A coil spring is carried within the pocket in contact with the wheel cover at one end and one side of a circular clutch plate. The circular clutch plate includes an axially projecting stem coaxially carried within the sleeve bearing which also concentrically carries the coil spring. The number wheel is splined to the projecting end of the stem and rotates therewith. A reset shaft projects through the clutch plate and the stem, and a disc-like thumb wheel is rotatably mounted on the reset shaft and carries spline means on the face opposing the clutch plate which mates with similar spline means thereon. The coil spring biases the clutch plate axially into splined engagement with the thumb wheel for mutual rotation therewith. Spring detent means contact the thumb wheel to resist rotation thereof, and a thrust collar is carried by the reset shaft which contacts the clutch plate on the side opposite that of the coil spring, such that axial shifting of the reset shaft in a direction against the bias of the coil spring permits the number wheel to rotate irrespective of the thumb wheel to achieve resetting of the thumb wheel without the need to overcome the detent spring force.

The thrust collar carries a radially projecting reset spoke which contacts an axially and radially extending tooth of the splined clutch plate to effect resetting of the number wheel and to limit rotation of the number wheel to one full turn. A generally rectangular housing overlies the assembly with its edges conforming generally to those of the wheel cover and one end of the printed circuit board. The housing end wall and the printed circuit board has aligned openings within which respective ends of the reset shaft reside. A window within the front face of the housing permits viewing of the number wheel and allows a portion of the thumb wheel periphery to project, permitting manual rotation of the thumb wheel to a selected switch position.

Preferably, a plurality of the improved resettable thumb wheel switch assemblies are stacked together by means of the housings in a longitudinal array with the axes of the reset shafts aligned. Each reset shaft includes an irregular axial projection at one end and an irregular axial recess conforming thereto within the other end, to commonly couple the switch assemblies together in stacked or arrayed fashion. A pinion gear has a projecting end received within the irregular recess of the reset shaft associated with the end thumb wheel switch assembly of each array and a reset mechanism is fixed with respect thereto. The reset mechanism is provided with a pivotable lever mounted on a support shaft at right angles to the reset shaft axis. The lever is

shiftable in the axial direction of the support shaft and rotates about the shaft axis, and carries a fixed rack which is engageable with the pinion for rotating the same to the extent necessary to reset all of the number wheels of each switch assembly. The lever includes a projection mounted within an L-shaped guide slot and a return spring biases the lever to one end of the mounting shaft. The bias of the coil springs of each individual switch assembly bias the lever in non-rack and pinion engaging position. Pivoting of the lever about the shaft pivot axis engages the rack with the pinion and forces the pinion inwardly to press the axially engaging reset shaft shifting all the reset shafts of the array to disengage the thumb wheels from their clutch plates for all of the switch assemblies. Depression of the lever against a return spring forces the rack to rotate the pinion, to reset all of the released number wheels for the switch array.

In an alternate embodiment, through a gear reduction drive, rotation of the thumb wheel through a given arc causes a larger arc rotation of the number wheel for accelerated switch position changing.

BRIEF DESCRIPTION OF THE DRAWINGS

FIG. **1** is a perspective view illustrating the application of the improved multiple unit thumb wheel switch array of the present invention to a bowling score mechanism in console form.

FIG. **2** is a perspective view of the improved modular thumb wheel switch array of the present invention of the type forming a portion of the console of FIG. **1**, and its associated reset mechanism.

FIG. **3** is a partially exploded, diagrammatic view illustrating the individual reset shaft contained in each switch module, their relationship to each other and to a portion of the reset mechanism.

FIG. **4** is a perspective, exploded view illustrating the components of the reset mechanism and its relationship to the end switch assembly associated therewith.

FIG. **5** is an exploded, perspective view of a typical modular switch assembly of the present invention, in one form.

FIG. **6** is a sectional view, taken along line **6—6** of FIG. **4** showing the internal assembly of the switch module of FIG. **5.**

FIG. **7** is a similar view to that of FIG. **6,** but showing the position of the parts when the drive splines are separated by the pressure from the reset mechanism.

FIG. **8** is a top plan view of the reset mechanism shown in FIGS. **2** and **4.**

FIG. **9** is a view similar to that of FIG. **8** but showing the mechanism in resetting position.

FIG. **10** is a side, elevational view looking in from lines **10—10** of FIG. **8.**

FIG. **11** is an end view from lines **11—11** of FIG. **10.**

FIG. **12** is a perspective view of an alternate embodiment of the multiple switch assembly of the present invention.

FIG. **13** is a partial section, in plan view, partially in section, of the embodiment of FIG. **12** showing the gear reduction arrangement and the detent mechanism.

FIG. **14** is a sectional view taken about lines **14—14** of FIG. **13,** showing the internal mechanism of the switch assembly of FIG. **12.**

FIG. **15** is a similar view to that of FIG. **14** but showing the parts in resetting position.

FIG. **16** is a perspective illustrating an array of switch assemblies comprising an alternative embodiment according to the present invention.

FIGS. **17** and **18** are enlarged fragmentary sections of the reset mechanism for the array illustrated in FIG. **16.**

FIG. **19** is an enlarged exploded perspective of the component parts of an exemplary switch assembly in the array illustrated in FIG. **16.**

FIG. **20** is an enlarged fragmentary elevation of the reset mechanism for the array illustrated in FIG. **16.**

FIG. **21** is an enlarged elevation in section of a switch assembly in the array illustrated in FIG. **16** and more particularly illustrating the details of the indicia wheel of the switch assembly.

FIG. **22** is an enlarged plan in section of a switch assembly of the array shown in FIG. **16,** illustrating the details of the thumb wheel, number wheel and reset mechanism.

DESCRIPTION OF PREFERRED EMBODIMENTS

The present invention has particular application to an automated score keeper for use in bowling and although its applications are not limited thereto, this constitutes a means of illustrating the uniqueness of the present invention, as best seen in FIG. **1.** In that respect, a bowling score system input is in console form as at **10,** comprising an irregular rectangular housing **12** which has an inclined upper panel **14** which supports a plurality of spaced, parallel, longitudinal thumb wheel switch arrays constituting one aspect of the present invention. Each modular thumb wheel switch assembly **18** is individually manually operated by the score keeper and the information pertinent to the same is visually displayed on the ceiling hung monitor, of conventional construction, which may comprise a television screen, and which is responsive to switch operation to constantly indicate the changing bowling scores of the individual bowlers. Each line or array **16** of switches relates to a single bowler and, as indicated, 20 such bowling scores may be changeably displayed. In that respect, the switch assemblies **18** for each array or assembly may constitute twenty-one in number, with two switches being available for handicap purposes. Information is displayed which is constantly changing depending upon the switch selection position for each of the switch assemblies **18** on the ceiling hung monitor **20.** A triad support **22** supports the console at a position permitting the operator or operators to readily vary the switch position as the bowling game progresses. The present invention relates particularly to the individual modular switch assemblies **18** and to the common reset mechanism **24** which is operatively associated with each switch array at either the right hand or left hand end and commonly resetting all of the switches.

Reference to FIGS. **2 – 11** inclusive illustrates one embodiment of the individual, improved, modular thumb wheel switch assembly of the present invention, the longitudinal extending switch array format thereof and the reset mechanism for commonly setting all of the modular switch assemblies in a common manner.

Turning to FIG. **5,** each of the modular switch assemblies **18** is essentially supported by a planar, generally rectangular printed circuit board **26** which is provided with an opening or hole **28** about which are carried a plurality of individual printed circuit stationary switch

contacts **30**, leading to the right hand edge **32** of the printed circuit board for connection by means of edge connector **33** to display circuitry, associated with the ceiling hung monitor **20**. A number wheel **34** is provided for each module switch assembly **18** comprising a cup shaped member having an end wall or base **36** which is apertured at **38** within the center of the same and a circular side wall or ring **35**. Numerals or like indicia as at **40** are provided on the outer periphery of the number wheel rim and the end face **36**, on the side facing the printed circuit board **26**, is provided with a contact brush **42** formed of conductive metal and which rotates with the number wheel **34**, being fixed thereto by means of rivets or the like. The various contact fingers **44** make selective contact with the various stationary contacts **30** such that signals emanate from the assembly indicative of the switch position. The number wheel **34** is confined to rotate within an annular recess formed by an annular projection **46** within a planar wheel cover **48** formed of electrically insulative material such as plastic. The wheel cover **48** includes planar edge portions which surround the number wheel **36** and sealingly contact one face of the printed circuit board **26**. The wheel cover may be of clear plastic or may in fact have a clear plastic peripheral face on projection **46** such that the indicia **40** carried on the periphery of the number wheel may be readily viewed through the annular projection **46**. Integrally formed with the wheel cover **48** is a cylindrical inner projection or sleeve bearing **50** and which forms in conjunction with the annular projection **46**, an annular pocket **52** within which resides a metal coil or clutch spring **54** and associated thrust washer **56** which concentrically surround the sleeve bearing **50**. Coil spring **54** biases a circular clutch plate **58** which is provided with a cylindrical hollow stem **60** which may be integral therewith, and which extends axially away from the side of the clutch plate, facing the printed circuit board **26**. Stem **60** makes a splined connection with the number wheel **34** and causes the number wheel **34** to rotate therewith. The stem **60** projects through the sleeve bearing **50** to mount the number wheel for rotation about a common axis while at the same time supporting the clutch plate **58** for rotation about said axis. The clutch plate **58** is uniquely keyed to wheel **34** through the spline mechanism **62** so as to rotate the number wheel in a definite relationship, limited by a relatively large tooth or stop **64** on one face of the clutch plate. Plate **58** is further splined at **66** so as to mate with spline **68** carried on the inside face of the disclike thumb wheel **70**.

The single, axially and radially enlarged tooth **64** performs a function to be discussed hereinafter with respect to the reset mechanism. In that respect, a reset shaft **72** is of such diameter that it extends through a hole **73** formed within the center of the clutch plate and also through the bore of stem **60** and, in fact, projects through the hole **28** within the printed circuit board. The reset shaft **72** carries at one end a tapered, particularly configured plug **74** and at the opposite end a tapered, similarly configured receptacle or recess **76**, this end of the reset shaft projecting through a hole **78** associated with the thumb wheel and also through a hole **80** within the modular switch assembly housing **82**. The tapered plug **74** and the tapered receptacle **76** carried by the reset shaft are uniquely shaped so that it is not possible to couple the modular switch assemblies together except in a preferred manner to enable the reset motion to be transferred from switch to switch in a manner to be described hereinafter. Further, the reset shaft projection is tapered so that the individual shafts of the modular switch assemblies may be forced together to eliminate back lash and play between switch assemblies. There is little motion involved in the modular switch array of the present invention requiring a very tight assembly.

The reset shaft **72** is further provided with a hub or thrust collar **84** intermediate of its ends which acts in particular to disengage the clutch, that is, in any of the modular switch assemblies, axially shifting of the reset shaft in a direction towards the clutch spring **54**, compresses the clutch spring and forces the clutch plate spline **66** to disengage from the spline **68** of the thumb wheel **70** permitting rotation of the clutch plate **58** and its associated number wheel **34** carried thereby, irrespective of rotation of thumb wheel **70**. In this respect, the switch assembly housing **82** is rectangular in form, and is provided with rivet holes **86** at spaced locations within end wall **112**, which are aligned with the rivet hole **88** in the wheel cover **48** and holes **90** in the printed circuit board **26** so as to permit the fixedly locking of the housing **82** and the wheel cover **48** in position on the printed circuit board **26**. The housing **82** is further provided with relatively imperforate top and bottom and rear walls, but with a configured opening **92** within the concave front wall **94**. The left hand, smaller portion of opening **92** overlies the annular clear plastic projection **46** of wheel cover **48**, while the larger portion of the same opening permits the edge portion of the thumb wheel **70** to protrude therethrough. It is noted that the thumb wheel **70** is irregularly convoluted in its periphery to form spaced notches **96**, defining projections **98** therebetween with which the thumb of the operator makes contact to change the switch position. Further, a modified leaf spring **99** has one end **100** fixed to the rear wall of the housing **82** by means (not shown) and its free end is provided with a convex configuration as at **102**, the curvature of the same conforming to the notches or recesses **96** intermediate of the projections **98** on the periphery of the thumb wheel **70**. The detent spring provides a relatively large detent or holding force tending to maintain the thumb wheel in selected, rotated position.

One aspect of the present invention is directed to reducing the work load on the resetting mechanism, which commonly resets all of the switches in an axially extending array which may number in excess of the 21 illustrated in FIG. **1** for each of the players whose bowling score is being kept. Obviously, if the individual modular switch assemblies are to be used in arrays in excess of 21 or more, for other applications, the combined detent or retarding force acting on the thumb wheels adds considerably to the need for strength in the individual switches and the resetting mechanism for commonly resetting the same. In the arrangement of the present invention in multi-embodiment form, it is envisioned that the reset shaft must, of necessity, move 0.050 of an inch travel, and that such movement will accomplish disengagement of all clutches of the array such as that of FIG. **2**, pushing each reset shaft, its clutch plate and its number wheel back against the individual clutch springs **54** to the extent necessary to clear the splined teeth which are approximately 0.020 of an inch in height. Thus, while there is an over-travel inso-

far as each reset shaft is concerned, that is, 0.050 of an inch as against the necessary 0.020 of an inch, the overtravel insures that none of the splined teeth are in engagement during reset. Thus, in each case, the thumb wheel **70** remains fixed during resetting and the number wheel is rotated to reset position prior to reengagement of splines **66** and **68** associated with the clutch plate and the thumb wheel respectively.

In this respect, the thrust collar **84** carries a single radially enlarged reset spoke or tooth **104** which, in reset position, lies behind and against the enlarged reset tooth or stop **64** associated with the clutch plate **58** such that each individual modular switch assembly may be operated by rotation of the thumb wheel **70** from zero downward and from any position other than zero may be moved back. Thus, it may be rotated either clockwise or counterclockwise, with the exception that it cannot go backwards from zero because of the presence of the spoke **104** on the thrust collar **84,** which engages the large tooth or stop **64** as the clutch plate rotates, the reset shaft remaining essentially fixed unless actuated by the reset mechanism.

With the detent leaf spring **98** exerting a detent force in the amount of 8 to 10 ounces, it is readily seen that there is provided for 21 modular switch assemblies, a cumulative detent force which would require under normal circumstances a corresponding large force to effect reset in the absence of the clutch mechanism of the present invention.

Reference to FIGS. **6** and **7** in particular illustrates the axial shifting of the individual reset shaft **72,** the clutch plate **58** carried thereby against the bias of the clutch coil spring **54** and the disengagement between the spline **66** of clutch plate **58** and spline **68** of thumb wheel **70.** Axial shifting of the stem **60** occurs relative to the number wheel without the number wheel shifting due to the splined connection therebetween as at **62.** Resetting is achieved principally through the selected rotation and axial shifting of the reset shaft **72** which further operatively couples the individual modular switch assemblies together in a given array.

Reference to FIG. **4** illustrates more particularly the manner in which this is accomplished. In conjunction therewith, a common reset mechanism of essentially the same size as a single modular switch assembly is fixedly positioned with respect to the array of switches at one end of the array, in this case, at the right hand end as evidenced in FIG. **2.** The reset switch mechanism **24** is coupled to the array **16** of switches **18** by means (not shown) in which case, an L shaped frame member **110,** for instance, is fixed to end wall **112** of right most switch assembly **18** of the array. In that regard, base **111** of frame member **110** is provided with a boss **115** and a hole **114** through which projects a pinion **116** on an axial shaft **118** which terminates in a tapered plug **120** of a size and configuration so as to fit within the tapered receptacle **76** of the reset shaft **72** associated with the modular switch assembly **18** and projecting through the cylindrical hub **79** of the thumb wheel **70.** The frame **110** is further provided with a front plate **122** which is provided with an inverted L-shaped guide slot **124** including a relatively long leg portion **126** and a relatively short base portion **128.** The frame **110** is further provided with paired right angle projecting flanges **130** which are apertured at **132** and through which commonly projects a fixed mounting shaft **134.** The shaft **134** is held in place by grip rings **136** of conventional configuration. Slidably positioned on the shaft **134** is a reciprocable, and rotatable reset lever **138** formed of metal sheet stock and is provided with a cylindrical bent or barrel portion **140** defining a slide bearing for the lever and which concentrically receives the shaft **134** permitting the lever to slide up and down at right angles to the longitudinal axis of the assembly. Fixed to lever **138** inside of the barrel portion **140** is a fixed rack **142** which faces and is engageable with the pinion **116,** the rack being held to lever **138** by a pair of rivets **144.** A flange **146** which is bent at right angles to the lever proper overlies one end of a compression return spring **148** whose bottom end rests within cavity **149** (FIG. **11**). The upper end of spring **148** abuts flange **146** to maintain the projecting end **150** of the lever **138** at the top of the slot portion **126.** The projecting end **150** of the lever **138** carries a control knob **152** which is snap fitted thereto.

By reference to FIGS. **8 – 11,** the operation of the common resetting means mechanism may be visually appreciated. In FIG. **8,** the reset lever **138** is positioned in the illustrated mode at its uppermost and rightmost position within guide slot **124,** that is, to the extreme right hand end of the base portion **128** of the L-shaped slot **124.** In this case, lever **138** abuts the dome surface **117** of pinion **116,** and in which case, the rack **142** is slightly displaced therefrom as a result of the limited pivoting of the lever about the pivot axis as defined by the mounting shaft **134.** The rack remains meshed with the pinion **116,** however, to lock the shafts **72** from rotation. The return spring **148** maintains the lever **138** in its fully raised position, since the top of the spring acts on the flange **146.** The tapered plug **120** at the end of pinion shaft **118** is received within the tapered receptacle **76** of the adjacent reset shaft **72** of the modular switch assembly **18** and the biasing springs **54** associated with each of the modular switch assemblies **18** maintains the pinion **116** to its rightmost position and forces the operating lever **138** to pivot counterclockwise, FIG. **8,** such that the operating lever projection **150** is at the outboard end of the inverted L-shaped slot base portion **128.**

However, when a force such as that indicated by the arrow in FIG. **9** is applied to handle **152,** of the reset lever **138,** the pinion **116** moves to the left as does all of the connected reset shafts **72** of modular switch assemblies **18** in the array **16,** causing simultaneous declutching of the individual thumb wheels with respect to the number wheels for each switch assembly **18,** and at the same time, rack **142** is aligned and meshed with the pinion **116.** The lever extension or projection **150** is now in alignment with the leg portion **126** of slot **124** such that depression of handle **152** by a force applied at the top of the same will effect rotation of the pinion by engagement with the rack, as evidenced in FIG. **11,** to the extent of a full revolution of the pinion which is sufficient to completely reset all of the number wheels and therefore the switches of all of the switch assemblies **18** defining the array **16.** Upon completion of the resetting operation, the return spring **148** which has been compressed during resetting operation returns the reset lever **138** to the top of the slot portion **126.** This permits all the clutch springs **154** to shift by means of the reset shafts, the clutch plates into clutching engagement with their associated thumb wheels **70,** returning the pinion to the position shown in FIG. **8,** and forcing the operating lever **138** to pivot counterclockwise into

the position shown in the same figure. The switch assemblies are now ready for selective individual manual operation.

Turning next to the embodiment of FIGS. **12 – 15** inclusive, it is noted in FIG. **12,** that the longitudinal array of modular switch assemblies and the reset means at the right hand end of the assembly appears to be generally the same as those of the array illustrated in FIG. **2.** In that respect, like elements are given like primed numerical designations. The thumb wheel **70'** for each of the modular thumb wheel switch assemblies **18'** is in disc form with its circular periphery modified only to the extent of serrations **200,** rather than the undulated periphery of the thumb wheel in the prior embodiment. Further, the thumb wheel **70'** appears to be oversize in that its diameter is such that it partially protrudes through openings **202** within the top of the housing **82'** and opening **204** with bottom wall thereof. The principal purpose of this embodiment is to provide the individual modular switch assemblies **18'** with a thumb wheel, in which rotation of the number wheel **34'** is magnified, in terms of the rotation of thumb wheel **70'** which drives the same. Thus, by a geared action between the thumb wheel **70'** and the number wheel **34'** which carries the movable switch contacts, the number wheel **34'** may be rotated through multiple switch positions for each full finger or thumb movement of the thumb wheel **70'**. Further, while the first embodiment employs a configured detent leaf spring which fits within the notches on the convoluted periphery of the thumb wheel **70,** the individual switch assemblies **18'** of the alternate embodiment are characterized by the presence of a detent which engages a side wall of the thumb wheel for limited detenting at each possible numbered switch position.

In like manner to the first embodiment, the printed circuit board **26'** which overlies one end of the switch housing **82'** includes an extension portion permitting its fixed contacts to be electrically connected to a plurality of leads **27'** by way of a conventional edge connector **29'**, the details of which are not illustrated. Alternatively, each of the printed circuit boards **26'** may in fact act as daughter boards and be connected to a common mother board at essentially right angles to the plane of the same which may extend longitudinally across the rear of the switch array. Turning to FIGS. **13, 14** and **15,** in like respect to the prior embodiment, a reset shaft **72'** for each switch assembly **18'** is provided with a tapered plug **74'** at one end and a similarly configured tapered receptacle **76'** at the other end permitting end coupling of the modular switch assemblies **18'** for common operation by reset mechanism **24'** identical to the prior embodiment. Number wheel **34'** is coupled to the clutch plate stem **60'** through a spline connection **62'**. Reset shaft **72'** and its clutch plate **58'** can shift to the right or to the left but is biased to the right, FIG. **14,** by clutch coil spring **54'**. Further, the wheel cover **48'** is provided with an annular projection **46'** defining a cavity in which the rim **35'** of the number wheel rides. The number wheel **34'** is provided with a contact brush **42'** which makes contact with and rides upon the printed circuit board conductors (not shown) on the inside face of the printed circuit board **26'**. The wheel cover **48'** is further provided with an internal hub **52'** which defines a sleeve bearing for the stem **60'** of the clutch plate which is integral therewith and forms an axial extension of the same. Instead of the relatively small circular opening within end wall of the housing, as in the first embodiment, the end wall **112'** is provided with a relatively large circular opening **80'** which receives and acts as a bearing surface for hub **79'** of the thumb wheel **70'**.

Instead of employing opposed splined surfaces between the right hand face of clutch plate **58** and the opposed surface of the thumb wheel **70,** this embodiment makes use of a gear train in the form of intermeshed beveled gears carried by the clutch plate and the thumb wheel. In this respect, hub **79'** carries on its inboard edge, a first relatively large diameter annular bevel gear **206,** which is in mesh with a small diameter bevel gear **208** provided on the opposed face of the circular annular clutch plate **58'**. The diameter of the respective gears are such that an arcuate rotation of the thumb wheel **70'** by contact with the serrated periphery **200** results in an amplified rotation of the clutch plate **58'** and number wheel **34'**.

This rotation of the thumb wheel is under the restraint of a detent mechanism which makes contact with the side of the thumb wheel **70'** radially outwardly from the hub **79'**. The end face **210** of the thumb wheel **70** is provided with a convoluted annular surface portion **212** constituting alternate ridges and valleys, in which each valley corresponds to a numbered switch position for the modular switch assembly **18'**. In contact therewith, is a modified cylindrical detent member **214** which is rotatably carried at the end of an L-shaped leaf spring **216,** the periphery of the cylindrical member being longitudinally curved to more easily ride within a convoluted surface **212** of wheel **70'**. A second recess **218** is provided with an end wall **112'** of each switch assembly housing **82'**, the L-shaped leaf spring providing sufficient biasing force to maintain contact between the end face of the thumb wheel and the rotatable detent cylinder **214.** The base **220** of the leaf spring may be enlarged as at **222** on each side of the leg **224** and the rear wall of the housing is slotted as at **226** to receive the base for securely fastening the detent spring **216** in position.

In like manner to the prior embodiment, the reset shaft **72'** is provided with a thrust collar **84'** which bears against the clutch plate **58'** internally of bevel gear **208,** the thrust collar causing the clutch plate to shift to the left as evidenced in FIG. **16,** when force is applied axially as indicated by the arrow in response to operation of the reset mechanism **24'**. This releases the thumb wheel **70'** from its drive position with respect to the number wheel **34'**. Further, the thrust collar **84'** carries a reset spoke **104'** which extends radially outward therefrom and makes contact with an enlarged tooth or stop **64'** extending radially inwards of that portion of the clutch plate **58'** carrying bevel gear **208,** thus the thumb wheel **70'**, when engaged through the bevel gears with the clutch plate, can rotate the number wheel **34'** to the right or left of a zero or other reset position, but is prevented from rotation of the same in excess of a single revolution by the fact that the large tooth or radial stop **64'** is in the path of the relatively fixed reset spoke **104'**. Of course, during reset operation, all of the reset shafts rotate to the extent permitted by engagement between stop **64'** and the reset spoke **104'**.

In operation, it is assumed for instance, in FIG. **14,** that prior to movement of the reset lever of the reset mechanism **24,** the switch operation by rotation of

thumb wheel 70' has resulted in maximum rotation of the thumb wheel and the intermeshed clutch plate 58' to the extent where radially projecting stop 64', has contacted the reset spoke 104', or has moved to a position just behind the same as indicated in FIG. 14. Upon application of an axial force as evidenced by the arrow in FIG. 16, the reset shaft moves to the left, permitted to do so, by opening 28' in the printed circuit card 26'. This movement to the left, in the case of each switch assembly of the array, is to such an extent that the bevel gears 208 and 206 disengage but there is no change in relationship between stop 64' on the clutch plate 58' and the reset spoke 104 carried by reset shaft 72'. Once the axial shifting occurs against the bias of the clutch spring 54', at each switch assembly, the associated number wheel 34' is in a position for resetting by rotation to effect resetting of the switch to zero or reset position. In this respect, it is the depression of handle 152' of reset lever 138' against the bias of reset coil spring 148' that causes the rack 142' to engage its pinion (not shown), thereby rotating all of the axially joined reset shafts 72' of the individual switch assemblies 18' through an angular extent necessary to move each number wheel to reset or zero position. Rotation occurs for a given reset shaft 72' without rotation to the disengaged clutch plate 58' until contact occurs between the reset spoke 104' and the stop 64'. At that point, the reset wheel is driven, and up until that point, the reset shaft merely rotates within the stem 60' of the clutch plate 58'. Thereafter the reset spoke drives the clutch plate, and the splined number wheel 34' to the zero reset position. The full depression of the reset lever throughout the extent of the reset slot portion 124' is sufficient to insure zeroing or resetting of all number wheels and the switch contacts carried thereby. The lever is then returned to its upward and extreme right hand position as evidenced in FIG. 12. During upward movement of the reset lever 138', the rack 142' is still engaged with its pinion and the shafts 72' are axially displaced to the left, and rotate in the opposite direction causing an angular shift between the reset spoke 104' and the stop or tooth 64' of the clutch plate 58'. During this reverse rotation, the number wheel stays at its zero position and a reset shaft merely rotates within the clutch plate stem 60'. Again all the switches are in position for selective, individual input adjustment.

With more particular reference to FIGS. 16 – 22, another preferred embodiment of the present invention will be explained in greater detail, having the component parts which are similar to corresponding component parts in either of the previous embodiments being identified by the same number designations as appearing in the previous figures, but with the addition of primed designations. It is to be understood that the numbers with primed designations accordingly identify component parts already described in previous embodiments. The operation of the component parts identified by primed designations accordingly will operate in similar fashion to the operation of the components of previous embodiments.

Accordingly, with reference to FIGS. 16 – 21, the switch array therein includes a switch assembly 18' having a thumb wheel 70' therein. As shown in FIG. 19, the number wheel 34' is provided thereover with an elongated tape 304 having indicia 40' on the tape rather than on the periphery of the wheel 34'. Accordingly the number wheel 34' differs from the number wheel 34 of the previously described embodiment by the addition of the elongated tape 304. As shown in FIG. 21, the number wheel 34' is rotatably mounted in an annular recess formed by an annular projection 46' within a planar wheel cover 48', similar to the wheel cover 48 of the previous embodiment. The wheel 34' is rotatably mounted over a hub ring 303 which is concentric with the projection 46'. Yet with reference to FIG. 21, the wheel cover 48' is mounted in the housing 82' with an apertured portion 306 being provided in the sidewall of the projection 46'. The apertured portion 306 forms an edge 308 which abuts against a shoulder formed on a sidewall 309 of the housing 82'. Another edge 310, formed on a planar sidewall 311 which is integral with the portion 46', substantially abuts against another sidewall of the housing 82'. However, some clearance may be provided as shown in the figure. In the previous embodiment, the indicia provided on the number wheel 34 is viewed through the wheel cover 48. Instead of viewing the indicia 40' through the wheel cover 48' of the present embodiment, the tape 304 is disposed to project through the apertured portion 306 of the projection 46'. The tape 304 additionally is anchored to a pair of bosses 312 formed on the periphery of the number wheel 34', with the tape end projecting through the apertured portion 306 and disposed in the clearance between the planar sidewall 311 and another sidewall 309 of the housing 82'. The tape continues along the sidewall 309 and projects into a generally cylindrical housing 314 which has a central hollow hub 316. The tape is loosely reeled about the hub 316, permitting it to be unreeled or alternatively reeled upon the hub 316 without the need for rotating the hub. The tape is disposed in the clearance between two parallel plates 318, the outer one of which is transparent to form a window through which indicia on the tape can be viewed.

Yet with reference to FIG. 21, the indicia is serially transported into registration at the window by rotating the wheel 34' in clockwise fashion. Such rotation is accomplished upon clockwise rotation of the thumb wheel 70' which is coupled by its bevel gear 206' to the bevel gear 208' provided on the clutch plate 58'. The clutch plate 58' has a splined shaft 62' which connects to a correspondingly splined recess 38' on the number wheel 34'. Thus rotation of the thumb wheel causes a corresponding rotation of the indicia wheel, which causes the tape 304 to be reeled upon the periphery of the number wheel 34' and a corresponding transport of successive portions of the tape, with associated indicia on such successive portions, into registration at the window 318. As shown in FIG. 22, the cylindrical detent member 214', similar to the detent number 214 of the previous embodiment, engages in the convoluted surface 212' of the thumb wheel 70' in order to provide a detent for a corresponding numbered switch position, similar in operation to the previous embodiment.

As more particularly shown in FIG. 21, the wheel 34' has a projecting pin 320 thereon which is displaced curvilinearly in the clearance between the ring 303 and the hub 50'. A web 322 connects the ring 303 and hub 50' and provides a positive stop against which the pin 320 engages to prevent further rotation of the indicia wheel 34' either clockwise or counterclockwise. This prevents the tape 304 from being completely unreeled from the hub 316 and removed from the housing 314.

In addition, the thumb wheel has a projecting radial flange **324** having a pair of stops **326** and **328** which engage against corresponding stops **330** and **332** correspondingly provided on the sidewalls **334** and **336** in the housing, to prevent further rotation of the indicia wheel **34'** either clockwise or counterclockwise beyond desired stop points.

The housing **314** has a separate cover **338** which has a stem **340** projecting therefrom to fit in the hollow hub **316**, and thereby cover the tape which is received within the housing **314**. The reset mechanism includes the lever **138'** which is similar to the lever **138** of the previous embodiment, together with a handle **150'** riveted to the lever **138'** by rivets **302**. A rack **142'**, shown in FIG. **20**, is cemented to the lever **138** or attached thereto in any other suitable manner. The reset mechanism additionally has a projecting vertical flange **342** on the member **111'** which seats against and within a recess **344** provided in the lever **138'**. More particularly, when the lever handle **150'** is pivotally displaced to the left as shown by the arrows in FIG. **18**, the lever **138'** will engage against the dome head **117'** provided on the pinion **116'**. This causes the pinion to move to the left as shown in FIG. **18** against the bias of each spring **54'** of every switch assembly in the array of switches shown in FIG. **16**. To prevent over-travel of the lever handle **150'** to the left, the flange **342** will seat in and against the corresponding recess **344** provided in the lever **138'**. The lever handle **150'** may be then vertically displaced to reset each switch assembly in the array similar to the operation of the switch array of the previous embodiments. More particularly, the leftward motion of the pinion **142'** will cause a corresponding leftward displacement of the shafts **72'** of the switch arrays against the bias of the springs **54'** of the switch arrays. Such leftward movement thus will disengage the bevel gear **208'** from the bevel gear **206'**, such that when the lever **138** is vertically displaced the rack will be caused to drive the pinion **142'** and rotate each of the shafts **72'**. The reset spoke **104'** of each of the shafts **72'** will thus rotate to engage against a corresponding stop **64'** provided on each clutch plate **58'**. The clutch plates will be then caused to rotate with the shafts **72'**, and thereby cause a corresponding rotation of the number wheels **34'** connected thereto on corresponding spline shafts **62'**. This will cause the tapes to be forcibly stuffed into the housing **314'** of each switch assembly in loosely reeled relationship over the hollow hubs in the corresponding housings **314**. In this manner, the tapes of each switch assembly are thereby reset to zero, to allow for operation of the corresponding thumb wheels **70'** in order to unreel the tape and successively register indicia thereon for display at the transparent window **318**. In so doing, with reference to FIG. **21**, the pin **320** of the number wheel will engage against the web **322** to prevent excessive turning of the number wheel by the reset mechanism. Accordingly the pin **320** engages against the stop **322** when the number wheel is rotated either clockwise or counterclockwise to prevent excessive displacement of the tape **304** beyond certain selected limits of displacement. In addition, the number wheel **70'** may be rotated either clockwise or counterclockwise to select the correct indicia for display at the transparent window. The stops **326** and **328** provided on the thumb wheel **70'** prevents the thumb wheel from being rotated beyond selected limits and thereby also prevent excessive displacement of the tape **304** beyond its selected limits of displacement.

In the present embodiment, the reset mechanism does not include a return spring **148** as shown in the previously described embodiment. Instead, the lever **150'** must be positively returned by the operator to its position shown in FIG. **16** in order to permit engagement of the clutch wheel with the thumb wheel of the switch array. Thus, unless the switch is positively returned by the operator, the thumb wheels **70'** remain disconnected from the clutch wheels and disabled from advancing or otherwise positioning the indicia on the tape at the corresponding transparent window **318**.

While the invention has been particularly shown and described with reference to preferred embodiments thereof, it will be understood by those skilled in the art that various changes in form and details may be made therein without departing from the spirit or scope of the invention.

What is claimed is:

1. An improved, modular, resettable, thumb wheel switch assembly comprising, in combination:

a switch housing including fixed contact means,

a cylindrical number wheel positioned within said housing for rotation about its axis,

movable contact means carried by said wheel for selective movement into contact with said fixed contact means for indicating relative position of said number wheel,

a circular clutch plate coupled to said number wheel and rotatable therewith,

a reset shaft projecting through said clutch plate and rotatable relative thereto,

a thumb wheel mounted within said housing for rotation about its axis,

interfitting gear means carried by said thumb wheel and said clutch plate,

spring means for normally biasing said clutch plate into geared engagement with said thumb wheel for rotation therewith,

spring detent means contacting said thumb wheel and resisting rotation thereof, and

means carried by said reset shaft and acting on said clutch plate to disengage said gear means upon axial shifting of said reset shaft in a direction to compress said coil spring means and to thereby permit said number wheel to rotate irrespective of rotation of said thumb wheel.

2. The switch assembly as claimed in claim **1**, wherein said reset shaft includes a reset spoke extending outwardly therefrom and said clutch plate includes a reset stop extending into the rotary path of said reset spoke, and wherein said stop is circumferentially oriented relative to said number wheel so as to move said number wheel after axially shifting of said reset shaft, to a predetermined reset position.

3. The switch assembly as claimed in claim **2**, wherein said clutch plate includes a disc-like portion carrying a radial spline on one end face of the same, and said thumb wheel includes a second cooperating radial spline on the side of the same facing said clutch plate, and said means for coupling said clutch plate to said number wheel comprise spline means permitting axial shifting of said clutch plate with respect to said number wheel but preventing relative rotation therebetween.

4. The switch assembly as claimed in claim 3, wherein said stop means comprises an axially enlarged tooth on said clutch plate radial spline, and wherein said means carried by said reset shaft for acting on said clutch plate to disengage said gear means comprises a thrust collar contacting the side of said clutch plate remote from said number wheel, and said reset spoke comprises a radial projection on said thrust collar.

5. The switch assembly as claimed in claim 2, wherein said thumb wheel comprises a disclike member having a convoluted periphery, and said detent means contacting said thumb wheel comprises a leaf spring having a curved portion in contact with the convoluted periphery of said thumb wheel.

6. The switch assembly as claimed in claim 3, wherein said thumb wheel comprises a disc-like member having a convoluted periphery, and said detent means contacting said thumb wheel comprises a leaf spring having a curved portion in contact with the convoluted periphery of said thumb wheel.

7. The switch assembly as claimed in claim 4, wherein said thumb wheel comprises a disc-like member having a convoluted periphery, and said detent means contacting said thumb wheel comprises a leaf spring having a curved portion in contact with the convoluted periphery of said thumb wheel.

8. An improved, modular, resettable, thumb wheel switch assembly comprising, in combination:

a planar member,

fixed contact means carried by said planar member,

a wheel cover overlying said planar member and having planar edges lying flush therewith and having an annular projection to the side away from said planar member forming an annular wheel receiving cavity,

a cylindrical number wheel positioned within said annular cavity for rotation therein,

movable contact means carried by said number wheel for movement into contact with said fixed contact means carried by said planar member for indicating the relative position of said number wheel,

a concentric, cylindrical projection within said annular projection acting as a sleeve bearing, and defining a pocket therebetween,

a circular clutch plate including an axially projecting stem coaxially received within said sleeve bearing,

means coupling said number wheel to the projecting end of said stem for rotation therewith,

a reset shaft projecting through said clutch plate and being rotatably carried thereby,

a thumb wheel mounted for rotation about its axis,

interfitting gear means carried by said thumb wheel and said clutch plate,

a coil spring carried within said pocket and biasing said clutch plate axially into geared engagement with said thumb wheel for rotation therewith,

spring detent means contacting said thumb wheel for resisting rotation thereof, and

a thrust collar carried by said reset shaft and engaging said clutch plate on the side opposite said spring,

whereby axial shifting of said reset shaft compresses said coil spring and disengages said gear means to permit said number wheel to rotate irrespective of rotation of said thumb wheel.

9. A switch assembly as claimed in claim 8, wherein said reset shaft includes a reset spoke extending outwardly therefrom, and said clutch plate includes a stop positioned in the path of said reset spoke and being circumferentially oriented relative to said number wheel such as to move said number wheel, after axial shifting of said reset shift, to a predetermined reset position.

10. The switch assembly as claimed in claim 8, wherein said planar member comprises a printed circuit board including printed circuit conductors on the surface of the same facing said number wheel, said number wheel has a contact brush fixed thereto, on the surface facing said printed circuit board, to selectively engage the circuit conductors on said printed circuit board during rotation of said number wheel.

11. The switch assembly as claimed in claim 9, wherein said planar member comprises a printed circuit board including printed circuit conductors on the surface of the same facing said number wheel, said number wheel has a contact brush fixed thereto, on the surface facing said printed circuit board, to selectively engage the circuit conductors on said printed circuit board during rotation of said number wheel.

12. The switch assembly as claimed in claim 10, further comprising a generally rectangular housing having generally closed top, bottom and rear walls and a single closed end wall, a window formed within the front wall permitting viewing of said number wheel, means for fixing the open end of said housing to said printed circuit board, and wherein; said end wall and said printed circuit board carry openings, the respective ends of said reset shaft are aligned with said openings within said printed circuit board and said housing end wall and a portion of the peripheral edge of said thumb wheel projects through said front wall window, and wherein said spring detent means comprises a leaf spring fixed at one end to the wall of said housing, and has a free end in peripheral contact with said thumb wheel.

13. The switch assembly as claimed in claim 1, wherein said interfitting gear means comprises relatively small diameter bevel gear means carried by said clutch plate and relatively large diameter bevel gear means carried by said thumb wheel.

14. The switch assembly as claimed in claim 13, wherein said spring detent means contacting said thumb wheel for resisting rotation thereof, comprises an annular undulating detent surface carried by said thumb wheel at a position radially exterior to that of said bevel gear means and a relatively fixed, rotatable cylindrical member spring biased into contact therewith.

15. The switch assembly as claimed in claim 8, wherein said interfitting gear means comprises relatively small diameter bevel gear means carried by said clutch plate and relatively large diameter bevel gear means carried by said thumb wheel.

16. The switch assembly as claimed in claim 15, wherein said spring detent means contacting said thumb wheel for resisting rotation thereof, comprises an annular undulating detent surface carried by said thumb wheel at a position radially exterior to that of said bevel gear means and a relatively fixed, rotatable cylindrical member spring biased into contact therewith.

17. The switch assembly as claimed in claim 12, wherein said thumb wheel comprises a disc mounted for rotation within the end wall opposite that facing said number wheel and said interfitting gear means comprises relatively small diameter bevel gear means carried by said clutch plate and relatively large diameter bevel gear means carried by said thumb wheel.

18. The switch assembly as claimed in claim 17, wherein said spring detent means contacting said thumb wheel for resisting rotation thereof, comprises an annular undulating detent surface carried by said thumb wheel at a position radially exterior to that of said bevel gear means and a relatively fixed, rotatable cylindrical member spring biased into contact therewith.

19. The switch assembly as claimed in claim 18, wherein an L-shaped leaf spring is fixed to said housing and extends and terminates in radially overlapped position with respect to said annular undulating detent surface of said thumb wheel, and wherein said rotatable cylindrical member is carried at the free end of said leaf spring and biased into peripheral contact with said annular detent surface.

20. The thumb wheel switch assembly as claimed in claim 1, wherein said reset shaft includes male and female engaging surfaces at respective ends axially located relative to the ends of said housing whereby end-to-end stacking of a group of said modular thumb wheel switch assemblies automatically effects male and female engagement of the reset shafts of adjoining switch assemblies.

21. The thumb wheel switch assembly as claimed in claim 8, wherein said reset shaft includes male and female engaging surfaces at respective ends axially located relative to the ends of said housing whereby end-to-end stacking of a group of said modular thumb wheel switch assemblies automatically effects male and female engagement of the reset shafts of adjoining switch assemblies.

22. An improved, modular, resettable, thumb wheel switch mechanism comprising, in combination:

at least one switch assembly comprising:

a housing carrying fixed contact means,

a cylindrical number wheel positioned within said housing for rotation about its axis and carrying contact means selectively movable into contact with said fixed contact means during rotation thereof for indicating the relative position of said number wheel,

a thumb wheel mounted in said housing in spaced parallel relationship to said number wheel for rotation about its axis,

an axially shiftable reset shaft,

first driving gear means carried by said thumb wheel,

second driven gear means operatively associated with said number wheel,

means for biasing said first and second gear means into inter-engagement to effect rotation of said number wheel,

means carried by said reset shaft and responsive to axial shifting of the same to effect disengagement of said first and second gear means,

means responsive to rotation of said shaft in axial shifted position to reset said wheel, and

lever means rotatably and slidably carried by said housing and pivotable to a given position to engage and axially shift said reset shaft to effect disengagement of said gear means, and slidable after rotation to said given position, to effect rotation of said reset shaft.

23. The improved, modular, resettable, thumb wheel mechanism as claimed in claim 22, wherein said reset shaft has a pinion fixed thereto for rotation therewith and which extends axially beyond said housing, said housing further comprises frame means for supporting a pivot shaft at right angles to the axis of said reset shaft and to one side of said pinion, said lever includes a barrel portion surrounding said shaft, and being rotatable and axially slidable thereon, said shaft is positioned with respect to said pinion, such that a planar portion of said lever rides on the outer end of said pinion such that rotation of said lever to said given position axially shifts said pinion and said reset shaft carrying the same, said lever further comprises a rack fixed to the same and engaged with said pinion during rotation to said predetermined given position, said frame further comprises guide means for limiting pivoting movement of said lever to said given position and for subsequently sliding on said shaft, in the plane of the pivot shaft axis, with said rack engaged with said pinion and rotating said shaft to number wheel reset position.

24. The thumb wheel switch mechanism as claimed in claim 23, wherein said lever further comprises flange means extending parallel to the axis of said reset shaft and said pinion and to one side of the same, a reset lever compression return spring extends between said frame and said flange, and tends to maintain said lever at non-reset position at one end of said lever support shaft.

25. The switch mechanism as claimed in claim 24, wherein said guide means comprises an inverted L-shaped slot including a relatively long leg portion extending parallel to said rack and to said lever mounting shaft, and having a short base portion at right angles thereto and extending in a direction away from said pinion to permit said pinion and said reset shaft to shift axially within said housing under the bias of said means biasing said gears into inter-engagement.

26. The thumb wheel switch mechanism as claimed in claim 25, wherein said switch assemblies are at least two in number, and said mechanism further comprises means for fixedly coupling said housings in a longitudinally stacked array, and wherein said reset shafts include male and female engaging surfaces at respective ends axially located relative to the ends of said housing such that respective male and female engagement of reset shafts of adjoining switch assemblies occurs automatically during housing coupling.

* * * * *