(No Model.) 3 Sheets—Sheet 1.

P. J. & J. H. MARVEL.

TRUCK.

No. 590,436. Patented Sept. 21, 1897.

Fig. 1.

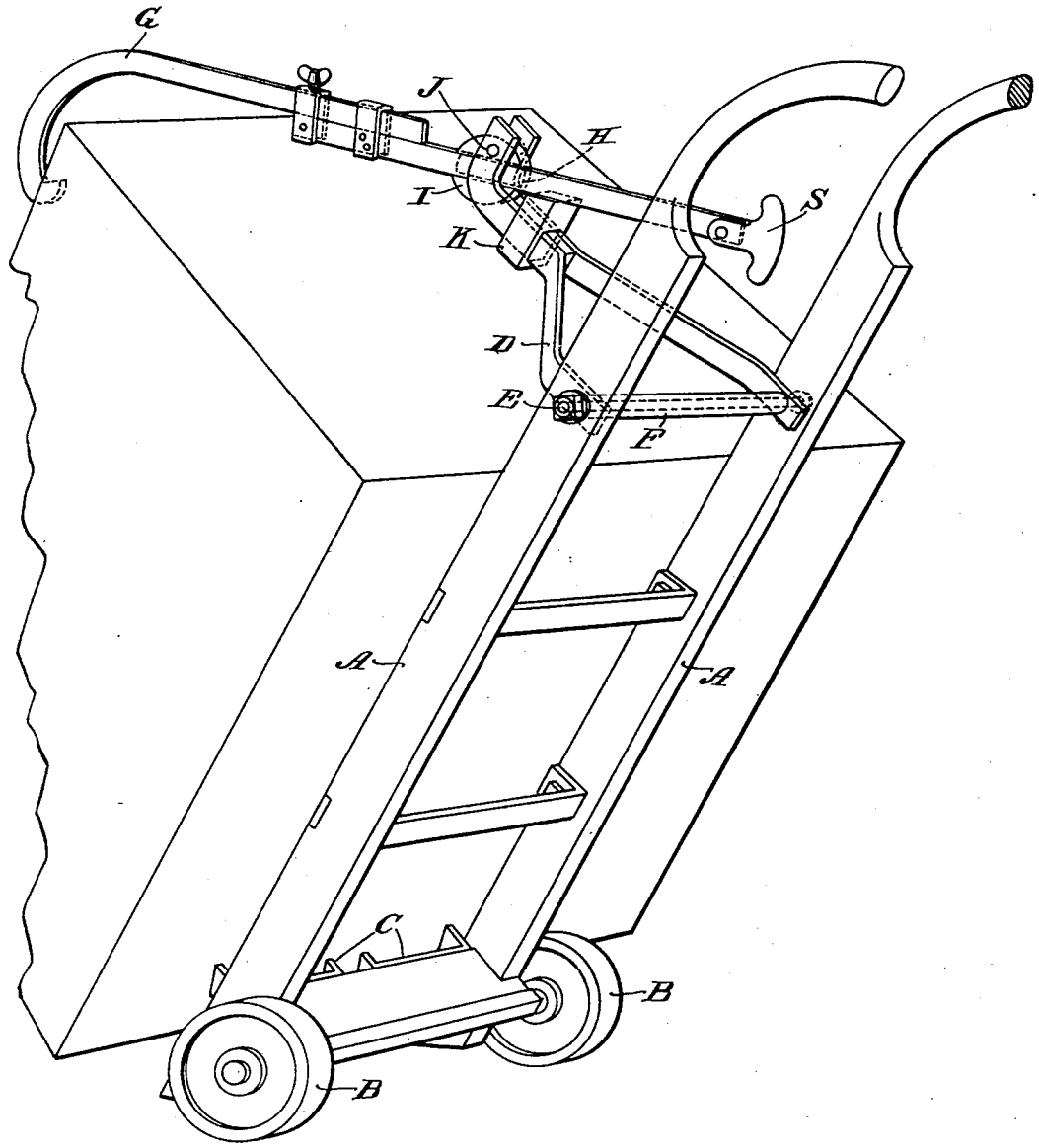

Witnesses:
W. A. Schaefer.
Geo. Warnemacher.

Inventors:
Philip J. Marvel.
Joseph H. Marvel.
by their attorney
Chas A. Rietter.

THE NORRIS PETERS CO., PHOTO-LITHO., WASHINGTON, D. C.

(No Model.) 3 Sheets—Sheet 2.

P. J. & J. H. MARVEL.

TRUCK.

No. 590,436. Patented Sept. 21, 1897.

Fig. 2

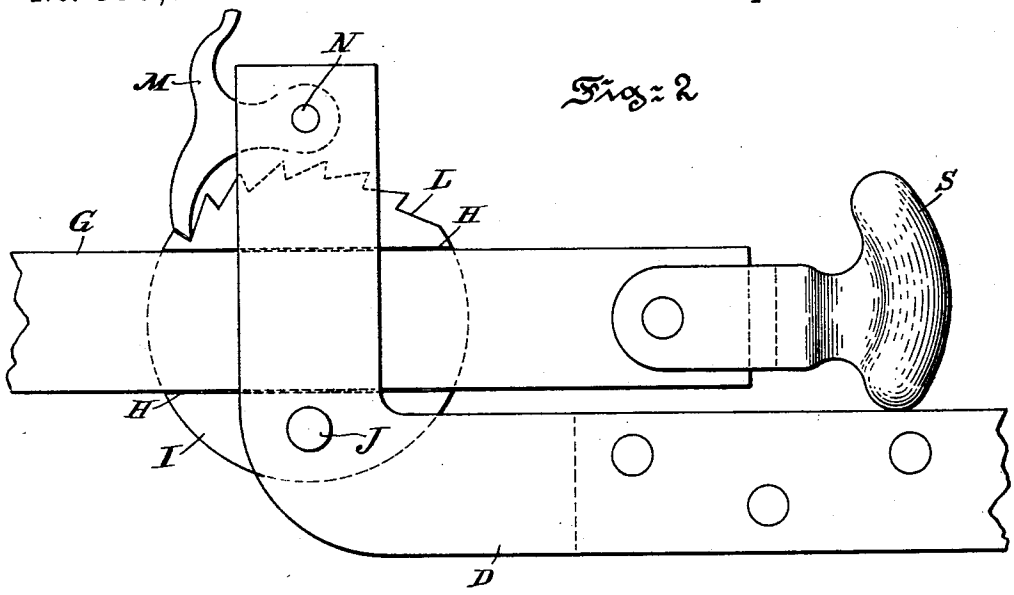

Fig. 3

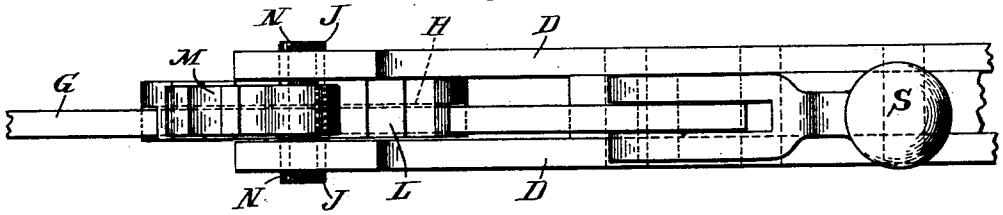

Fig. 4

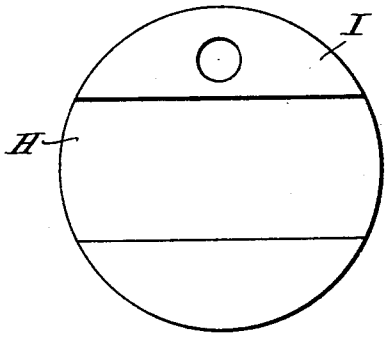

Fig. 5

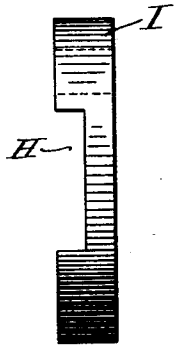

Witnesses:
W. A. Schaefer.
Geo. Warrenmacher.

Inventors:
Philip J. Marvel
Joseph H. Marvel
by their attorney
Chas A. Rutter

THE NORRIS PETERS CO., PHOTO-LITHO., WASHINGTON, D. C.

(No Model.) 3 Sheets—Sheet 3.

P. J. & J. H. MARVEL.

TRUCK.

No. 590,436. Patented Sept. 21, 1897.

Fig. 6

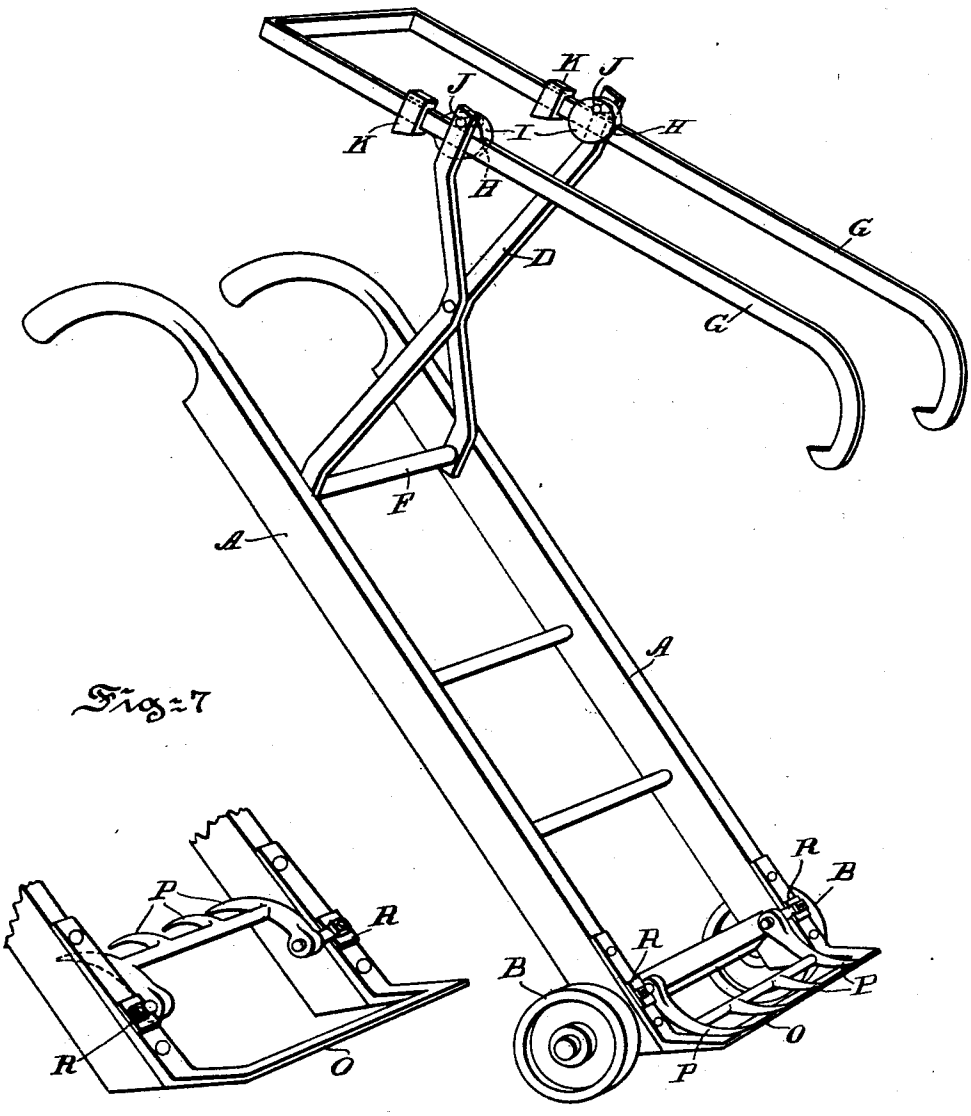

Fig. 7

Witnesses:
W. A. Schaefer.
Geo. Hannemacher.

Inventors:
Philip J. Marvel
Joseph H. Marvel
by their attorney
Chas A. Butler

THE NORRIS PETERS CO., PHOTO-LITHO., WASHINGTON, D. C.

UNITED STATES PATENT OFFICE.

PHILIP J. MARVEL AND JOSEPH H. MARVEL, OF ATLANTIC CITY, NEW JERSEY.

TRUCK.

SPECIFICATION forming part of Letters Patent No. 590,436, dated September 21, 1897.

Application filed March 9, 1896. Renewed April 3, 1897. Serial No. 630,629. (No model.)

To all whom it may concern:

Be it known that we, PHILIP J. MARVEL and JOSEPH H. MARVEL, citizens of the United States, and residents of Atlantic City, in the county of Atlantic and State of New Jersey, have invented certain new and useful Improvements in Trucks, of which the following is a specification.

Our invention relates to improvements in that class of trucks for handling and transporting packages—as barrels, boxes, and the like—which are furnished with hooks or grapples adapted to assist in loading the package upon the truck; and the object of our invention is to furnish an improved means for attaching the grapple to the upper end of a carrying arm or standard, the lower end of which is secured to the truck, in order to obtain a greater swinging movement of the grapple than has heretofore been possible.

In the accompanying drawings, forming part of this specification, and in which similar letters of reference indicate similar parts throughout the several views, Figure 1 is a perspective view of a truck furnished with our improvements; Fig. 2, a side elevation of the upper part of the swinging arm, showing the inside end of grapple-arm, disk which carries this arm, and pawl for engaging ratchet on said disk; Fig. 3, a plan of Fig. 2; Fig. 4, a side elevation of disk; Fig. 5, an end elevation of Fig. 4; Fig. 6, a perspective view of a truck furnished with two grapples and the forward end of which is furnished with hooks which may be thrown into or out of operative action at will; Fig. 7, a perspective view of the forward end of truck, showing the hooks thrown back out of operative position.

A are the side rails, and B wheels upon the forward end of truck.

O is a shoe upon the forward end of truck.

D is a rocking arm pivoted upon a rod or shaft E, which passes through the side rails A.

F is a tube surrounding shaft E, the ends of which bear against the inner sides of the rocking arm and prevent these sides from moving toward one another.

G is a hook or grapple which passes through a notch H, Figs. 4 and 5, in the side of a disk I, which is eccentrically pivoted at J to the free end of the rocking arm D. One side of the arm of the grapple lies against the inner side of one side of the swinging arm, the other against the disk.

In Figs. 1, 2, and 3 the swinging arm is shown composed of two members, the lower ends of which rest one against one side rail, the other against the other side rail, while their upper ends are just far enough apart to receive the disk I without binding upon it. The slot H in the disk is a trifle wider than the arm of the grapple, as best shown in Fig. 2, and this arm may be moved back and forth in this slot to permit the hook upon its end to engage smaller or larger packages.

When the point of the hook is in engagement with a package which is to be lifted upon the truck, it is necessary that either the disk I be locked and then the arm G be locked to this disk or that the arm G itself be locked.

In Fig. 1, K is a sliding dog carried upon the swinging arm D. When the grapple is engaged with the package to be lifted, the dog K is slid up until its upper end engages the under part of arm G, as shown. This firmly locks this arm, preventing any longitudinal movement of the same, and also prevents any rotation of the arm or disk about the pivot J, and when the handles are lowered the weight of the operator is transferred to the package through the grapple and the package is lifted upon the truck.

In Fig. 2 that part of the periphery of disk I opposite the pivot J is furnished with teeth L, with which a pawl M, pivoted at N to the swinging arm, is adapted to engage. When the grapple is engaged with the package to be lifted, the pawl M is engaged with one of the teeth L, and when the strain of lifting the package is thrown upon the grapple the disk is prevented by the teeth and pawl from rotating upon the pivot J, at the same time the arm G is locked, so that its upper end binds against the upper forward end of the notch in the disk, while its lower end binds against the lower rear end of this notch, the arm being thereby locked to the disk.

S is a handle secured to the rear end of the grapple-arm, by means of which this arm may be conveniently operated.

For very wide packages it is sometimes desirable to furnish the truck with two grapples.

Such an arrangement is shown in Fig. 6. In this case the upper ends of the swinging arms are far apart and each one carries an eccentrically-pivoted disk and grapple, the operation of which is substantially the same as that before described.

The advantage of the eccentrically-pivoted disk arrangement is that by its use we are enabled to get a greater swinging movement of the grapple-arm than is possible without it.

In Figs. 6 and 7 the forward end of the truck is furnished with the usual shoe O and in addition is furnished with hooks P, which may be moved either in or out of operative position, as desired.

The ordinary shoe O is used when trunks or other articles that might be injured by the hooks are to be lifted, but if a package that would not be injured by the hooks is to be lifted the use of the hooks is preferable, for there is with them apt to be less slip. The hooks are pivotally secured to the side rails A at R and may be swung down so as to rest against the shoe O, as shown in Fig. 6, or backward, as shown in Fig. 7, completely out of the way.

Having thus described our invention, we claim—

1. The combination with a truck, substantially as illustrated, of a swinging arm pivoted at its lower end, a disk eccentrically pivoted to the upper end of said arm, a grapple carried by said disk, and means for preventing said disk from turning upon its pivot, all substantially as and for the purposes set forth.

2. The combination with a truck, substantially as illustrated, of a swinging arm pivoted at its lower end, a disk eccentrically pivoted to the upper end of said arm, a slot in said disk, a grapple the arm of which passes through said slot, teeth upon the periphery of said disk, and a pawl pivoted to said arm adapted to engage said teeth, all substantially as and for the purposes set forth.

3. The combination with a truck substantially as illustrated of an arm or upright carried by said truck, a disk eccentrically pivoted to the upper end of said arm, a grapple carried by said disk, and means for preventing said disk from turning upon its pivot when the grapple is in use.

PHILIP J. MARVEL,
JOSEPH H. MARVEL.

Witnesses:
CARLTON GODFREY,
B. C. GODFREY.