W. A. MERRALLS.

REFRIGERATOR.

APPLICATION FILED JULY 29, 1907.

927,571.

Patented July 13, 1909.

3 SHEETS—SHEET 1.

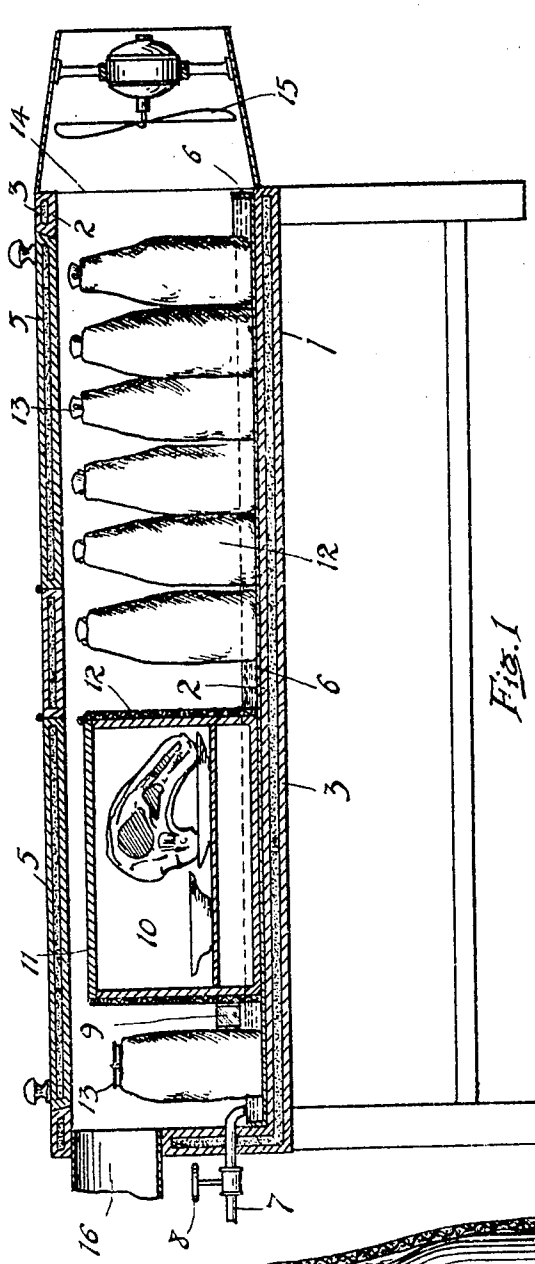

Fig. 1.

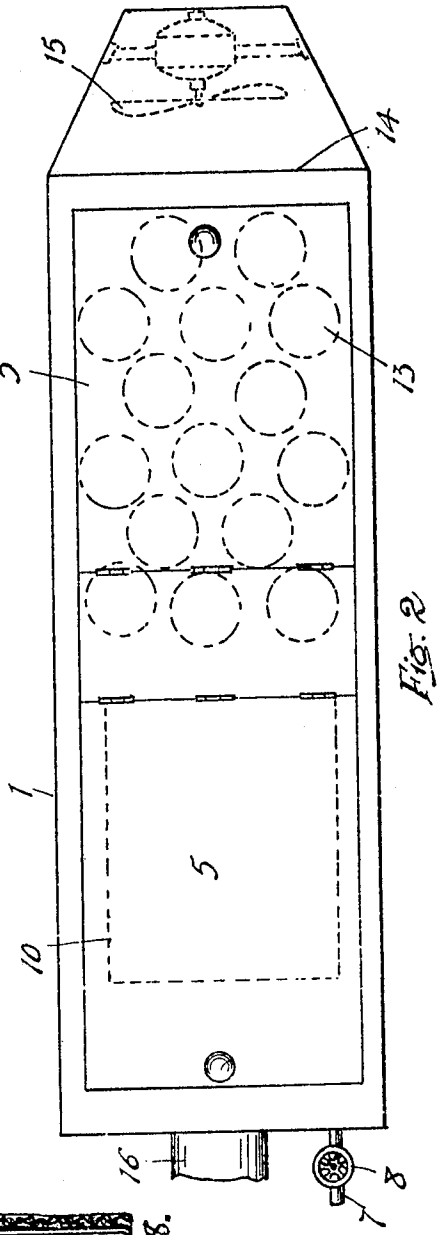

Fig. 2.

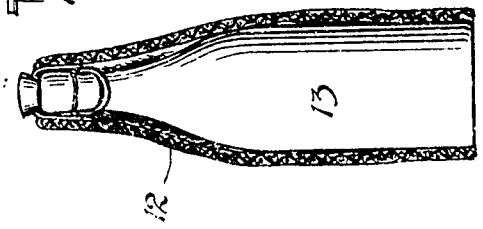

Fig. 3.

WITNESSES:

Geoffrey Holt.

N Keating.

INVENTOR,

W. a. merralls.

BY

F. m. Wright

ATTORNEY.

W. A. MERRALLS.

REFRIGERATOR.

APPLICATION FILED JULY 29, 1907.

927,571. Patented July 13, 1909.

3 SHEETS—SHEET 2.

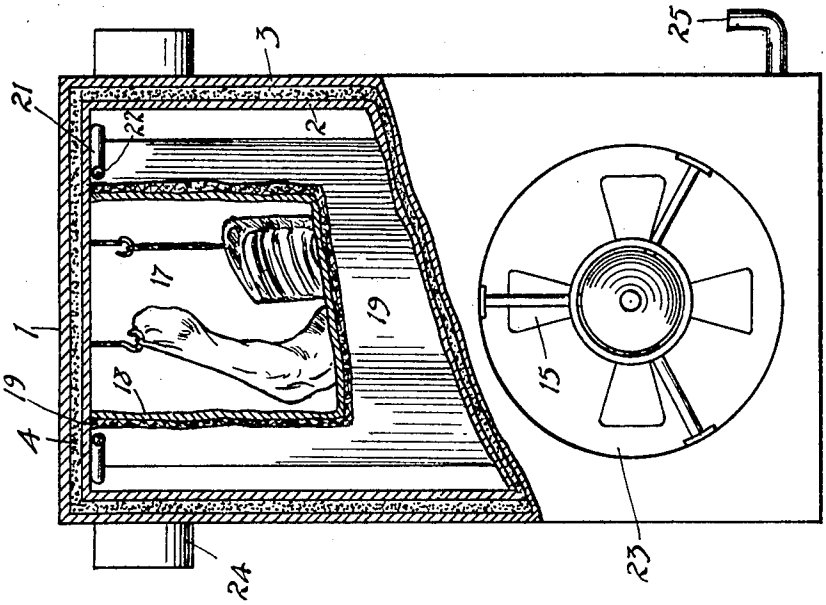

Fig. 4

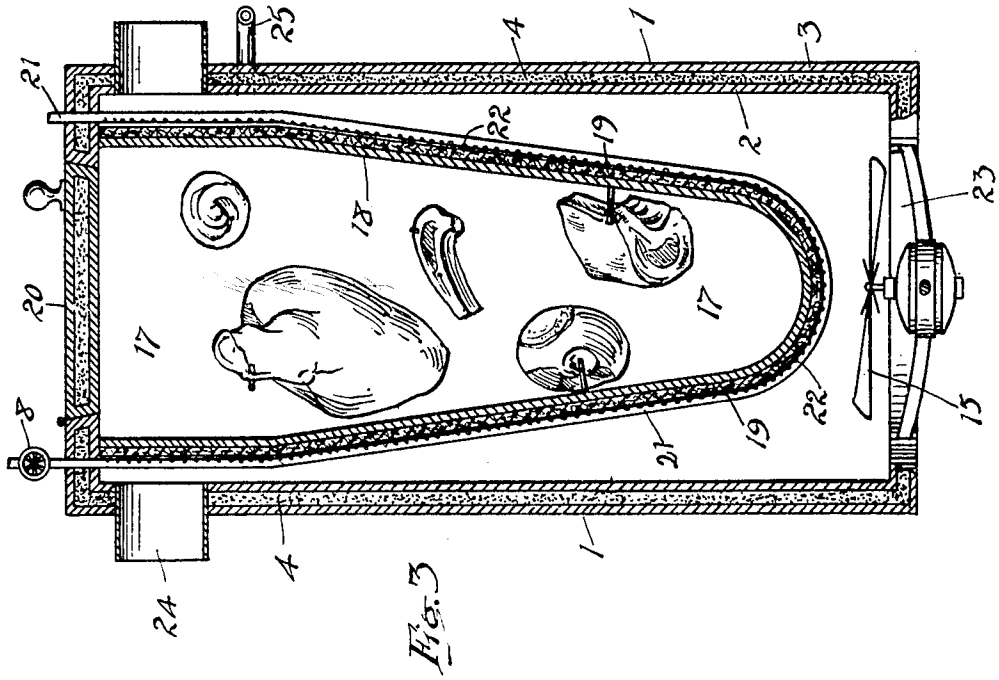

Fig. 3

WITNESSES:

Geoffrey Holt
N. Kesting.

INVENTOR,
W. A. Merralls,
BY
J. M. Wright,
ATTORNEY.

W. A. MERRALLS.

REFRIGERATOR.

APPLICATION FILED JULY 29, 1907.

927,571. Patented July 13, 1909.

3 SHEETS—SHEET 3.

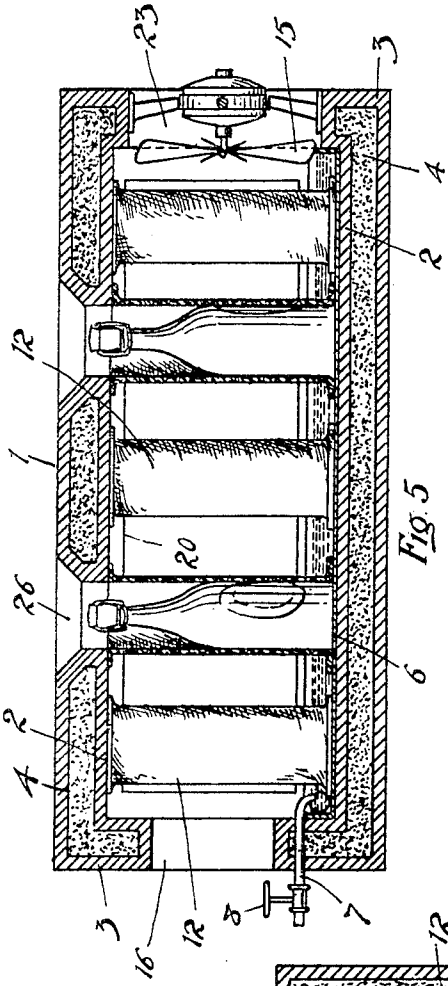

Fig. 5

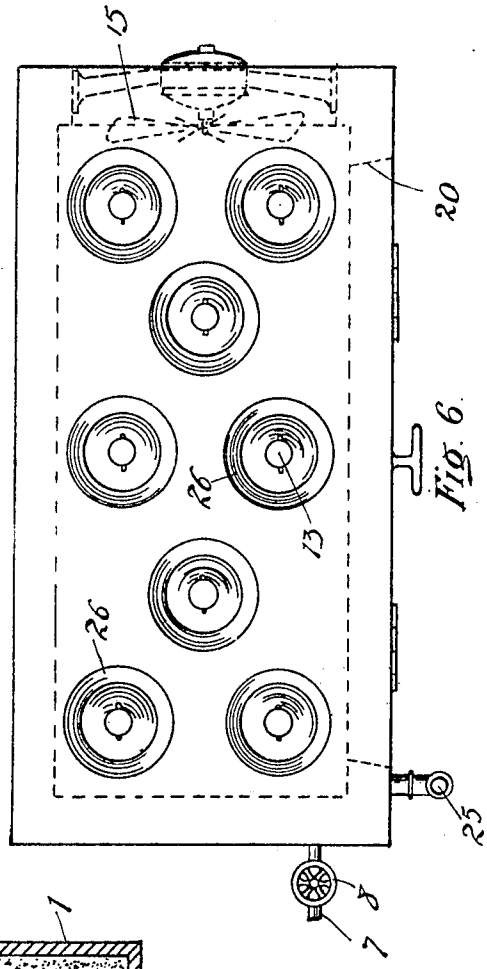

Fig. 6

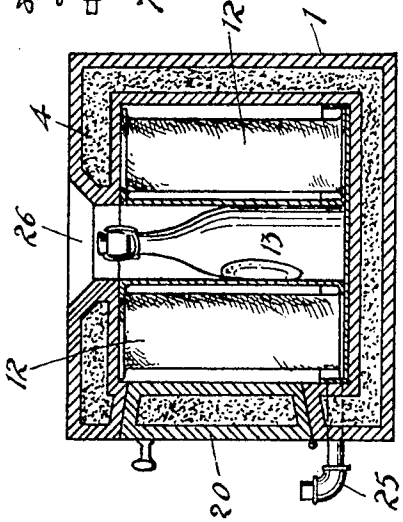

Fig. 7

WITNESSES:

Geoffrey Hott.

N. Keating

INVENTOR,

W. A. Merralls,

BY

F. M. Wright,

ATTORNEY.

UNITED STATES PATENT OFFICE.

WILLIAM A. MERRALLS, OF SAN FRANCISCO, CALIFORNIA.

REFRIGERATOR.

No. 927,571. Specification of Letters Patent. Patented July 13, 1909.

Application filed July 29, 1907. Serial No. 386,155.

To all whom it may concern:

Be it known that I, WILLIAM A. MERRALLS, a citizen of the United States, residing at San Francisco, in the county of San Francisco and State of California, have invented new and useful Improvements in Refrigerators, of which the following is a specification.

The object of the present invention is to provide an apparatus for cooling articles of food and beverages which will dispense with the use of ice.

In the accompanying drawing, Figure 1 is a longitudinal section of the apparatus; Fig. 2 is a plan view thereof; Fig. 3 is a horizontal section of a modified form of the device; Fig. 4 is an end view of the same, partly broken away; Fig. 5 is a longitudinal vertical section of a further modification of my invention; Fig. 6 is a plan view of the same; Fig. 7 is a cross section of the same; Fig. 8 is a detail view showing a bottle inside a porous jacket, the latter being in section.

Referring to the drawing, 1 indicates the casing of the refrigerator, which preferably consists of inner and outer shells 2, 3, and a filling 4 of sawdust or other insulating material. Said refrigerator is elongated in form, and access is had thereto from the top, by hinged covers 5, for the purpose of inserting or removing the articles of food or the vessels containing the beverages. In the bottom of the refrigerator is provided a tray 6 to contain water, which can be supplied by a pipe 7 controlled by a valve 8, and the presence of water therein may be observed through a small window 9 located in a side of the refrigerator. Instead of using a separate tray the bottom of the refrigerator itself may be so constructed as to hold water without leakage. In the tray 6 is placed a box 10 adapted to contain articles of food and having a removable top 11. The walls of said box are covered with a jacket 12 of absorbent or porous material, such as felt, woven fabric or the like, capable of drawing up water from the bottom of the tray by capillary attraction. The porous jacket is arranged to extend into contact with the water in the tray. Bottles or other vessels 13 containing beverages are also placed on said tray, preferably in a staggered arrangement, and said vessels are also inclosed with jackets of absorbent or porous material extending down into the water in the tray.

The refrigerator is open at its ends, and opposite to one open end 14 of the refrigerator is arranged a fan 15 driven from any source of power, an electric fan being here shown. By means of this fan air is forced through the refrigerator with considerable velocity, and out through the other open end 16 of the refrigerator.

The above form of the invention is preferably adapted for domestic use. Another form of the invention which is better adapted for the use of stores, hotels, or other places where it is desired to produce refrigeration on a large scale, is shown in Figs. 3 and 4. In this modification there is provided a receptacle 17 for the food or beverages, the walls 18 of which also are covered with a jacket 19 of absorbent material, and access is had to the interior of this receptacle through a door 20 at the end of the refrigerator. Extending around the walls 18 at the top is a pipe 21 provided with a controlling valve and having a number of minute perforations 22, adapted to discharge water upon the said absorbent jacket. The air is driven into the refrigerator by the fan 15 through an aperture 23 formed preferably in the lower portion of one end, and escapes through apertures 24 at the side near the other end. In this modification, a bent pipe 25, extending from the side of the refrigerator below the water line, furnishes a means of ascertaining the height of the water therein.

Figs. 5, 6, and 7 show a further modification of the invention, which is particularly well adapted for use in saloons and restaurants where it is desirable to be able to quickly remove the bottle from the refrigerator or replace it therein. In this form of invention, as in that first shown, the air passes in at one end and out through the other, but instead of providing doors or lids in the top of the refrigerator, said top is formed with flaring apertures 26 and secured at top and bottom to the refrigerator so as to register with said apertures are the jackets 12 of felt or porous material. These jackets are cylindrical in form and of such diameter that they fit closely around the bottles containing the liquid to be cooled. The apertures 26 are made flaring upward so as to permit the attendant to readily grasp the top of the bottle to remove the same, and quickly withdraw the bottle from the refrigerator. This form of the apparatus may

also be preferred in some cases for domestic use.

The cooling of the liquid or solid articles of food, is effected as follows. The jackets or porous material become saturated with water by the capillary attraction in the first form of the invention, or by permeation in the second form thereof. The air forced through the refrigerator by means of the fan produces a rapid evaporation of the water from the surface of these jackets, which has the effect of abstracting the heat from within the box or vessels inclosed by the jackets, this abstraction of heat continuing until said box or vessels are reduced to a very low temperature, substantially as low as could have been obtained by the use of ice.

It will be observed that in all forms of the apparatus means are provided for the continuous and regulated supply of water from an external source. Inasmuch as the quantity of heat rendered latent is measured by the evaporation of the water, it follows that the rate of supply of water will vary only with variations of temperature, and in a properly designed apparatus the water may be continuously supplied; and after an approximate adjustment of the rate of supply of water has been secured, the apparatus will require attention only at comparatively long intervals.

It is to be understood that the fan can be operated either by electricity or by water power, or by windmill, or by any suitable source of power, or, instead of the fan being placed adjacent to the end of the refrigerator, compressed air may be supplied thereto from a distant reservoir.

The advantages of this apparatus are obvious for localities where ice is difficult or expensive to procure, but even in cities where ice can be secured, this apparatus possesses many advantages over the ordinary refrigerator. The expense of operating the fan by electricity at prices at which it is commonly supplied compares very favorably with the cost of the necessary ice under the old method of refrigeration, and in convenience of use the present apparatus is much preferable, as it requires practically no attention, and enables the householder to be independent of the visits of the ice-man.

I claim:

1. A refrigerator chamber formed with an inlet and outlet for passage of air therethrough, said chamber having in its lower portion means for holding a body of liquid, a number of receptacles in such chamber spaced apart and arranged in staggered relation, porous jackets around said receptacles adapted to extend into such liquid, means for affording a regulated supply of liquid to the chamber and means for forcing a current of air through the chamber and into contact with said jacket.

2. A refrigerator chamber formed with an inlet and outlet for passage of air therethrough, said chamber having in its lower portion means for holding a body of liquid, a number of receptacles in such chamber, porous jackets forming open top pockets for said receptacles and adapted to extend into such liquid, means for affording a regulated supply of liquid to the chamber, and means for forcing a current of air through the chamber and into contact with said jackets.

In testimony whereof I have hereunto set my hand in the presence of two subscribing witnesses.

WILLIAM A. MERRALLS.

Witnesses:
FRANCIS M. WRIGHT,
D. B. RICHARDS.