G. W. ODELL.

ADJUSTING AND RECORD CARD AND THE LIKE.

APPLICATION FILED FEB. 19, 1916.

1,221,895. Patented Apr. 10, 1917.

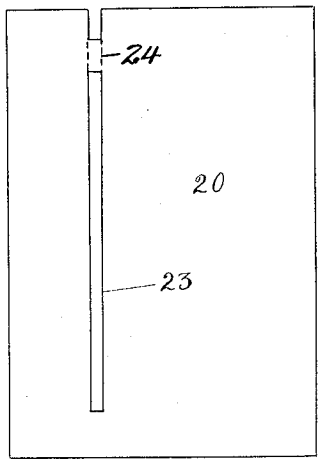

FIG. 1

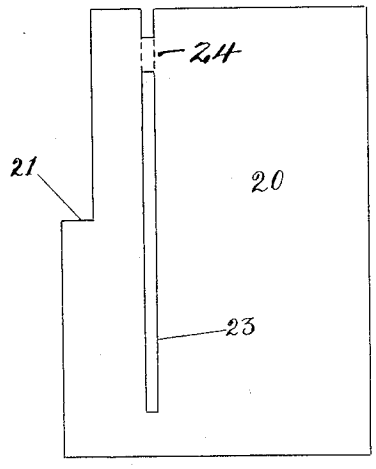

FIG. 2

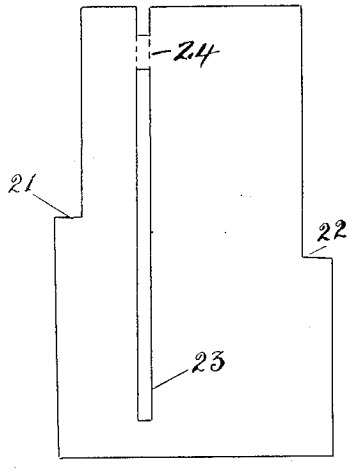

FIG. 3

Witnesses
W. H. Taylor
V. E. Albrechtsworth

Inventor
G. W. Odell
By E. J. Featherston Kenyon
Attorney

UNITED STATES PATENT OFFICE.

GEORGE WILLIAM ODELL, OF WESTMOUNT, QUEBEC, CANADA.

ADJUSTING AND RECORD CARD AND THE LIKE.

1,221,895. Specification of Letters Patent. Patented Apr. 10, 1917.

Original application filed August 26, 1914, Serial No. 858,591. Divided and this application filed February 19, 1916. Serial No. 79,451.

To all whom it may concern:

Be it known that I, GEORGE WILLIAM ODELL, a subject of the King of Great Britain, and resident of 202 Girouard avenue, Westmount, in the Province of Quebec, in the Dominion of Canada, have invented certain new and useful Improvements in Adjusting and Record Cards and the like; and I do hereby declare that the following is a full, clear, and exact description of the same.

The invention relates to an adjusting and record card or the like in time and quantity recording machine, as described in the present specification and illustrated in the accompanying drawings that form part of the same.

The invention consists essentially in the novel formation of a piece of sheet material, whereby a recording mechanism is adjusted for stamping purposes on the insertion of the piece.

The objects of the invention are to devise a new means of receiving the records of the work of a mechanic or other in shop or other place, or determine a measurement of distance or speed or in fact do many things mechanically in the way of calculation, which now have to be worked out by hand or by hand and chart, and generally to simplify the systems of calculating time or quantity or both.

In the drawings, Figure 1 is a plan view of a card showing said card ready for clipping.

Fig. 2 shows the card clipped on one side.

Fig. 3 shows the card clipped on both sides and finished as an instrument.

Referring to the drawings, the card 20 is here shown as having a longitudinal slot 23 joined near the outer end by the crossing piece 24. This slot may be at any place in the card and is so placed as to correspond with a certain rate per hour or other calculation stamped by other mechanism. The slot 23 is only one way of forming the card to control the escapement mechanism of a printing machine, and the card may be quite differently formed for this purpose without departing from the spirit of the invention.

The card is first clipped on one side which forms the shoulder 21 and at a later hour is clipped on the other side by a deeper cutting which forms the shoulder 22, thus the two shoulders are formed and it is the distance between these two shoulders that corresponds to the period of time elapsing between the hour of cutting the first clipping and the hour of cutting the second clipping.

The card thus cut is inserted in a printing machine to receive the record, and it is the distance between the shoulders longitudinally on the card that determines how far a printing roll may be rotated to determine the time for printing on said card the number of hours or minutes or both. The striking of one shoulder with a member of the printing mechanism permits another member of said printing mechanism to be drawn to the other shoulder, and it is in the latter operation that the printing mechanism is adjusted.

The situation of the slot, cutting, abrasion or obstruction as the case may be in the width of the card determines the rate per hour or other quantity, and as explained is that part of the formation of the card which insures the operation of an escapement mechanism in the printing machine.

The card may be any piece of sheet material adaptable for such a purpose, though a piece of plain cardboard is the preferred material. This card in operation can be more fully understood as to its usefulness by reference to an accompanying application Serial Number 79,450 and as to its making by reference to application Serial Number 858591.

What I claim is:—

1. In an adjusting and record card for adjusting a recording machine, a piece of sheet material having clippings made from opposite sides and of different lengths forming shoulders, one of said shoulders engaging in setting said recording machine and the other forming a stop in said setting operations, and an irregularity of the surface intermediate of its width.

2. A device of the class described, comprising a card having shoulders formed at different depths in its length by clippings, adapted to be cut at different times, said shoulders being on opposite sides and a further cutting in the card intermediate of its width, adapted to form a means of selecting in the use of the card.

3. An adjusting and record card for adjusting a recording machine clipped at each side from one end only forming a central body portion for insertion into said recording machine to receive the record, the shoulder at the end of one clipping acting as an engaging element and the other shoulder as a stop, said clipping of the card reducing said card in measurements to three distinct widths throughout its length.

Signed at Montreal, Quebec, Canada, this 31st day of December 1915.

GEORGE WILLIAM ODELL.

Witnesses:

M. A. GOULD,

W. W. TAYLOR.