July 2, 1935. V. W. SMITH 2,006,657

DETACHABLE LID HOLDING DEVICE

Filed June 4, 1934

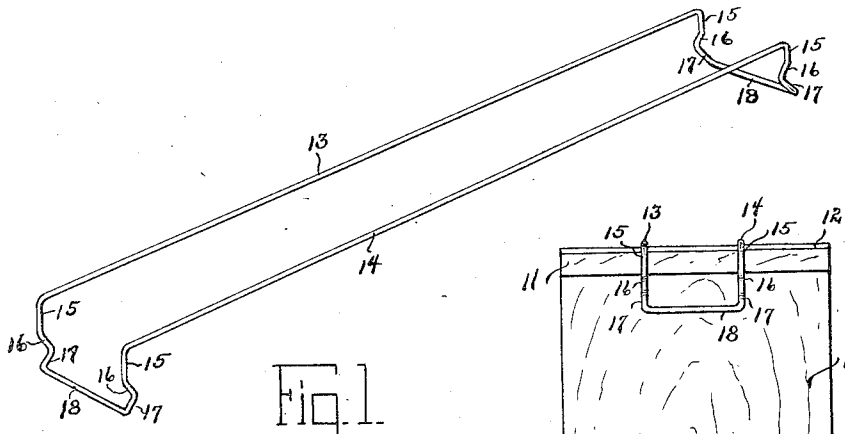

Fig. 1.

Fig. 2.

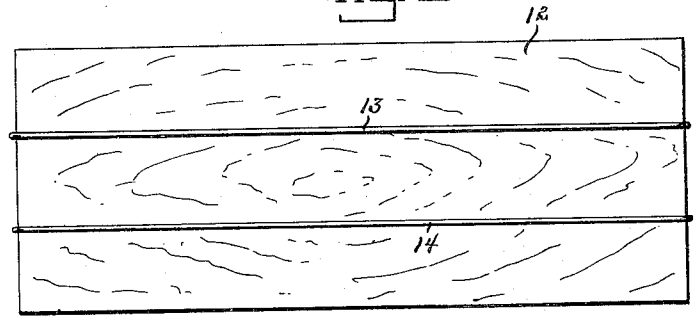

Fig. 3.

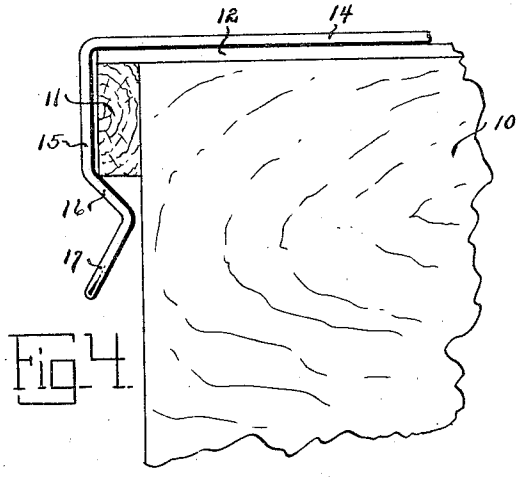

Fig. 4.

INVENTOR.
V. W. SMITH
BY
M. Talbert Dick
ATTORNEY.

Patented July 2, 1935 2,006,657

UNITED STATES PATENT OFFICE

2,006,657

DETACHABLE LID HOLDING DEVICE

Vogel W. Smith, Russell, Iowa

Application June 4, 1934, Serial No. 728,841

2 Claims. (Cl. 292—288)

The principal object of my invention is to provide a simple means for holding lid covers on containers, receptacles, crates, boxes, and like, that makes possible the quick removal or attachment of the lid.

A further object of this invention is to provide a detachable box or like lid holder that may easily and quickly be attached or removed for use on different boxes.

A still further object of my invention is to provide a device for holding lids on boxes etc. that does not mar nor damage either the lid or box.

A still further object of my invention is to provide a lid holding device for use in combination with boxes or like and lids therefor that not only securely holds the lid in proper position, but strengthens and braces the box and lid.

A still further object of my invention is to provide a lid holder for boxes or crates, that provides a supporting track on top of the box or crate for the support of other objects that may be placed on the box or crate.

A still further object of my invention is to provide a lid holder that is economical in manufacture and durable in use.

These and other objects will be apparent to those skilled in the art.

My invention consists in the construction, arrangement and combination of the various parts of the device, whereby the objects contemplated are attained as hereinafter more fully set forth, pointed out in my claims, and illustrated in the accompanying drawing, in which:

Fig. 1 is a perspective view of my holder ready for use.

Fig. 2 is an end view of a box or like with my lid holder installed thereon.

Fig. 3 is a top plan view of a box showing my lid holder in operative condition thereon.

Fig. 4 is an enlarged side view of a top corner portion of a box with my holder attached and more fully illustrates the construction of the box and lid holder.

Although my lid holding device may be used to advantage on various boxes, containers, and like, it is particularly adapted to egg boxes or crates which are universally uniform in dimensions. As is well known, these egg crates or boxes are used for the transporting of eggs and are usually returned to the owner after the final removal of the eggs. The lids are made of a thin wooden strip and the common practice is to nail them onto the box. The continuous nailing of these lids on the boxes and prying them off, soon splits and ruins them. These removals and replacements of the lids are more than that of mere sender and receiver, as the boxes must be opened for the inspection and candling of the eggs. Furthermore, the lids and boxes are not only damaged, but much time and energy is lost in removing and replacing the lids. I have overcome such objections, as will be hereinafter appreciated.

Referring to the drawing, I have used the numeral 10 to designate an ordinary box having the end cleats 11. The numeral 12 designates the box lid.

It is on such a container that I install my lid holding device and which I will now describe. My lid holder is formed from a single strand of spring wire by being bent into a construction substantially as shown in Fig. 1. The two ends of the wire strand may be secured together by any suitable means such as soldering, welding, or by twisting the two end portions of the strand together. The holder is so formed as to have two spaced apart parallel elongated rod portions 13 and 14. These rods 13 and 14 extend longitudinally over the top of the lid 12, as shown in Fig. 3 and are held together by the two loop end portions at each end respectively. Each of these loop end portions which are a continuation of the rods 13 and 14, extend first downwardly, then downwardly and inwardly, and then downwardly and outwardly to the end cross portion. In the drawing, I have used the numeral 15 to designate the portions that extend downwardly the numeral 16 to designate the portions that extend downwardly and inwardly, the numeral 17 to designate the portions that extend downwardly and outwardly, and the numeral 18 to designate the end cross portions.

To operate my device, it is merely necessary to place the lid 12 on top of the box 10 and force my lid holder downwardly over the upper portion of the lid and at the sides of the cleats 11, as shown in the drawing. The portions 16 will extend below the cleats 11 and yieldingly hold the device tightly on the lid and box, thereby preventing the accidental removal of the lid. This tightening and holding action is further encouraged by the lengths of the portions 15 being slightly less than the combined height of the cleat 11 and thickness of the lid 12, as shown in Fig. 4.

By such a construction it will readily be seen that the device will readily spring into an installed condition and that the rods 13 and 14 will be in a taut condition over the top and ends

of the lid 12. Besides connecting the two rods 13 and 14 together, the end cross portions 18 serve as handles for the removal or replacement of the device on a box having a lid. To remove the device from a box it is merely necessary to grasp one of the portions 18 and pull the same outwardly and upwardly from the box. By this arrangement the device may be easily and quickly operated from a position at either side of the box. By the portions 17 extending downwardly and outwardly, the portions 18 will be held a slight distance from the ends of the box where they may be easily grasped by the hand.

From the foregoing, it will readily be appreciated that my device may be operated almost instantaneously and is more effective in holding the lid on a box than four nails would be. The rod portions 13 and 14 strengthen the box and lid and serve as an excellent track for supporting other boxes placed on top of the box 10. When another box is piled on top of a box using my device, the upper box may be easily slid off of the lower box, as it rests almost entirely upon the longitudinally extending tracks or rods 13 and 14. As all eggs crates are of the same dimensions, my lid holding devices can be used over and over again on different boxes.

Some changes may be made in the construction and arrangement of my improved detachable lid holding device without departing from the real spirit and purpose of my invetion, and it is my intention to cover by my claims any modified forms of structure or use of mechanical equivalents which may be reasonably included within their scope.

I claim:

1. In combination with a rectangular container having an extension at each of its upper ends and a lid, a one-piece lid holding device comprising two spaced apart parallel rod members designed to extend over the top of said lid, and loop end portions connecting the ends of said two rod members together; each of said loop end portions designed to extend first downwardly at the side of each of said box extensions respectively and then downwardly and inwardly below said box extensions respectively; said portions of said loop end portions that extend first downwardly having lengths less than the combined length of one of the box extensions and the thickness of the said lid.

2. In a device of the class described, two spaced apart parallel rod members, two cross end members securing the ends of said rod members together respectively; the end portions of each of said rods being bent to extend first downwardly, then downwardly and inwardly, and then downwardly and outwardly to form with said cross end members a loop handle member at each end of the device.

VOGEL W. SMITH.