Nov. 7, 1961 J. K. JACKSON ET AL 3,007,473

TEMPERATURE CONTROL DEVICE FOR HYPO-THERMIA TREATMENT OF A PATIENT

Filed April 7, 1958 2 Sheets-Sheet 1

FIG. 1.

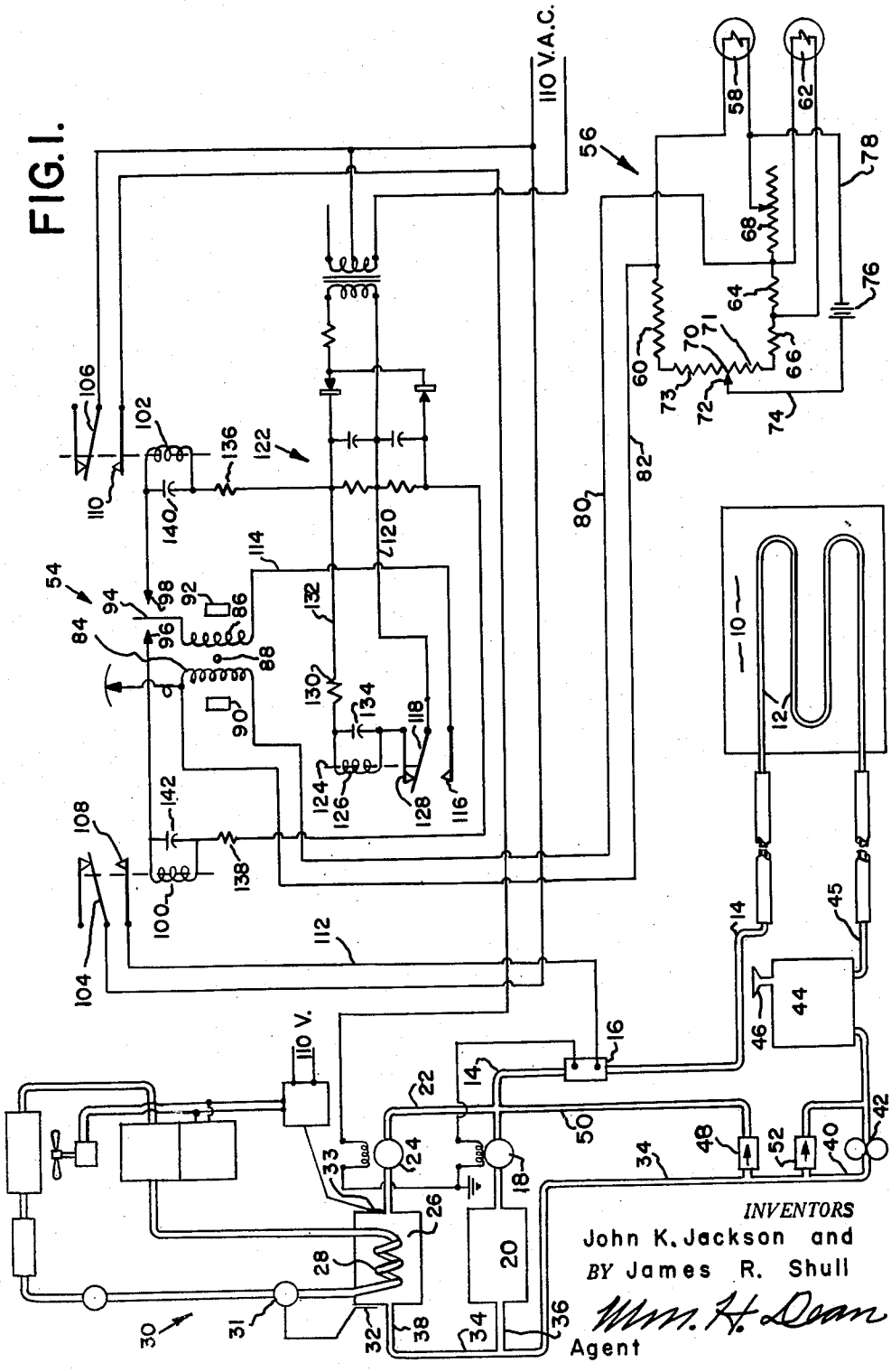

Nov. 7, 1961 J. K. JACKSON ET AL 3,007,473

TEMPERATURE CONTROL DEVICE FOR HYPO-THERMIA TREATMENT OF A PATIENT

Filed April 7, 1958 2 Sheets-Sheet 2

FIG.2.

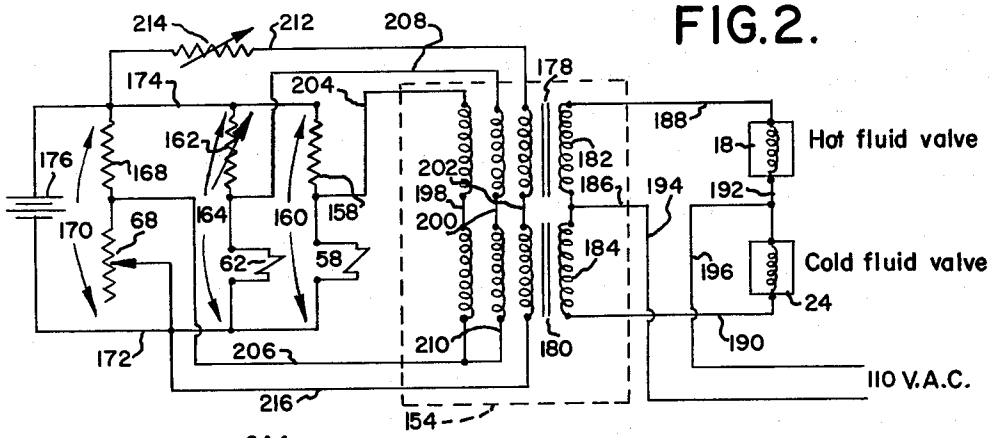

FIG.3.

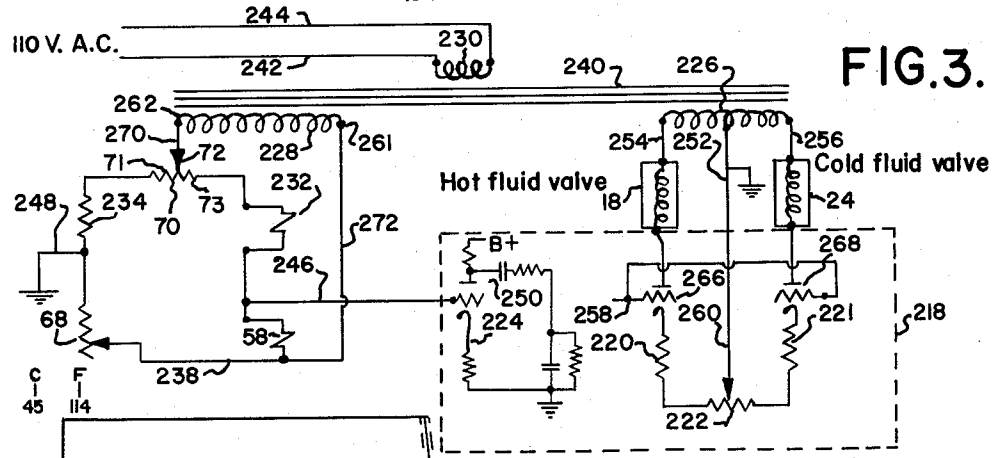

FIG.5.

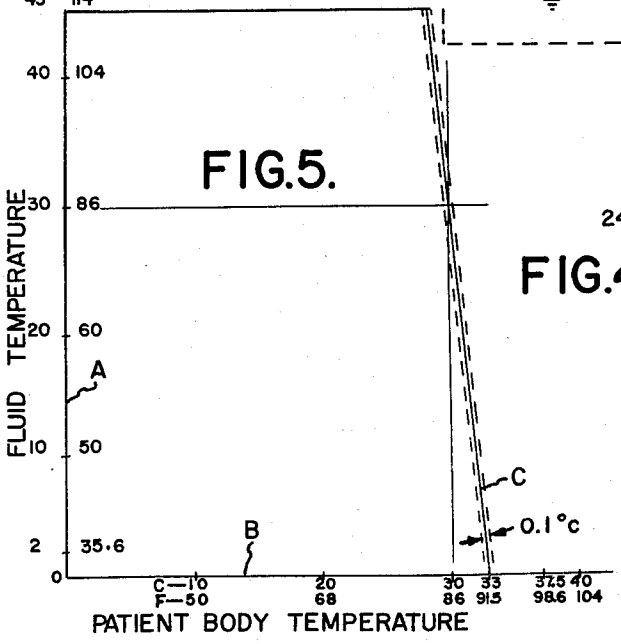

FIG.4.

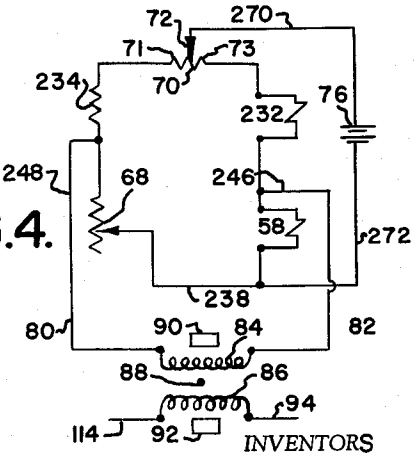

INVENTORS

John K. Jackson and

BY James R. Shull

Wm. H. Dean

Agent

United States Patent Office 3,007,473 Patented Nov. 7, 1961

3,007,473

TEMPERATURE CONTROL DEVICE FOR HYPO-THERMIA TREATMENT OF A PATIENT

John K. Jackson, 1840 E. Berridge Lane, Phoenix, Ariz., and James R. Shull, 6102 Calle Del Norte, Scottsdale, Ariz.

Filed Apr. 7, 1958, Ser. No. 726,705
12 Claims. (Cl. 128—400)

This invention relates to a temperature control device for hypo-thermia treatment of a patient and more particularly to a hypo-thermia patient control device for use in maintaining the body temperature of a patient below normal during surgical operations and other medical or therapeutic treatments.

It has been found that the general metabolism of a person's body is reduced fifty percent for each ten degrees Fahrenheit which the body temperature is reduced. This hypo-thermia method has been used during major surgery on various organs of the body including the heart, blood vessels and brain and permits a surgeon to operate for a longer period of time during which blood flow to the brain is interrupted than is possible with normal body temperatures. Under normal body temperature conditions the blood supply to the brain can not be stopped more than about three minutes without causing permanent damage to the brain or death of the patient. A reduction in the body temperature of a patient also tends to minimize bleeding at incisions in his body thereby facilitating an operation and reducing its duration.

Other uses of the hypo-thermia method may include the treatment of patients who have incurred localized toxins such as snake venom or perhaps other adverse conditions such as blood poisoning or brain injuries.

Various methods for inducing hypo-thermia of a patient have been known and one of the most common methods is to pack the patient in ice. In the operation of this method, a rectal thermometer or other body temperature measuring device may be utilized to indicate a reduction of the patient's body temperature. However, the age, sex, physiological condition, and general build of the patient are some of the factors which may vary and thereby cause difficulty in controlling a safe reduction of body temperature in the patient. For example, layers of fat under the skin of the patient may insulate him and thereby resist a reduction of body temperature. This causes the fat of the patient to become excessively cold before the general body temperature of the patient is reduced appreciably. When the temperature of a patient starts to reduce rapidly and nears the safe hypo level the extremely low temperature of the fat layer on the patient may tend further to reduce his body temperature below the safe hypo level after the patient is removed from the ice bath or pack. If the patient is cooled below the safe hypo level cardiac arrest or fibrillation of his heart muscle may result. Fibrillation is an erratic, spasmodic contraction of the heart muscle which may cause a cessation of pumping action.

While the prior art includes various devices and methods for reducing the body temperature of a patient, some of said devices and methods lack extremely precise automatic control of patient hypo-thermia whereby a maximum body temperature reduction can be attained with safety. Some of the previous hypo-thermia methods and devices have required excessive attention and have involved considerable guess work during surgical operations. In some instances, these methods and devices have failed to limit the reduction of the patient's body temperature thereby causing dangerous or harmful effects such as fibrillation of the heart muscle.

Accordingly, it is an object of the present invention to provide a temperature control device for hypo-thermia treatment of a patient which is fully automatic and which safely permits a maximum reduction of a patient's body temperature.

Another object of the invention is to provide a temperature control device for hypo-thermia treatment of a patient having a novel arrangement of temperature sensing elements one of which is placed to sense temperature of the patient's body while the other element is placed to sense temperature of the cooling medium; the body temperature sensing element having considerably greater control effect than the cooling medium temperature sensing element whereby the cooling rate of the patient is used to provide finite control of the cooling medium.

Another object of the invention is to provide a temperature control device for hypo-thermia treatment of a patient having a novel electrical bridge wherein a first electrical temperature sensing element is responsive to a patient's body temperature and a second temperature sensing element is responsive to a cooling medium adjacent the patient and wherein means is coupled to the second element thereby tending to minimize the response effect thereof with respect to that of the first temperature sensing element.

Another object of the invention is to provide a temperature control device for hypo-thermia treatment of a patient wherein separate voluminous sources of hot and cold fluid are controlled by electro magnetic shut off valves coupled to an electrical temperature sensing bridge whereby a very rapid change in temperature of a temperature control fluid may be attained in order to rapidly induce heating or cooling in a blanket adjacent to the patient so that maximum thermal capacity of the patient may be overcome when his temperature tends to reach an undesirable value.

Another object of the invention is to provide a temperature control device for hypo-thermia treatment of a patient having a novel arrangement of temperature sensing elements one of which is placed to sense temperature of the patient's body while the other element is placed to sense temperature of the cooling medium; the body temperature sensing element having considerably greater control effect than the cooling medium temperature sensing element whereby a high gain in control of the cooling medium temperature may be attained with respect to a change in the patient's body temperature.

Other objects and advantages of the invention may be apparent from the following specification, appended claims, and accompanying drawings forming a part of this application in which:

FIG. 1 of the drawings is a diagrammatic illustration of a temperature control device for hypo-thermia treatment of a patient in accordance with the present invention;

FIG. 2 of the drawings discloses a modification of the control portion of a temperature control device for hypo-thermia treatment of a patient in accordance with the present invention;

FIG. 3 discloses another similar modification of the present invention;

FIG. 4 discloses a further modification of the present invention and;

FIG. 5 is a graphic illustration of the operating characteristics of the temperature control device for hypo-thermia treatment of a patient in accordance with the present invention.

The temperature control device, for hypo-thermia treatment of a patient, of the present invention has been used automatically to control the temperature of patients when undergoing surgical operations and the body

temperature of such patients has been maintained precisely at a desired level whereby a maximum reduction of body temperature has been attained with safety.

The device utilizes a blanket **10** which comprises conventional construction features. This blanket includes tubular conduits **12** adapted to contain fluid which may either exchange heat to or from a patient. Thus, the blanket **10** and conduit **12** function as a heat exchanger relative to the thermal properties of the patient. This blanket may be draped over the patient preliminary to and during surgical operations as desired. It will be obvious to those skilled in the art that other forms of heat exchangers may be used as equivalents to the blanket **10** as, for example, a rectal heat exchanger may be employed for use in controlling the hypo temperature of a patient.

The conduit **12** is provided with an inlet conduit **14** which communicates through a thermostatic switch **16** with a solenoid valve **18** which controls the outlet of heated fluid from a thermostatically controlled fluid heating tank **20**. The conduit **14** also communicates via a tube **22** with a solenoid valve **24** which controls the flow of cold fluid from a tank **26** which contains an evaporative coil **28** of a conventional refrigeration system **30**.

This refrigeration system is provided with a thermostat **32** which together with the expansion valve **31** maintains the proper refrigerant operating conditions. Another thermostat **33** senses temperature of the fluid in tank **26** in order to control the A.C. power supplied to the refrigeration system **30** and thereby maintain the temperature level of fluid in the tank at a desired level.

A conduit **34** communicates with the inlet of conduits **36** and **38** of the tanks **20** and **26**, respectively. This conduit **34** communicates with the outlet **40** of a fluid circulating pump **42** which communicates with a reservoir **44**.

This reservoir **44** receives fluid from a conduit **45** communicating with the conduit **12** whereby operation of the pump **42** exhausts fluid from the conduit **12** and forces fluid around through the system and into the conduit **12** via the tube **14**.

The tank **44** has a filler opening **46** which is utilized to charge the fluid system of the invention. A check valve **48** communicates with the tube **34** and permits fluid to flow into a conduit **50** which communicates with the conduit **14** down stream of the solenoid valves **18** and **24**. When these valves are closed fluid may pass from the outlet **40** of the pump **42** through the check valve **48** and into the conduit **14** whereby fluid is circulated through the conduit **12** in the blanket **10** during an interval when both solenoid valves **18** and **24** are closed as will be hereinafter described in detail.

A safety check valve **52** permits flow from the outlet of the pump **42** to the inlet thereof in case any of the conduits of the system become plugged thus preventing rupturing of the conduits of the system under such conditions. It will be understood that the check valve **52** is heavily loaded against fluid flow therethrough so that fluid normally tends to flow through the check valve **48** or the solenoid valves **18** or **24**. It will be obvious to those skilled in the art that loading of the spring in the check valve **52** must be greater than that in the check valve **48**.

The solenoid valves **18** and **24** are coupled to a relay circuit **54** which receives electrical signals from a bridge circuit **56** forming the primary control device of the present invention. The electrical bridge **56** is of the balanced Wheatstone type. A thermistor **58** forms one element of this bridge and it is a temperature sensing element which may be applied to a patient's body; as, for example, in the form of a rectal probe. This thermistor **58** is coupled to a fixed resistor **60** to form substantially one hundred eighty degrees of the bridge **56**.

A thermistor **62** forms an element of the bridge **56** and during operation of the present invention this thermistor **62** is placed contiguous to the blanket **10** in order to sense temperature of the fluid passing through the conduit **12**. A resistor **64** is coupled to the thermistor **62** in a shunt relationship therewith and in series with another fixed resistor **66**.

The resistors **64** and **66** are coupled with the thermistor **62** in a manner to reduce its effect upon the bridge as it responds to varying temperatures. It will therefore be apparent that the response of the thermistor **58** will have a greater effect upon electrical activity in the bridge than will the response effect of the thermistor **62**.

A variable resistor **68** is coupled in series with the resistor **64** and the thermistor **58** thereby providing means for adjusting the bridge to predetermine a temperature at which the thermistors **58** and **60** will respond to balance the bridge.

Another resistor **70** of the bridge is utilized for calibration purposes and is engaged by a follower **72** coupled to conductor **74** connected to one terminal of the battery **76** which provides a D.C. power supply for the bridge. Connected to the opposite terminal of the battery **76** is a conductor **78** which is coupled to the bridge between the thermistor **58** and the variable resistor **68**.

It will be seen that the thermistor **62** together with the resistors **64**, **66** and **68** and a portion **71** of the calibration resistor **70** forms a section including one hundred eighty degrees of the bridge **56** while the thermistor **58**, resistor **60** and a portion **73** of the calibration resistor **70** form an opposed one hundred eighty degree section of the bridge **56**.

Conductors **80** and **82** are coupled to the central portions of the opposed one hundred eighty degree sections of the bridge in order to measure the unbalance thereof so that an appropriate signal may be conducted to a coil **84** of the relay **54**.

It is known that thermistors are generally more sensitive to temperature changes than are ordinary resistance elements. It is also known that they respond oppositely as compared to a conventional temperature sensing resistance element. The resistance of these thermistors increases with a decrease in temperature. It will be apparent to those skilled in the art that if conventional resistance temperature responsive elements are substituted for one or both of the thermistors that such resistance elements would have an opposite position in the bridge **56** relative to that occupied by the present thermistors. This is necessary in order to obtain a proper direction of polarity relative to the relay **54** as will be hereinafter described.

The circuitry of the bridge **56** is so arranged that the resistors **64** and **66** tend to decrease the response effect of the thermistor **62** to a degree substantially equalling one tenth of the response effect imposed by the thermistor **58**. It will be understood, however, that this ten to one ratio is only an example of a relationship which will create a high gain in control functions and therefore there may be conditions of control which might be met by providing another response ratio such as twenty to one between these thermistors.

In the relay circuit **54**, the coil **84** is mechanically supported adjacent to a coil **86** and these coils are mounted pivotally on a pin **88**. The pin **88** is disposed between opposite poles **90** and **92** of a magnet whereby energization of the coil **84** causes the coils **84** and **86** to pivot about the axis of the pin **88**. The coil **84** responds to polar unbalance of the bridge **56** thus permitting the coil **84** to pivot either clockwise or counterclockwise about the axis of the pin **88** so that a contact arm **94** coupled to the coil **86** may alternately engage contact **96** or **98** which are respectively coupled to load relay coils **100** and **102**.

These holding coils **100** and **102** actuate switches **104** and **106**, respectively, which have contacts **108** and **110** coupled with the solenoid valves **18** and **24**, respectively.

The thermostatic switch **16** is disposed to interrupt the flow of current through a conductor **112** from the contact

108 to the solenoid valve 18 when the temperature of fluid in the conduit 14 reaches an undesirable high limit which might be established to prevent burning the patient.

Coupled to the opposite end of the coil 86 from the contact arm 94 is a conductor 114 which is connected to a contact 116 which is engageable by a movable contact arm 118 which is electrically connected by means of a conductor 120 to a D.C. power supply circuit 122.

Coupled to the movable arm 118 is an armature 124 of a solenoid 126 and this armature is spring loaded in a direction to cause the pivoted arm 118 to engage a contact 128 which is coupled to one end of the solenoid winding. The opposite end of the solenoid winding is connected through a resistor 130 to a conductor 132 coupled to the D.C. power supply circuit 122. It will be seen that this circuit rectifies alternating current to D.C. current and that the conductor 132 receives a positive voltage relative to the conductor 120.

Resistor 130 in conjunction with condenser 134 together determine the rate of voltage build up across solenoid coil 126 while the resistance of solenoid coil 126 in conjunction with the condenser 134 together determine the rate of voltage decay across the terminals of relay coil 126. This resistor 130, relay coil 126 and condenser 134 control the cycle frequency of the movable arm 118 as it is alternately moved to the contact 116 by build up of voltage across the solenoid and to the contact 128 by decay of voltage across relay coil 126 and by power of a spring not shown.

The load relay coils 100 and 102 are equipped with resistors 136 and 138 which are similar to the resistor 130 hereinbefore described. These holding coil circuits are also provided with condensers 140 and 142 which are similar to the condenser 134 hereinbefore described. It will be understood, however, the capacities of the condensers 140 and 142 differ from that of the condenser 134 whereby the charge rate of the holding coils 100 and 102 provides for a longer time constant thereof than that of the coil 126. This permits the switch arm 118 alternately to energize and de-energize the coil 86 without permitting de-energization of either of the coils 100 or 102 which ever happens to be electrically coupled to the contact arm 94.

The voltage output from the bridge circuit 56 when it is unbalanced is sufficient to pivot the contact arm 94 into engagement with one of the contacts 96 or 98. The contact arm 94 is normally held in a null position by resilient means not shown, and when the voltage is conducted from the bridge 56 to the coil 84 the contact arm is forced to overcome the null balance force and into engagement with one of the contacts 96 or 98 whereupon the coil 86 may alternately be energized by action of the movable contact arm 118 in connection with the conductor 114 thereby providing a powerful force tending to hold the contacts closed. When the bridge 56 becomes balanced and a voltage is not conducted to the coil 84 there is no force tending to hold the contact arm 94 engaged with one of the contacts 96 or 98 except electromagnetic force generated by current passing through the coil 86. When this current flow is interrupted by movement of the contact arm 118 away from the contact 116 the coil 86 is de-energized and resilient loading of the contact arm 94 forces it to a null position thereby de-energizing one of the coils 100 or 102 depending upon disengagement of the arm 94 from either of the contacts 96 or 98, respectively.

Operation of the temperature control device for hypothermia treatment of a patient is substantially as follows:

A patient may be covered by the blanket 10 to hold the conduit 12 contiguous with the patient in order to provide a good heat exchange relationship between the patient and the conduit 12. The thermistor 58 contained in a probe is inserted in the rectum or any other suitable locality of the patient's body while the thermistor 62 is placed in contiguous relationship with the blanket 10 in order to sense the temperature of fluid passing through the conduit 12.

The variable resistor 68 is adjusted to control the patient's body temperature at 30 degrees centigrade (86 degrees Fahrenheit), for example, whereby the control device of the present invention will automatically hold the patient's body temperature at this predetermined value during a surgical operation or other treatment of the patient as desired. The variable resistor 68 is adjustable by means of a conventional dial knob which may project from a control panel conveniently located for operation by a technician.

A water-glycerol or other suitable fluid in the conduit 12 and tanks 20 and 26 is circulated by operation of the pump 42 as hereinbefore described in order to provide heat exchange from the fluid to the patient or from the patient to the fluid depending upon the relative temperature thereof. The source of fluid in the tank 26 is preferably maintained between 32 to 35 degrees Fahrenheit while the water-glycerol solution in the hot tank 20 is maintained at around one hundred forty degrees Fahrenheit. Fluid in both tanks 20 and 26 is maintained at its respective temperature by thermostatic control means which operates automatically.

Preparatory to a surgical operation the temperature control device for hypo-thermia treatment of a patient is used to cool the patient. Since the variable resistor 68 is set to predetermine a patient's hypo temperature at which the thermistors 58 and 62 will balance the bridge 56, the control device of the present system tends initially to maintain the solenoid valve 24 open and the solenoid valve 18 closed whereby cooled fluid flows through the conduit 12. The pump 42 continually pumps fluid from the conduit 45 through the conduit 34 and into the tank 26 via the conduit 38. The cold fluid passes outwardly through the solenoid valve 24 and into the conduit 14 via the conduit 22. As the patient is cooled by the fluid flowing through the conduit 12 his temperature gradually decreases during which time the solenoid valve 24 is energized and maintained in open position by electrical energy conducted through the switch 106 which is held closed by the holding coil 102 energized through the contact arm 94 and contact 98 communicating with the coil 86. The coil 86 is energized, as hereinbefore described, through the contact 116 and switch 118 which receives D.C. current from the circuit 122.

As the patient's temperature decreases the cold fluid conducted from the tank 26 is maintained at its thermostatically controlled temperature at around 32 to 35 degrees Fahrenheit. When, for example, as shown in FIG. 5, the patient's temperature is reduced from a normal of 98.6 degrees F. (37.5 degrees C.) down to around 91.5 degrees F. (33 degrees C.) the bridge 56 becomes balanced even though the patient has not yet reached the predetermined hypo temperature which is, for this example, 86 degrees F. (30 degrees C.). The bridge has been adjusted to balance at substantially 86 degrees F. (30 degrees C.), for example, by the variable resistor 68 when both the thermistors 58 and 62 sense the same temperature 86 degrees F. (30 degrees C.). However, the bridge will balance when the temperature sensed by the thermistor 58 is more than the predetermined temperature of 30 degrees C. (86 degrees F.) by an amount equalling a percentage of the difference between the predetermined temperature and that sensed by the thermistor 62. Said percentage is determined by the ratio of resistance effect imposed in the bridge by temperature changes sensed by thermistors 58 and 62. It will therefore be understood that the bridge 56 will balance when the patient's temperature has reduced a predetermined amount but has not yet reached the desired hypo temperature of 30 degrees C. (86 degrees F.) at which the bridge is set to balance by the variable resistor 68. When the bridge is thus balanced no current flows to the coil 84

and hence the contact arm 118 as it moves away from the contact 116 during normal sampling action the coil 86 is de-energized and the contact arm 94 moves to a null position. This shuts off current to the solenoid valve 24 which then closes. The pump 42 continues to circulate fluid through the conduit 12 by means of the bypass conduit 50 in communication with the check valve 48. At this time the temperature of the fluid begins to increase due to exchange of heat from the patient's body and the body temperature of the patient continues to reduce due to initial external cooling and further due to the temperature of the liquid being circulated in the system. The liquid is continually heated by the patient until it approaches the predetermined temperature of 86 degrees F. (30 degrees C.) while the patient's body temperature gradually reduces toward said predetermined temperature 86 degrees F.

If the fluid in the conduit 12 warms up too rapidly with respect to a decrease in the temperature of the patient the ten to one sensitivity ratio between the thermistors 58 and 62 will cause an unbalance of the bridge 56 which energizes the coil 84 and closes the arm 94 with the contact 98 thereby energizing the solenoid valve 24 to induce more cold fluid to flow into the conduit 12. Conversely, if the patient's body temperature as sensed by the thermistor 58 reduces too rapidly with respect to the fluid temperature sensed by the thermistor 62 the bridge 56 will become unbalanced in the opposite direction thereby causing an opposite polar energization of the coil 84 to move the contact arm 94 into engagement with the contact 96 thereby energizing the holding coil 100 and closing the switch 104 into engagement with a contact 108 to energize the solenoid 18 and thereby permit hot water to flow into the conduit 12 so that the patient's body temperature will not go down too rapidly and undershoot the predetermined temperature of 30 degrees C. (86 degrees F.). This latter condition does not usually occur since the sensitivity ratio between the thermistors 58 and 62 is set to coincide with the characteristics of the average patient whose thermal capacity is quite well established. Thus, the solenoid valve 24 is usually shut off at a temperature of about 91.4 degrees F. (33 degrees C.), for example, and by operation of the solenoid valve 24 alone, as hereinbefore described, the patient's body temperature may be reduced to the predetermined value of 86 degrees F. (30 degrees C.) as set by the variable resistor 68. When the patient's body temperature reaches this predetermined temperature and when the fluid temperature in the conduit 12 also reaches this temperature the bridge balances and in this condition both solenoid valves 18 and 24 are closed. Since the thermistor 58 has a much more sensitive effect on balance of the bridge 56 than does the sensitivity of the thermistor 62, very slight changes in the patient's body temperature when at the predetermined hypo temperature of 86 degrees F. cause the bridge to unbalance and open either of the solenoid valves 18 or 24 depending upon whether the patient's temperature has reduced slightly or risen slightly.

As shown in FIG. 5 the broken lines which straddle the slope line C indicate a control dead band of approximately 0.1 degree C. wherein both solenoid valves 18 and 24 are closed. Thus, the patient's temperature is maintained within very close tolerances during and following the reduction of his temperature from 33 degrees C. down to the predetermined hypo temperature of 30 degrees C. (86 degrees F.).

The tanks 20 and 26, having large amounts of hot and cold fluid, respectively, permit the control system rapidly to induce heating or cooling fluid into the conduit 12 in order rapidly to overcome a thermal tendency of the patient when his hypo temperature varies from its predetermined value.

In the modification of the present invention as shown in FIG. 2 in which a slightly different form of sensing circuit 156 is used in place of the bridge circuit 56 and a magnetic amplifier 154 is used to replace the relay circuit 54.

In this form, a modified bridge is used in which the thermistor 58, having the same function of sensing temperature of the patient's body is connected in series with the resistor 158 to form the circuit 160. The thermistor 62, having the same function of sensing temperature of the fluid passing through the conduit 12, is connected in series with the variable resistor 162 to form the circuit 164 and the variable resistor 68 is connected in series with resistor 168 to form the circuit 170. The battery 176 is provided with a conductor 172 attached to one pole and a conductor 174 attached to the other pole. The circuits 160, 164 and 170 are attached respectively in parallel between conductors 172 and 174 as shown.

The magnetic amplifier, as shown schematically as 154 on FIG. 2, operates on the principle of relative saturation of magnetic cores 178 and 180. The output coils 182 and 184 are connected at point 136. The other end of the output coil 182 is connected to one end of the coil of solenoid 18 through conductor 188 and the free end of output coil 184 is connected to one end of the coil of solenoid 24 through conductor 190. The other ends of the solenoid coils are jointed at point 192. Alternating current power is supplied through conductors 194 and 196 to point 186 and 192, respectively. It will be seen that two parallel circuits are provided between the A.C. leads 194 and 196, one through coil 182, conductor 188, and solenoid 18 and the other through coil 184, conductor 190, and solenoid 24. It will further be seen by those skilled in the art that the magnetic inductive characteristics of these circuits are such that high impedance is offered to the flow of current by coils 182 and 184 unless there is action of the control circuits as described later, and that without the control circuit action substantially no current will be allowed to flow in these circuits.

Control over magnetic saturation of the circuit is provided in the input coils 198 and 200 and the bias coils 202. The control coils 198 are connected with conductor 204 to the center of circuit 160 between resistor 158 and thermistor 58 and connected by conductor 206 to the center of circuit 170 between resistor 168 and variable resistor 68. The control coils 200 are connected by conductor 208 to the center of circuit 164 between thermistor 62 and variable resistor 162 and connected by conductor 210 to conductor 206. The bias coil 202 is connected by conductor 212 through variable resistor 214 to conductor 174 and through conductor 216 to conductor 172, thus providing a bias voltage from battery 176. In practice, the variable resistors 68 and 162 are adjusted so that the voltages in conductors 206 and 208, respectively, are equal to the voltage in conductor 204 when the thermistors 58 and 62 are at a nominal temperature, such as 86 degrees F. (30 degrees C.), in the normal operating range of the device. The variable resistor 214 is adjusted so that the current flowing in the bias coils 202 is just below the saturation level of the magnetic circuit, so that the impedance of coils 182 and 184 is substantially high so as to prevent current flow, but a small current flow in control windings 198 and/or 200 will produce saturation in one of cores 178 or 180 thus allowing current flow in coil 182 or 184. Since one half of coils 198 and 200 is each wound to be additive to bias coil 202 and the other half of each coil is opposite or subtractive, saturation can only occur in coil 182 for positive control current or in coil 184 for negative control current. Furthermore, the ratio of turns in control coils 200 relative to the turns in control coils 198 is such that, for equal currents in each coil, the effect of coil 200 in producing magnetic saturation is much less than that of coil 198.

In order to visualize the operation of the system, assume that the variable resistor 68 has been set to select patient's temperature at a value relatively lower than

his actual temperature. Thus, the resistance of thermistor 58 will be substantially lower than the equilibrium value and the voltage at conductor 204 will be less than that at conductor 206, causing current to flow through coil 198 from conductor 206 to conductor 204. This negative current in combination with the bias current in coil 202 will cause saturation of magnetic circuit 180, thus substantially reducing the impedance of coil 184 and allowing current flow through the solenoid 24 thereby passing cold fluid through the blanket. The effect of the cold fluid will be to increase the resistance of thermistor 62, increasing the voltage in conductor 208, and causing current to flow from conductor 208 through coil 200 and conductor 210 to conductor 206. If the fluid temperature reaches a sufficiently low value so that the relative effect of current flow in coil 200 cancels the effect of flow in coil 198, as determined by the turns ratio of the coils, the circuit will be neutralized with both solenoids closed and fluid passing through valve 48. However, since the fluid must be maintained substantially cooler than the patient to maintain this balance, the patient's temperature will be reduced to approach the desired value.

As the patient's temperature approaches the desired value the voltage in conductor 204 will increase and current flow in coil 198 will decrease. In order to maintain the balance, the fluid temperature must increase, producing a decrease in voltage of conductor 208 and a corresponding decrease in current flow in coil 200. Experience has shown this can usually be expected due to normal heating of the circulating fluid due to heat transfer from the patient and the external environment and also the heat dissipated by the circulating pump. However, if the patient's temperature decreases to rapidly the negative current in coil 198 will not be sufficient to cancel the current in coil 200, and the impedance of magnetic circuit 178 will be reduced, allowing coil 182 to conduct and opening solenoid 18, with a resulting increase in fluid temperature. Correspondingly, too slow reduction of patient temperature will result in energizing solenoid 24, causing further cooling of the fluid. The complete system will reach equilibrium only when the fluid temperature and patient temperature have stabilized at values close enough to the temperature selected through adjustment of variable resistor 68 so that no heat transfer to or from the patient results.

In the modification of the present invention as shown in FIG. 3 another form of bridge circuit 238 is used in place of the bridge circuit 56, and a conventional vacuum tube amplifier 218 is used in place of the relay circuit 54.

In this form of the invention the bridge circuit has an alternating current excitation provided by the secondary winding 228 of a transformer 240 which has an alternating current voltage supplied to the primary winding 230 between terminals 242 and 244. It will be seen that resistors 68, 234 and a portion 71 of the calibration resistor 70 form 180 degrees of the bridge 238 while a portion 73 of the calibration resistor 70, a conventional temperature sensitive resistor 232, which exhibits in increase in resistance with an increase in temperature, and the thermistor 58 form an opposed 180 degrees of the bridge 238. Conductors 270 and 272 connect the secondary winding 228 to the bridge 238 as shown. In this form the thermistor 58 has the same function of sensing temperature of the patient's body while the resistor 232 is placed contiguous to the blanket 10 in order to sense temperature of the fluid passing through conduit 12.

In this form of the invention it is also apparent that the greater sensitivity of thermistors to temperature changes as compared to conventional temperature sensing resistance elements will result in a greater effect in the bridge 238 of a given patient temperature change than will a similar fluid temperature change in conduit 12. It will also be apparent to those skilled in the art that the addition of resistors in series and in parallel with resistor 232 as resistors 66 and 64 were added to thermistor 62 will further reduce the effect in the bridge 238 of a given fluid temperature change.

It will be seen that resistor 68 performs the same function of providing means for adjusting the bridge to predetermine a temperature at which thermistor 58 and resistor 232 will respond to balance the bridge.

Conductors 246 and 248 are connected to the central portions of the opposed one hundred eighty degree sections of the bridge in order to measure the unbalance thereof so that an appropriate signal may be conducted to the input stage 250 of the conventional vacuum tube amplifier 218.

It is apparent that there is no voltage difference between conductors 246 and 248 when the bridge is in balance. It is also apparent that with the alternating current excitation supplied to the bridge 238 the magnitude of the voltage difference between conductors 246 and 248 is related only to the amount of bridge unbalance but the polarity of this voltage difference is related to the direction of bridge unbalance. Thus, it will be apparent to those skilled in the art that the voltage difference between conductors 246 and 248 when properly amplified in amplifier 218 will appear as a larger voltage difference between the input 258 to the output stage 260 of the amplifier and the center tap 252 of another secondary winding 226 of transformer 240. This larger voltage difference, having been correctly compensated by conventional techniques familiar to those skilled in the art for amplifier phase shift characteristics between the input and output stages of amplifier 218 will be in phase with the output plate supply voltage between the center tap 252 of the secondary winding 226 and one end of the secondary winding and 180 degrees out of phase with the supply voltage between the center tap 252 and the other end of the secondary winding 226. By way of explanation consider the following example; where the bridge is initially at balance as determined by coincidence of patient temperature and fluid temperatures at the temperature predetermined by adjustment of resistor 68. In this condition there is no voltage difference between conductors 246 and 248 and furthermore no voltage difference between conductors 258 and 252 of the output stage 260 of amplifier 218. A pair of resistors are provided as bias resistors in the output stage 260 of amplifier 218 so that both output tubes 266 and 268 are cut off when there is no voltage difference between conductors 258 and 252.

The design of the output stage 260, so the quiescent current flowing in the output tubes and hence in the solenoid coils 24 and 18 during cutoff is not adequate to energize either solenoid, is apparent to those skilled in the art. Resistor 222 is added to the output stage to provide a means of balance so variations in output tube characteristics can be compensated.

Under the foregoing conditions attention is directed to the operation of the circuit in FIG. 3 when the patient temperature decreases from the temperature at balance. The resistance value of thermistor 58 increases causing a voltage difference to appear between conductors 246 and 248. The phase of this voltage difference is such that the voltage at conductor 246 is in phase with the voltage at one end 262 of the secondary winding 228 and therefore the phase compensated and amplified voltage difference appearing between conductors 258 and 252 will be in phase with the plate supply voltage from end 254 to center tap 252 of secondary winding 226. Thus, the output tube 266 will conduct causing the hot solenoid 18 to be energized to conduct hold fluid through conduit 12 to warm the patient. Conversely when the patient temperature increases from the temperature at balance the resistance value of thermistor 58 decreases causing a voltage difference to appear between conductors 246 and 248. The phase of this voltage difference is such that the voltage at conductor 246 is in phase with the voltage at the other end 261 of the secondary winding 238 and there-

fore the phase compensated and amplified voltage difference appearing between conductors 258 and 252 will be in phase with the plate supply voltage from end 256 to center tap 252 of secondary winding 226. Thus, the output tube 263 will conduct causing the cold solenoid 24 to be energized to conduct cold fluid through conduit 12 to cool the patient.

As shown in FIG. 4 of the drawing the bridge circuit disclosed in FIG. 3 of the drawings may be coupled to the relay as shown in FIG. 1 of the drawings. It will be seen that the conductors 246 and 248 may be connected with the conductors 82 and 80, respectively, as shown in FIG. 1 of the drawings, in order to energize the coil 84 in adjacent relationship with the coil 86 as disclosed in FIG. 1 of the drawings. Further, the bridge as shown in FIG. 4 of the drawings may be energized by a battery 76 in place of the transformer 240 shown in FIG. 3 of the drawings. Thus, the battery 76 is interposed between conductors 270 and 272 which correspond with the conductors 74 and 78, as shown in FIG. 1 of the drawings.

Reference is now made to FIG. 5 of the drawings wherein operation of the temperature control device for hypo-thermia treatment of a patient is graphically illustrated. A scale A illustrates the temperature of fluid passing through the conduit 12 in the blanket 10 while a scale B illustrates rectal body temperatures of a patient; the fluid temperature being sensed by the thermistor 62 while the patient's body temperature is sensed by the thermistor 58, as hereinbefore described. It will be noted, however, that various modifications of the invention disclose equivalents of these temperature sensing elements and that, in all instances, the patient body temperature has a greater effect on functions of the present control device than does the fluid teperature.

The control characteristic of the devices described herein is represented on FIG. 5 by the line C for a condition in which the selection potentiometer 68 is set to 30 degrees C. (86 degrees F.). These controls normally have a "dead band" or threshold illustrated by the two dash lines parallel to line C. When the combination of patient and fluid temperatures lies within these dash lines, the control system is in "neutral" with the fluid flow through the check valve 48 and both solenoids 18 and 24 closed. If the patient and fluid temperatures define a point to the right of the dash lines, the cold solenoid 24 will be open and the circulation of cold fluid will reduce the patient's temperature, and if the two temperatures define a point to the left of the dash lines, the hot solenoid will be open to warm the patient. The minimum temperature of the circulating fluid is limited to 32 to 35 degrees F. (0.2 degree C.) by the refrigeration thermostat 33 to prevent frostbite and the maximum temperature of the circulating fluid is limited to about 114 degrees F. (45 degrees C.) by the action of thermostat 16. The calibration of the temperature selection potentiometer 68 is based upon the fact that when the fluid temperature is equal to the patient temperature the system is in equilibrium and no heat transfer occurs to or from the patient.

The temperature values as illustrated in FIG. 5 are only by way of example since these values may be varied somewhat as desired without changing the operating characteristics of the control device. As hereinbefore described, the effect of the thermistor 58 relative to the effect of the thermistor 62 in response to a temperature change is based upon a ten to one ratio. This ratio may be varied as desired by changing the resistance or electrical components in the bridge or other circuitry of the present invention so that the response ratio between the body temperature sensing element and the fluid temperature sensing element may be arranged to accommodate various conditions as desired.

It will be apparent to those skilled in the art that other forms, relays and amplifiers such as transistor amplifiers and combination transistor-magnetic amplifiers can be used in place of the examples presently disclosed; it will also be apparent to those skilled in the art that other forms of bridge circuits can be used in place of the three examples shown herein, however, it is pointed out that this disclosure of the presently preferred embodiment of the invention may suggest to those skilled in the art these as well as other substitutions and modifications which properly lie within the spirit and scope of the appended claims.

We claim:

1. In a temperature control device for hypo-thermia treatment of a patient the combination of: a fluid conducting heat exchange device applicable to a patient for exchanging heat to or from him; a first conduit disposed to deliver fluid to said heat exchanger; a second fluid conduit disposed to conduct fluid from said heat exchanger; first and second thermally controlled tanks communicating with said first conduit and containing hot and cold fluid respectively; first and second electro-magnetic valves disposed to control the flow of said hot and cold fluid respectively into said first conduit; means for circulating fluid from said tanks through said heat exchanger and back to said tanks; a control circuit coupled to said valves comprising an electrical bridge; a first temperature sensing electrical element of said bridge disposed to sense body temperature of a patient; a second temperature sensing electrical element of said bridge disposed to sense the temperature of said heat exhanger; a variable electrical element in said bridge adjustable to predetermine temperatures at which said first and second elements will respond to balance said bridge; a series and a shunt resistance element coupled to said second element and tending to minimize the response effect thereof relative to said first element; and means responsive alternately to polar unbalance of said bridge, for respectively operating either of said first or second valves.

2. In a temperature control device for hypo-thermia treatment of a patient the combination of: a fluid conducting heat exchange device applicable to a patient for exchanging heat to or from him; a first fluid conduit disposed to deliver fluid to said heat exchanger; a second fluid conduit disposed to conduct fluid from said heat exchanger; first and second thermally controlled tanks communciating with said first conduit and containing hot and cold fluid respectively; first and second electromagnetic valves disposed to control the flow of said hot and cold fluid respectively into said first conduit; means for circulating fluid from said tanks through said heat exchanger and back to said tanks; a control circuit coupled to said valves comprising a resistance bridge; a first temperature sensing electrical resistance element of said bridge disposed to sense body temperature of a patient; a second temperature sensing electrical resistance element of said bridge disposed to sense the temperature of said heat exchanger; a variable resistance element in said bridge adjustable to predetermine a temperature at which said first and second elements will respond to balance said bridge; a series and a shunt resistance element coupled to said second element and tending to minimize the response effect thereof relative to said first element; and means responsive alternately to polar unbalance of said bridge, for respectively operating either of said first or second valves.

3. In a temperature control device for hypo-thermia treatment of a patient the combination of: a fluid conducting heat exchange device applicable to a patient for exchanging heat to or from him; a first fluid conduit disposed to deliver fluid to said heat exchanger; a second fluid conduit disposed to conduct fluid from said heat exchanger; first and second thermally controlled tanks communicating with said first conduit and containing hot and cold fluid respectively; first and second electromagnetic valves disposed to control the flow of said hot and cold fluid respectively into said first conduit; means

for circulating fluid from said tanks through said heat exchanger and back to said tanks; a control circuit coupled to said valves comprising a resistance bridge; a first temperature sensing electrical resistance element of said bridge disposed to sense body temperature of a patient; a second temperature sensing electrical resistance element of said bridge disposed to sense the temperature of said heat exchanger; a variable resistance element in said bridge adjustable to predetermine temperatures at which said first and second elements will respond to balance said bridge; a shunt resistance element coupled to said second element and tending to minimize the response effect thereof relative to said first element; and a polarized relay means coupled to said bridge and having switch means provided with first and second contacts disposed alternately to be engaged depending upon the polarity of unbalance of said bridge; said first and second contacts coupled to said first and second valves.

4. In a temperature control device for hypo-thermia treatment of a patient the combination of: a fluid conducting heat exchange device applicable to a patient for exchanging heat to or from him; a first fluid conduit disposed to deliver fluid to said heat exchanger; a second fluid conduit disposed to conduct fluid from said heat exchanger; first and second thermally controlled tanks communicating with said first conduit and containing hot and cold fluid respectively; first and second electro-magnetic valves disposed to control the flow of hot and cold fluid respectively into said first conduit; means for circulating fluid from said tanks through said heat exchanger and back to said tanks; a control circuit coupled to said valves comprising an electrical bridge; a first temperature sensing electrical element of said bridge disposed to sense body temperature of a patient; a second temperature sensing electrical element of said bridge disposed to sense the temperature of said heat exchanger; a variable electrical element in said bridge adjustable to predetermine temperatures at which said first and second elements will respond to balance said bridge; said second element comprising means having substantially less sensitivity to temperature changes than that of said first element; and means responsive alternately to polar changes of said bridge; for respectively operating either of said first or second valves.

5. In a temperature control device for hypo-thermia treatment of a patient the combination of: a fluid conducting heat exchange device applicable to a patient for exchanging heat to or from him; a first fluid conduit disposed to deliver fluid to said heat exchanger; a second fluid conduit disposed to conduct fluid from said heat exchanger; first and second thermally controlled tanks communicating with said first conduit and containing hot and cold fluid respectively; first and second electro-magnetic valves disposed to control the flow of said hot and cold fluid respectively into said first conduit; means for circulating fluid from said tanks through said heat exchanger and back to said tanks; a control circuit coupled to said valves comprising an electrical bridge; a first temperature sensing electrical element of said bridge disposed to sense body temperature of a patient; a second temperature sensing electrical element of said bridge disposed to sense the temperature of said heat exchanger; a variable electrical element in said bridge adjustable to predetermine temperatures at which said first and second elements will respond to balance said bridge; said second element comprising means having substantially less effectivity in the bridge in response to temperature changes than that of said first element; and a polarized relay means coupled to said bridge and having switch means provided with first and second contacts disposed alternately to be engaged depending upon the polarity changes of said bridge for respectively energizing either of said first and second valves.

6. In a temperature control device for hypo-thermia treatment of a patient the combination of: a fluid conducting heat exchange device applicable to a patient for exchanging heat to or from him; a first fluid conduit disposed to deliver fluid to said heat exchanger; a second fluid conduit disposed to conduct fluid from said heat exchanger; first and second thermally controlled tanks communicating with said first conduit and containing hot and cold fluid respectively; first and second electro-magnetic valves disposed to control the flow of said hot and cold fluid respectively into said first conduit; means for circulating fluid from said tanks through said heat exchanger and back to said tanks; an electrical control circuit coupled to said valves; a first temperature sensing electrical element of said control circuit disposed to sense body temperature of a patient; a second temperature sensing electrical element of said control circuit disposed to sense the temperature of said heat exchanger; an element in said control circuit to predetermine temperatures at which said first and second elements will respond to cause the output of said control circuit to become zero; said second element comprising means having substantially less effectivity in the control circuit in response to temperature changes than that of said first element; and means responsive alternately to polar changes of said control circuit; for respectively operating either of said first or second valves.

7. In a temperature control device for hypo-thermia treatment of a patient the combination of: a fluid conducting heat exchange device applicable to a patient for exchanging heat to or from him; a first fluid conduit disposed to deliver fluid to said heat exchanger; a second fluid conduit disposed to conduct fluid from said heat exchanger; first and second thermally controlled tanks communicating with said first conduit and containing hot and cold fluid respectively; first and second electro-magnetic valves disposed to control the flow of said hot and cold fluid respectively into said first conduit; means for circulating fluid from said tanks through said heat exchanger and back to said tanks; a bypass valve operable to permit fluid to bypass said tanks and flow directly from said means to said first conduit when said valves are closed; a control circuit coupled to said valves comprising an electrical bridge; a first temperature sensing electrical element of said bridge disposed to sense body temperature of a patient; a second temperature sensing electrical element of said bridge disposed to sense the temperature of said heat exchanger; an element in said bridge to predetermine temperatures at which said first and second elements will respond to balance said bridge; said second element comprising means having substantially less effectivity in the bridge in response to temperature changes than that of said first element; and means responsive alternately to polar changes of said bridge; for respectively operating either of said first or second valves.

8. In a temperature control device for hypo-thermia treatment of a patient the combination of: a fluid conducting heat exchange device applicable to a patient for exchanging heat to or from him; a first fluid conduit disposed to deliver fluid to said heat exchanger; a second fluid conduit disposed to conduct fluid from said heat exchanger; first and second thermally controlled tanks communicating with said first conduit and containing hot and cold fluid respectively; first and second electro-magnetic valves disposed to control the flow of said hot and cold fluid respectively into said first conduit; means for circulating fluid from said tanks through said heat exchanger and back to said tanks; an electrical control circuit coupled to said valves; a first temperature sensing electrical element of said control circuit disposed to sense body temperature of a patient; a second temperature sensing electrical element of said control circuit disposed to sense the temperature of said heat exchanger; an element in said control circuit disposed to predetermine temperatures at which said first and second element will respond to nullify the electrical output of said control circuit; said second element comprising means having

substantially less effectivity in said control circuit in response to temperature changes than that of said first element; and amplifier means responsive alternately to polar changes of said control circuit; for respectively operating either of said first or second valves.

9. In a temperature control device for hypo-thermia treatment of a patient the combination of: a fluid conducting heat exchange device applicable to a patient for exchanging heat to or from him; a first fluid conduit disposed to deliver fluid to said heat exchanger; a second fluid conduit disposed to conduct fluid from said heat exchanger; first and second thermally controlled tanks communicating with said first conduit and containing hot and cold fluid respectively; first and second valves disposed to control the flow of said hot and cold fluid respectively into said first conduit; means for circulating fluid from said tanks through said heat exchanger and back to said tanks; an electrical control circuit coupled to said valves; a first temperature sensing electrical element of said control circuit disposed to sense body temperature of a patient; a second temperature sensing electrical element of said control circuit disposed to sense the temperature of said heat exchanger; an element in said control circuit disposed to predetermine temperatures at which said first and second element will respond to nullify the electrical output of said control circuit; said second element comprising means having substantially less effectivity in said control circuit in response to temperature changes than that of said first element; and magnetic amplifier means responsive alternately to polar changes of said control circuit; for respectively operating either of said first or second valves.

10. In a temperature control device for hypo-thermia treatment of a patient the combination of: a fluid conducting heat exchange device applicable to a patient for exchanging heat to or from him; a first fluid conduit disposed to deliver fluid to said heat exchanger; a second fluid conduit disposed to conduct fluid from said heat exchanger; first and second thermally controlled tanks communicating with said first conduit and containing hot and cold fluid respectively; first and second electro-magnetic valves disposed to control the flow of said hot and cold fluid respectively into said first conduit; means for circulating fluid from said tanks through said heat exchanger and back to said tanks; a bypass valve operable to permit fluid to bypass said tanks and flow directly from said means to said conduit when said valves are closed; an electrical control circuit coupled to said valves; a first temperature sensing electrical element of said control circuit disposed to sense body temperature of a patient; a second temperature sensing electrical element of said control circuit disposed to sense the temperature of said heat exchanger; an element in said control circuit to predetermine temperatures at which said first and second elements will respond to nullify the electrical output of said control circuit; said second element comprising means having substantially less effectivity in the control circuit in response to temperature changes than that of said first element; and means responsive alternately to polar changes of said control circuit; for respectively operating either of said first or second valves.

11. In a temperature control device for hypo-thermia treatment of a patient the combination of: a fluid conducting heat exchange device applicable to a patient for exchanging heat to or from him; a first fluid conduit disposed to deliver fluid to said heat exchanger; a second fluid conduit disposed to conduct fluid from said heat exchanger; first and second thermally controlled tanks communicating with said first conduit and containing hot and cold fluid respectively; first and second electro-magnetic valves disposed to control the flow of said hot and cold fluid respectively into said first conduit; means for circulating fluid from said tanks through said heat exchanger and back to said tanks; a control circuit coupled to said valves comprising an electrical bridge; a thermistor of said bridge disposed to sense body temperature of a patient; a temperature sensitive resistor element of said bridge disposed to sense the temperature of said heat exchanger; an adjustable element in said bridge to predetermine temperatures at which said first and second elements will respond to balance said bridge; said temperature sensitive resistor element having substantially less effectivity in the bridge in response to temperature changes than that of said first element; and means responsive alternately to polar unbalance of said bridge; for respectively operating either of said first or second valves.

12. In a temperature control device for hypo-thermia treatment of a patient the combination of: a fluid conducting heat exchange device applicable to a patient for exchanging heat to or from him; a first fluid conduit disposed to deliver fluid to said heat exchanger; a second fluid conduit disposed to conduct fluid from said heat exchanger; first and second thermally controlled tanks communicating with said first conduit and containing hot and cold fluid respectively; first and second electro-magnetic valves disposed to control the flow of said hot and cold fluid respectively into said first conduit; means for circulating fluid from said tanks through said heat exchanger and back to said tanks; a bypass valve operable to permit fluid to bypass said tanks and flow directly from said means to said first conduit when said valves are closed; an electrical control circuit coupled to said valves; a first temperature sensing electrical element of said control circuit disposed to sense body temperature of a patient; a second temperature sensing electrical element of said control circuit disposed to sense the temperature of said heat exchanger; an element in said control circuit to predetermine temperatures at which said first and second elements will respond to nullify the electrical output of said control circuit; said second element comprising means having substantially less effectivity in said control circuit in response to temperature changes than that of said first element; and electronic amplifier means responsive alternately to polar changes of said control circuit; for respectively energizing either of said first or second solenoid valves.

References Cited in the file of this patent

UNITED STATES PATENTS

1,914,026	Kirk	June 13, 1933
2,223,669	Forshll	Dec. 3, 1940
2,260,134	Ballman	Oct. 21, 1941
2,726,658	Chessey	Dec. 13, 1955