US 20010000538A1

(19) **United States**

(12) **Patent Application Publication** (10) **Pub. No.: US 2001/0000538 A1**

Kowaguchi (43) **Pub. Date: Apr. 26, 2001**

(54) **ELECTRONIC MAIL SYSTEM, ELECTRONIC MAIL SERVER, AND COMMUNICATION TERMINAL**

(76) Inventor: **Satoshi Kowaguchi**, Tokyo (JP)

Correspondence Address:
Scully, Scott, Murphy & Presser
400 Garden City Plaza
Garden City, NY 11530 (US)

(21) Appl. No.: **09/733,678**

(22) Filed: **Dec. 8, 2000**

Related U.S. Application Data

(62) Division of application No. 09/182,040, filed on Oct. 29, 1998, now Pat. No. 6,185,605.

(30) **Foreign Application Priority Data**

Nov. 11, 1997 (JP) 327093/1997

Publication Classification

(51) **Int. Cl.**[7] **G06F 15/177**; G06F 15/16; H04M 11/00

(52) **U.S. Cl.** **709/245**; 709/206; 379/100.08; 379/93.24

(57) **ABSTRACT**

Disclosed is an electronic mail system, which comprises: a transmitting communication terminal for transmitting an electronic mail to which an address is added; an electronic mail server for storing an electronic mail transmitted from the transmitting communication terminal; and a receiving communication terminal for receiving an electronic mail having an address thereof from the electronic mail server, wherein the electronic mail server comprises: managing means for managing an address and call number of the receiving communication terminal; receiving means for receiving an electronic mail from the transmitting communication terminal; storing means for storing the electronic mail received by the receiving means; retrieving means for retrieving a call number of the receiving communication terminal managed by the managing means corresponding to an address added to the electronic mail received by the receiving means; and distributing means for transmitting the electronic mail received by the receiving means to the receiving communication terminal having the call number retrieved by the retrieving means, and wherein the receiving means comprises: receiving means for receiving the electronic mail distributed by the distributing means.

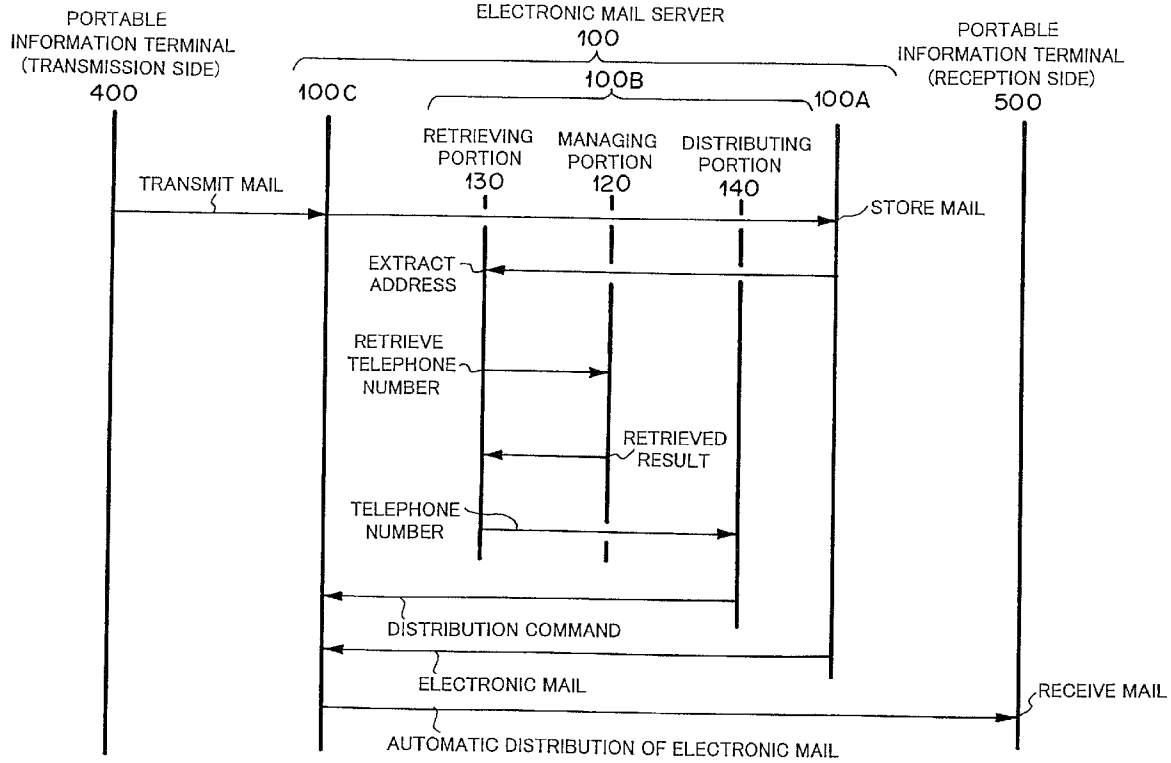

FIG. 1

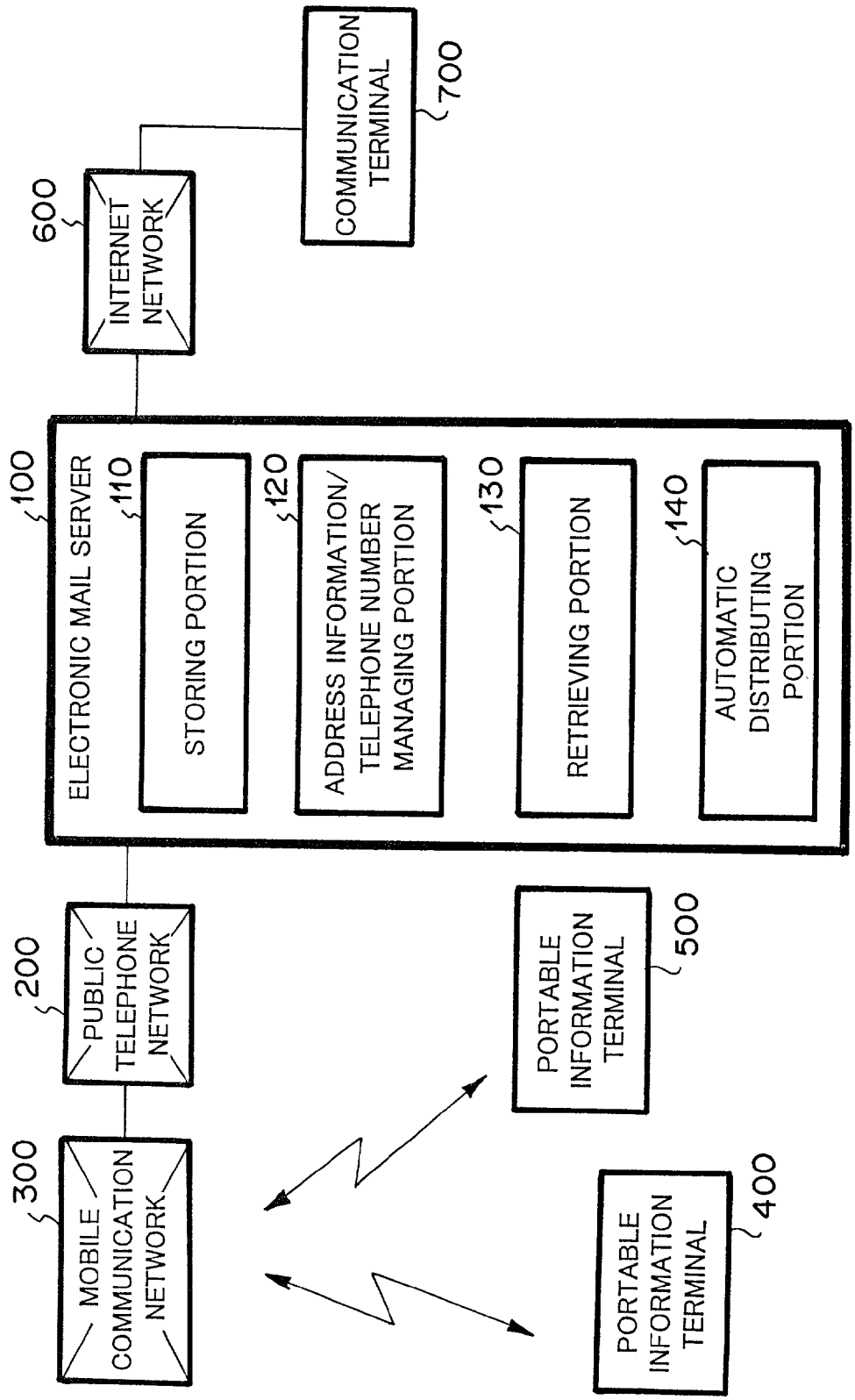
COMMUNICATION TERMINAL
700
600
INTERNET NETWORK
100
ELECTRONIC MAIL SERVER
110
STORING PORTION
120
ADDRESS INFORMATION/ TELEPHONE NUMBER MANAGING PORTION
130
RETRIEVING PORTION
140
AUTOMATIC DISTRIBUTING PORTION
200
PUBLIC TELEPHONE NETWORK
300
MOBILE COMMUNICATION NETWORK
PORTABLE INFORMATION TERMINAL
500
PORTABLE INFORMATION TERMINAL
400

FIG. 2

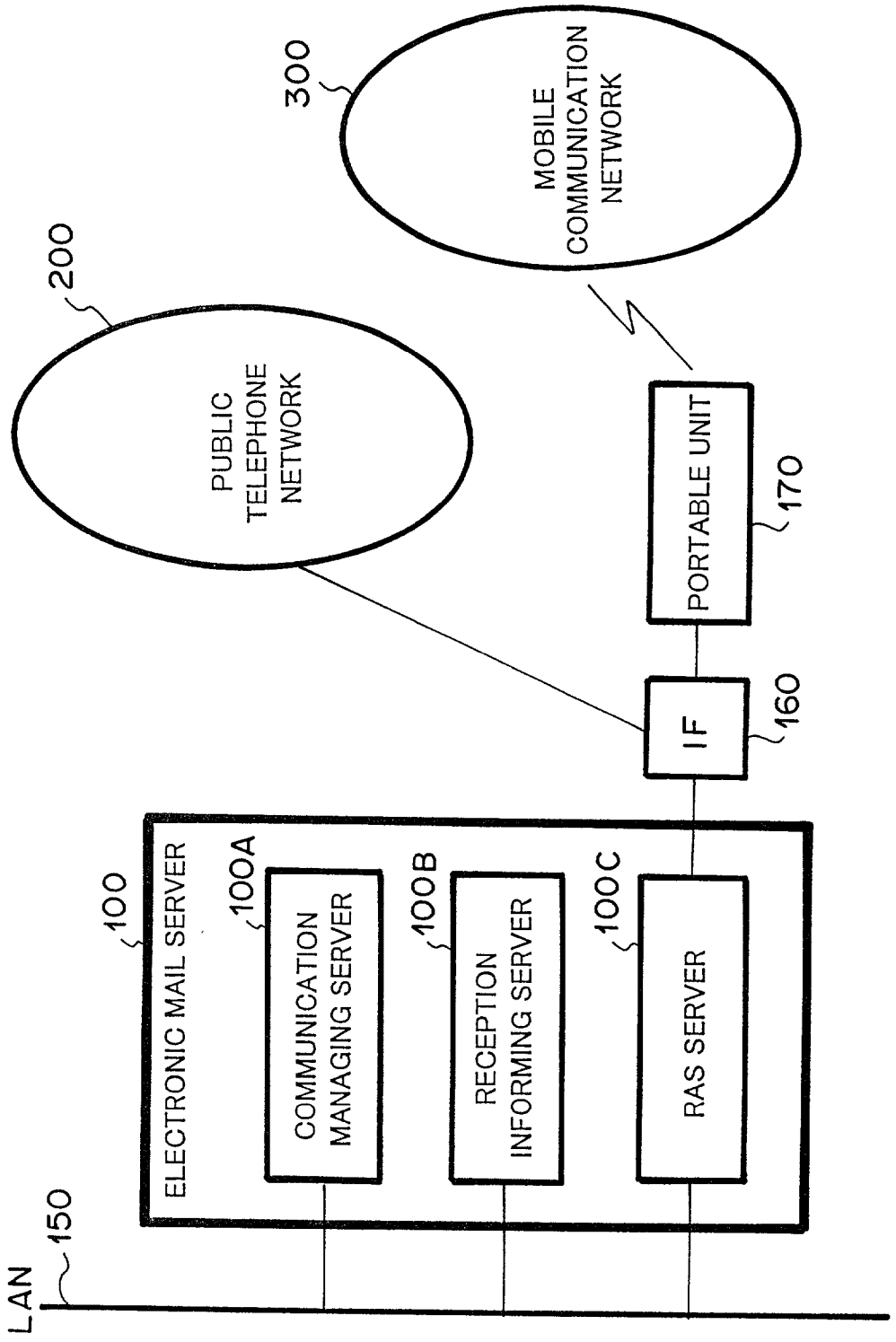
300
MOBILE COMMUNICATION NETWORK
200
PUBLIC TELEPHONE NETWORK
PORTABLE UNIT
170
IF
160
100
ELECTRONIC MAIL SERVER
100A
COMMUNICATION MANAGING SERVER
100B
RECEPTION INFORMING SERVER
100C
RAS SERVER
150
LAN

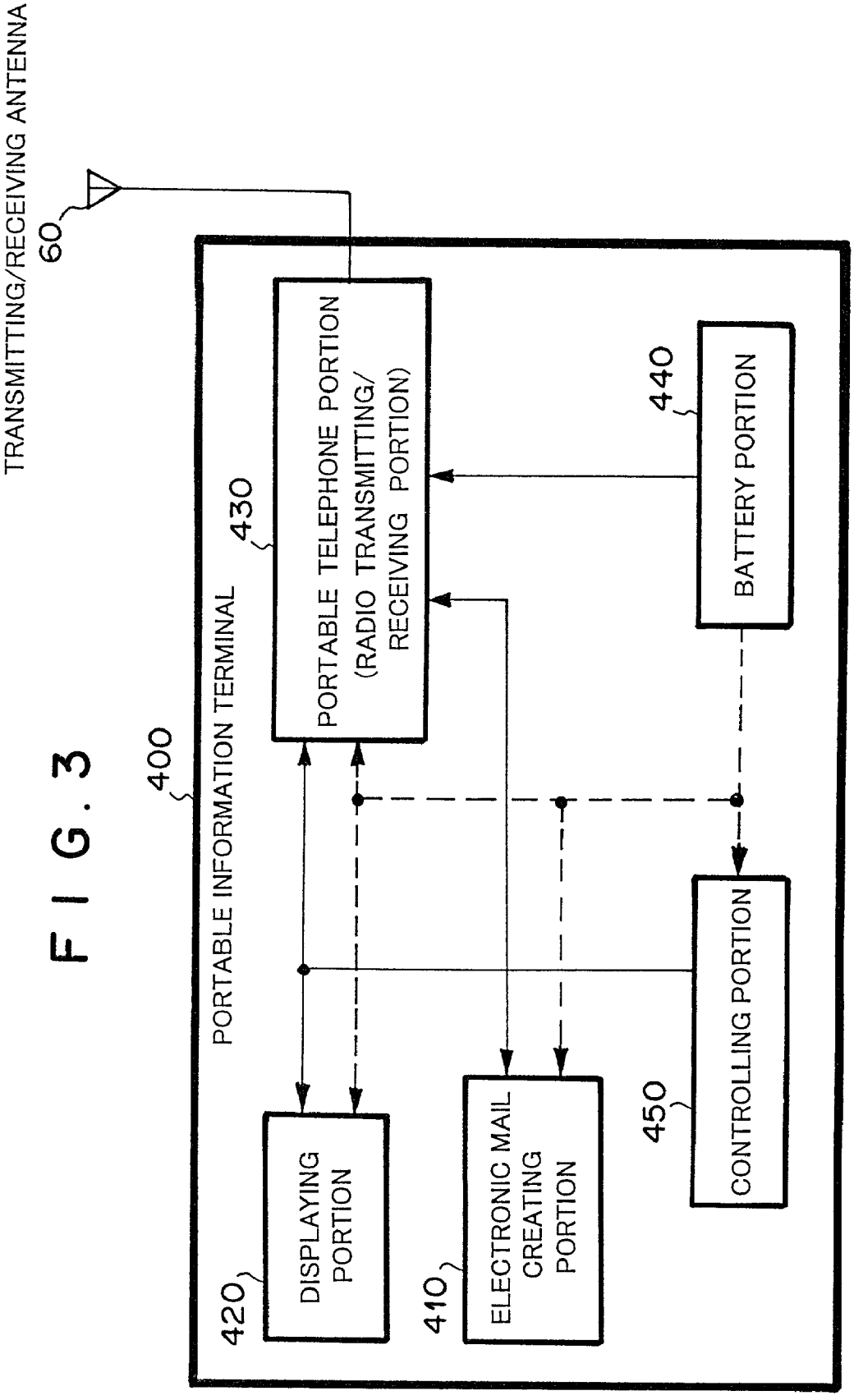
TRANSMITTING/RECEIVING ANTENNA
60
400
PORTABLE INFORMATION TERMINAL
430
PORTABLE TELEPHONE PORTION (RADIO TRANSMITTING/ RECEIVING PORTION)
440
BATTERY PORTION
420
DISPLAYING PORTION
410
ELECTRONIC MAIL CREATING PORTION
450
CONTROLLING PORTION

FIG. 3

FIG. 4

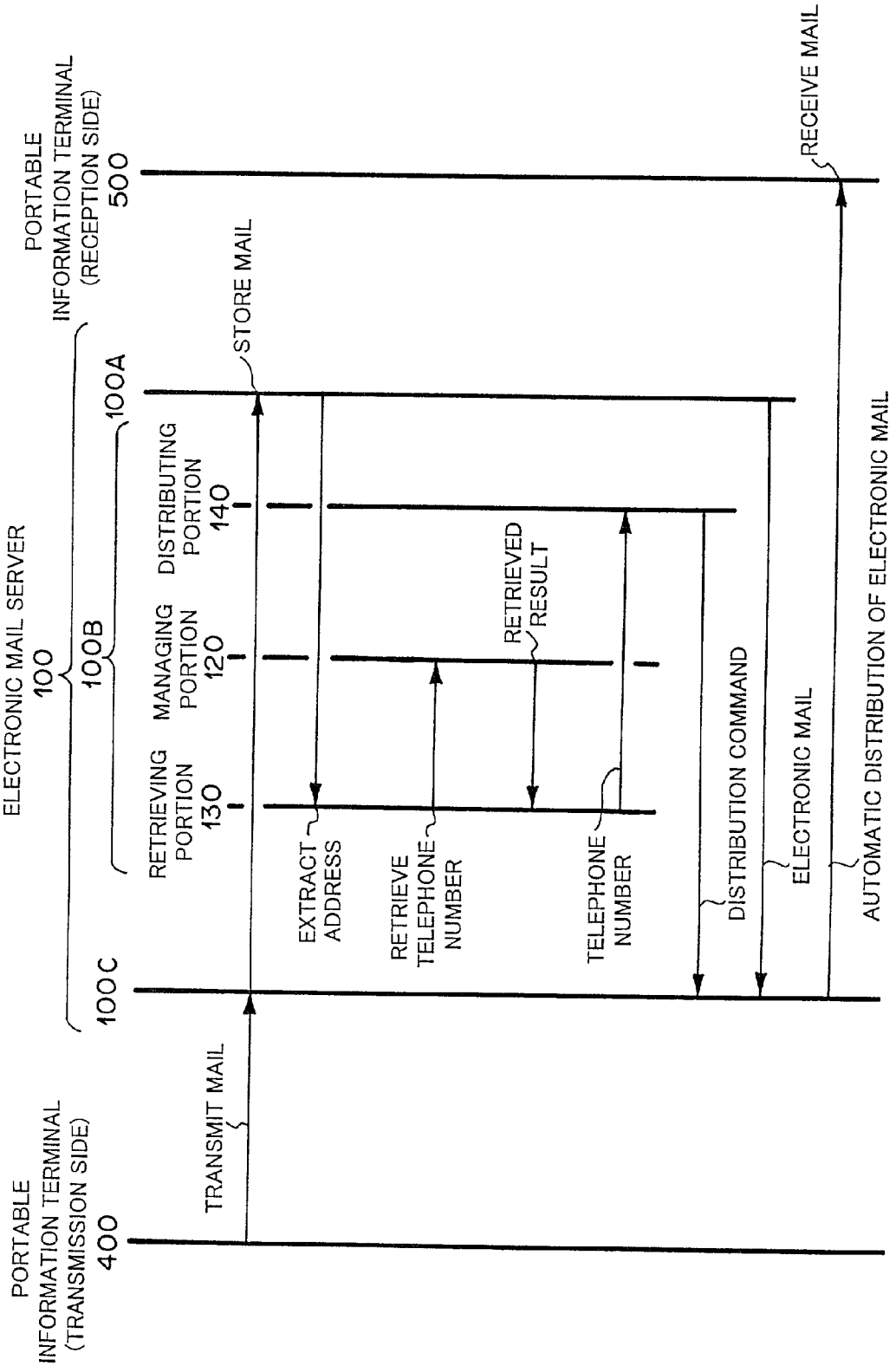
ELECTRONIC MAIL SERVER
100
100A
100B
100C
PORTABLE INFORMATION TERMINAL (TRANSMISSION SIDE)
400
PORTABLE INFORMATION TERMINAL (RECEPTION SIDE)
500
RETRIEVING PORTION 130
MANAGING PORTION 120
DISTRIBUTING PORTION 140
TRANSMIT MAIL
STORE MAIL
EXTRACT ADDRESS
RETRIEVE TELEPHONE NUMBER
RETRIEVED RESULT
TELEPHONE NUMBER
DISTRIBUTION COMMAND
ELECTRONIC MAIL
AUTOMATIC DISTRIBUTION OF ELECTRONIC MAIL
RECEIVE MAIL

FIG. 5

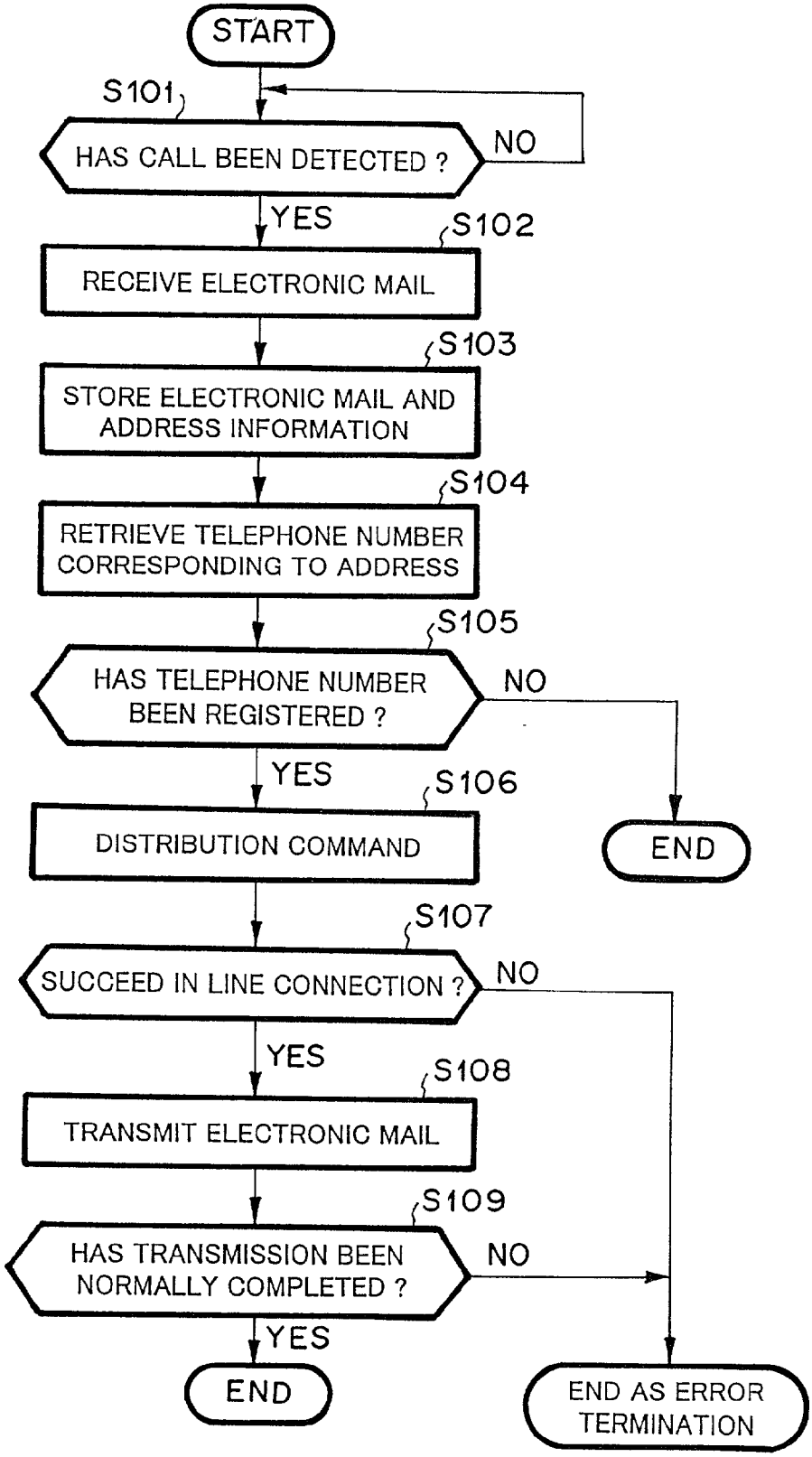
START
S101
HAS CALL BEEN DETECTED ?
NO
YES
S102
RECEIVE ELECTRONIC MAIL
S103
STORE ELECTRONIC MAIL AND ADDRESS INFORMATION
S104
RETRIEVE TELEPHONE NUMBER CORRESPONDING TO ADDRESS
S105
HAS TELEPHONE NUMBER BEEN REGISTERED ?
NO
YES
S106
DISTRIBUTION COMMAND
END
S107
SUCCEED IN LINE CONNECTION ?
NO
YES
S108
TRANSMIT ELECTRONIC MAIL
S109
HAS TRANSMISSION BEEN NORMALLY COMPLETED ?
NO
YES
END
END AS ERROR TERMINATION

FIG.6A

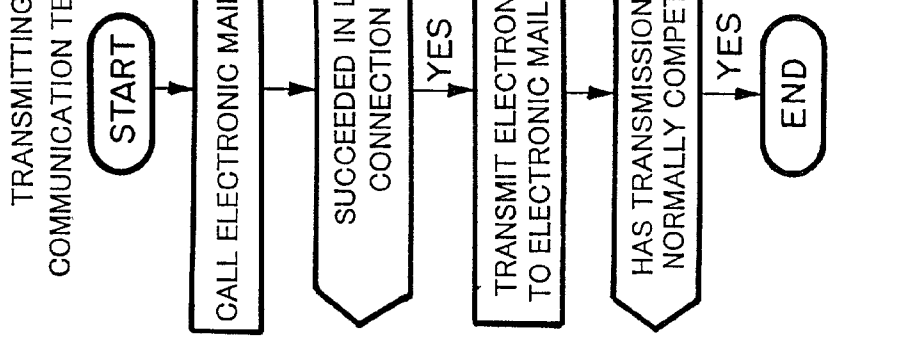
TRANSMITTING COMMUNICATION TERMINAL
START
S401
CALL ELECTRONIC MAIL SERVER
S402
SUCCEEDED IN LINE CONNECTION ?
NO
YES
S403
TRANSMIT ELECTRONIC MAIL TO ELECTRONIC MAIL SERVER
S404
HAS TRANSMISSION BEEN NORMALLY COMPETED ?
NO
YES
END
END AS ERROR TERMINATION

FIG.6B

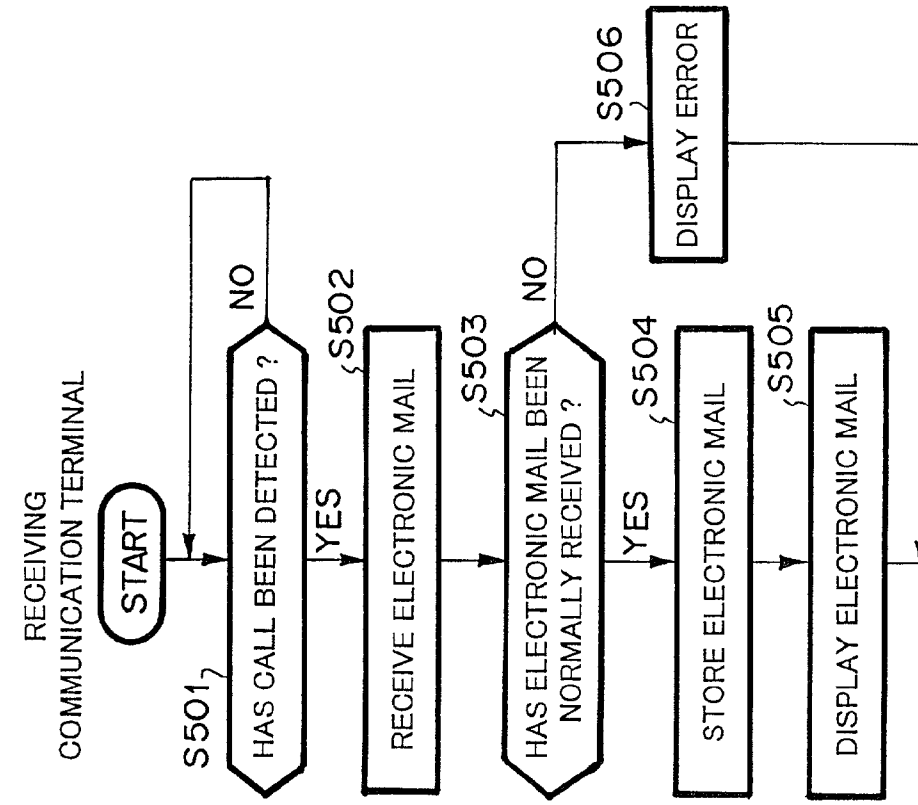
RECEIVING COMMUNICATION TERMINAL
START
S501
HAS CALL BEEN DETECTED ?
NO
YES
S502
RECEIVE ELECTRONIC MAIL
S503
HAS ELECTRONIC MAIL BEEN NORMALLY RECEIVED ?
NO
YES
S504
STORE ELECTRONIC MAIL
S505
DISPLAY ELECTRONIC MAIL
S506
DISPLAY ERROR
END

ELECTRONIC MAIL SYSTEM, ELECTRONIC MAIL SERVER, AND COMMUNICATION TERMINAL

BACKGROUND OF THE INVENTION

[0001] 1. Field of the Invention

[0002] The present invention relates to an electronic mail system, an electronic mail server, and a communication terminal.

[0003] 2. Description of the Prior Art

[0004] In a conventional electronic mail system, an electronic mail is transmitted from a transmitting communication terminal and the transmitted electronic mail is stored in an electronic mail server. A receiving communication terminal accesses the electronic mail server so as to retrieve the electronic mail addressed to the receiving communication terminal from the electronic mail server.

[0005] The electronic mail server registers and manages address information of the receiving communication terminals. The transmitting communication terminal adds the address information to an electronic mail and transmits the addressed electronic mail to the electronic mail server. The electronic mail server stores the received electronic mail in a mail box corresponding to the address information added to the electronic mail.

[0006] The receiving communication terminal asks the electronic main server for an electronic mail addressed to the receiving communication terminal. When the electronic mail server has stored an electronic mail addressed to the receiving communication terminal, the receiving communication terminal sends an electronic mail retrieval request to the electronic mail server and receives the electronic main therefrom.

[0007] In such an electronic mail system, when the electronic mail server has received an electronic mail addressed to a receiving communication terminal, the receiving communication terminal cannot be informed of the electronic mail stored in the mail box of the electronic mail server. Thus, the receiving communication terminal cannot receive an urgent electronic mail.

[0008] In order to solve such a problem, when the electronic mail server has received an electronic mail addressed to a receiving communication terminal or pager registered in the electronic mail server, it informs the registered receiving communication terminal or pager of the reception of the electronic mail. Thus, the user of the registered receiving communication terminal or pager can know that the electronic mail server has received the electronic mail addressed to the user. This electronic mail system has been proposed in, for example, JPA-5-110596 and JPA-2-21969.

[0009] However, the conventional electronic mail system having such a reception informing function only informs the reception-side-user of the fact that the electronic mail server has received an electronic mail addressed to the user. Thus, the reception-side-user needs to transmit an electronic mail retrieval request to the electronic mail server and receive the electronic mail therefrom. Consequently, in the conventional electronic mail system, the reception-side-user needs to perform complicated operations.

SUMMARY OF THE INVENTION

[0010] Therefore, an object of the present invention is to provide an electronic mail system, an electronic mail server, and a communication terminal that enables a receiving communication terminal to automatically receive an electronic mail addressed thereto in real time.

[0011] According to a first aspect of the present invention, there is provided an electronic mail system, which comprises: a transmitting communication terminal for transmitting an electronic mail to which an address is added; an electronic mail server for storing a electronic mail transmitted from the transmitting communication terminal; and a receiving communication terminal for receiving a electronic mail having an address thereof from the electronic mail server, wherein the electronic mail server comprises: managing means for managing an address and call number of the receiving communication terminal; receiving means for receiving an electronic mail from the transmitting communication terminal; storing means for storing the electronic mail received by the receiving means; retrieving means for retrieving a call number of the receiving communication terminal managed by the managing means corresponding to an address added to the electronic mail received by the receiving means; and distributing means for transmitting the electronic mail received by the receiving means to the receiving communication terminal having the call number retrieved by the retrieving means, and wherein the receiving means comprises: receiving means for receiving the electronic mail distributed by the distributing means.

[0012] In such an electronic mail system, when the electronic mail server has received an electronic mail from a transmitting communication terminal, the electronic mail server retrieves a call number such as a telephone number registered corresponding to address added to the electronic mail and automatically distributes the received electronic mail to the receiving communication terminal having the call number. The receiving communication terminal receives the electronic mail from the electronic mail server. Thus, the receiving communication terminal can automatically receive the electronic mail from the transmitting communication terminal.

[0013] According to a second aspect of the present invention, there is provided an electronic mail server, which comprises: managing means for managing an address and call number of a receiving communication terminal; receiving means for receiving an electronic mail from a transmitting communication terminal; storing means for storing the electronic mail received by the receiving means; retrieving means for retrieving a call number of the receiving communication terminal managed by the managing means corresponding to an address added to the electronic mail received by the receiving means; and distributing means for transmitting the electronic mail received by the receiving means to the receiving communication terminal having the call number retrieved by the retrieving means.

[0014] When such an electronic mail server has received an electronic mail from a transmitting communication terminal, the electronic mail server retrieves a call number registered corresponding to address added to the electronic mail and automatically distributes the received electronic mail to a receiving communication terminal having the call number. Thus, the receiving communication terminal can

automatically receive the electronic mail from the transmitting communication terminal.

[0015] According to a third aspect of the present invention, there is provided a communication terminal whose address and call number are managed by an electronic mail server having distributing means, which terminal comprises: electronic mail creating means for creating an electronic mail; electronic mail storing means for storing the electronic mail; electronic mail transmitting means for transmitting the electronic mail to the electronic mail server; receiving means for receiving an electronic mail from the electronic mail server and storing the electronic mail to the electronic mail storing means; and electronic mail displaying means for displaying the electronic mail.

[0016] In case that such a communication terminal transmits an electronic mail, an electronic mail creating means creates the electronic mail, adds address information to the created electronic mail, and transmits the resultant electronic mail to an electronic mail server having an automatic distributing means. When the communication terminal receives an electronic mail from the electronic mail server having the automatic distributing function, the communication terminal automatically receives the electronic mail, stores the electronic mail in an electronic mail storing means, displays the electronic mail on an electronic mail displaying means, and informs the user of the reception of the electronic mail. Thus, the receiving communication terminal can automatically receive an electronic mail from the transmitting communication terminal and inform the reception-side-user of the reception of the electronic mail.

[0017] These and other objects, features and advantages of the present invention will become more apparent in light of the following detailed description of the best mode of embodiments thereof, as illustrated in the accompanying drawings.

BRIEF DESCRIPTION OF DRAWINGS

[0018] **FIG. 1** is a block diagram showing an example of the structure of an electronic mail system according to the present invention;

[0019] **FIG. 2** is a block diagram showing an example of the structure of an electronic mail server in the electronic mail system shown in **FIG. 1**;

[0020] **FIG. 3** is a block diagram showing an example of the structure of a portable information terminal in the electronic mail system shown in **FIG. 1**;

[0021] **FIG. 4** is a schematic diagram for explaining a transmission/reception sequence of an electronic mail transmitted/received between each communication terminal and the electronic mail server in the electronic mail system shown in **FIG. 1**;

[0022] **FIG. 5** is a flow chart showing the operation of the electronic mail server in the electronic mail system shown in **FIG. 1**;

[0023] **FIG. 6A** is a flow chart showing the operation of a transmitting communication terminal in the electronic mail system shown in **FIG. 1**; and

[0024] **FIG. 6B** is a flow chart showing the operation of a receiving communication terminal in the electronic mail system shown in **FIG. 1**.

DESCRIPTION OF PREFERRED EMBODIMENTS

[0025] Next, an electronic mail system, an electronic mail server, and a communication terminal according to embodiments of the present invention will be explained.

[0026] In **FIG. 1**, the electronic mail system comprises electronic mail server **100**, portable information terminals (mobile communication terminals) **400** and **500**, and communication terminal **700**. Electronic mail server **100** has an automatic distributing function. Portable information terminals **400** and **500** are connected to electronic mail server **100** through public telephone network **200** and mobile communication network **300**. Communication terminal **700** is connected to electronic mail server **100** through Internet network **600**.

[0027] **FIG. 1** also shows major functions of electronic mail server **100**. As shown in **FIG. 1**, the electronic mail server **100** comprises storing portion **110**, address information/telephone number managing portion **120**, retrieving portion **130**, and automatic distributing portion **140**.

[0028] Storing portion **110** stores an electronic mail received from a transmitting communication terminal. Storing portion **110** has mail boxes corresponding to addresses (address information) of electronic mails.

[0029] Address information/telephone number managing portion **120** stores address information of destinations of electronic mails and telephone numbers of receiving communication terminals registered corresponding to the destinations, connectedly.

[0030] Retrieving portion **130** retrieves the telephone number corresponding to address information of an electronic mail received from a transmitting communication terminal from management information of address information/telephone number managing portion **120**.

[0031] Automatic distributing portion **140** calls a receiving communication terminal with a telephone number retrieved by retrieving portion **130** so as to transmit the received electronic mail to the receiving communication terminal.

[0032] In such a structure, electronic mail server **100** retrieves a telephone number of a registered receiving communication terminal corresponding to address information added to an electronic mail received from transmitting communication terminal **700** and automatically distributes the electronic mail to receiving communication terminal **400** or **500** with the telephone number.

[0033] Such a service that electronic mail server **100** provides can be used by terminals such as a conventional wired communication terminal (not shown) connected to public telephone network **200**, portable information terminals **400** and **500** connected to mobile communication network **300**, communication terminal **700** connected to Internet network **600**, and so forth.

[0034] When electronic mail server **100** receives an electronic mail addressed to a receiving communication terminal whose telephone number has not been registered, electronic mail server **100** does not automatically distribute the received electronic mail to the receiving communication terminal. In this case, electronic mail server **100** stores the

received electronic mail in the mail box in storing portion **110**. When electronic mail server **100** receives an electronic mail retrieval request from the receiving communication terminal, electronic mail server **100** transmits the electronic mail stored in the main box to the receiving communication terminal.

[**0035**] Thus, when a receiving-side-user of an electronic mail does not want to use the automatic distribution service of electronic mail server **100**, the user does not register his or her telephone number with address information/telephone number managing portion **120**. In this case, the user can use electronic mail server **100** as a conventional electronic mail server.

[**0036**] Although an telephone number is used as a call number for transmitting an electronic mail to a communication terminal in this example, any of other various access numbers may be used as a call number.

[**0037**] Referring to **FIG. 2**, electronic mail server **100** has communication managing server **100**, reception informing server **100**B, and an RAS (Remote Access Service) Server **100**C.

[**0038**] Communication managing server **100**A includes storing portion **110** explained above. When electronic mail server **100** receives an electronic mail from a transmitting communication terminal, communication managing server **100**A performs a receiving process for the electronic mail and stores the received electronic mail in storing portion **110**.

[**0039**] Reception informing server **100**B includes address information/telephone number managing portion **120**, the retrieving portion **130**, and automatic distributing portion **140**, which were explained above. Reception informing server **100**B extracts address information from the received electronic mail, retrieves a telephone number from address information/telephone number managing portion **120**, and automatically distributes the electronic mail to a receiving communication terminal having the retrieved telephone number.

[**0040**] RAS server **100**C controls a network function such as dial-up connection.

[**0041**] Communication managing server **100**A, reception informing server **100**B, and RAS server **100**C are mutually connected by a LAN (Local Area Network) so as to communicate with one another.

[**0042**] RAS server **100**C is connected to external interface **160**. RAS server **100**C is connected to public telephone network **200** through external interface **160**. External interface **160** is also connected to portable unit **170** such as a radio adaptor or a radio communication unit. RAS server **100**C is connected to mobile communication network **300** through portable unit **170**.

[**0043**] In such a structure, RAS server **100**C is connected to various communication terminals through communication networks **200**, **300**, and **600** so as to transmit/receive electronic mails to/from various communication terminals.

[**0044**] Referring to **FIG. 3**, portable information terminal **400** comprises electronic mail creating portion **410**, displaying portion **420**, portable telephone portion or radio transmitting/receiving portion **430**, battery portion **440**, controlling portion **450**, and transmitting/receiving antenna **460**.

[**0045**] Electronic mail creating portion **410** includes a data input operating portion and a data storing portion. The user creates an electronic mail by using the data input operating portion. The data storing portion stores the created electronic mail.

[**0046**] Displaying portion **420** includes a displaying panel such as an LCD (Liquid Crystal Display). The displaying panel displays an electronic mail that is being or has been created by using the electronic mail creating portion and an electronic mail that has been received. In addition, displaying portion **420** displays various data other than electronic mails.

[**0047**] Portable telephone portion **430** transmits/receives radio data through transmitting/receiving antenna **460**. Battery portion **440** supplies power to each portion of portable communication terminal **400**. Controlling portion **450** controls each portion of portable communication terminal **400**.

[**0048**] The wired communication terminal used in the present invention has the above-explained electronic mail creating portion and electronic mail displaying portion.

[**0049**] Next, the controlling operation of the electronic mail system will be explained along with the automatic distributing function of the electronic mail server.

[**0050**] **FIG. 4** is a schematic diagram for explaining a transmission/reception sequence of an electronic mail transmitted/received between each communication terminal and electronic mail server **100** in the system.

[**0051**] In **FIG. 4**, portable information terminal **400** shown in **FIG. 1** is a transmitting communication terminal and that portable information terminal **500** is a receiving communication terminal. **FIG. 4** shows the operations of servers **100**A, **100**B, and **100**C of electronic server **100** for an electronic mail transmitted from portable information terminal **400**.

[**0052**] **FIG. 5** is a flow chart showing the operation of electronic mail server **100**. **FIG. 6A** is a flow chart showing the operation of transmitting communication terminal **400**. **FIG. 6B** is a flow chart showing the operation of receiving communication terminal **500**.

[**0053**] The transmitting communication terminal i.e. portable information terminal **400** calls electronic mail server **100** at step S**401**, confirms whether the line is connected at step S**402**, and transmits an electronic mail created by using electronic mail creating portion **410** to electronic mail server **100** at step S**403**.

[**0054**] When the electronic mail is transmitted, transmitting communication terminal **400** adds a destination address to the electronic mail. For example, transmitting communication terminal **400** adds address information "aaa@bbb.or.jp" to the electronic mail. Electronic mail server **100** uses account "aaa" for retrieving a telephone number corresponding to the address information.

[**0055**] Thereafter, transmitting communication terminal **400** confirms whether the electronic mail has been normally transmitted to electronic mail server **100** and completes the process at step S**404**. When the line can not be connected at step S**402** or when a transmission error has taken place at

step S404, the transmitting communication terminal completes the process as an error termination. Then, transmitting communication terminal 400 performs, for example, a re-transmitting process.

[0056] When electronic mail server 100 has received the electronic mail at step S101, electronic mail server 100 transfers the electronic mail to communication managing server 100A through the external interface 160 and the RAS server 100C. The communication managing server 100A performs a predetermined receiving process at step S102 and stores the electronic mail and the address thereof in storing portion 110 at step S103.

[0057] Next, retrieving portion 130 extracts the account "aaa" from the address information of the electronic mail, and confirms whether or not account "aaa" has been registered in address information/telephone number managing portion 120 at step S104.

[0058] Address information/telephone number managing portion 120 has registered a telephone number of a receiving communication terminal corresponding to the address information. For example, if address information/telephone number managing portion 120 has registered telephone number "010-12-34567" corresponding to account "aaa", then the data registration format becomes "aaa 010-12-34567".

[0059] Retrieving portion 130 retrieves the telephone number "010-12-34567" corresponding to account "aaa" from address information/telephone number managing portion 120 at step S105.

[0060] Retrieving portion 130 transfers retrieved telephone number "010-12-34567" to automatic distributing portion 140. Automatic distributing portion 140 causes RAS server 100C to call portable information terminal 500 having telephone number "010-12-34567" at step S106. After the line has been connected at step S107, automatic distributing portion 140 transmits the electronic mail stored in storing portion 110 to portable information terminal 500 at step S108.

[0061] Thereafter, electronic mail server 100 confirms whether the electronic mail has been normally transmitted to portable information terminal 500 to complete the process at step S109. When the line can not be connected at step S107 or when a transmission error has taken place at step S109, electronic mail server 100 completes the process as an error termination and then performs, for example, a re-transmitting process.

[0062] At step S105, when retrieving portion 130 has not retrieved the telephone number, electronic mail server 100 completes the process. In this case, electronic mail server 100 transmits the electronic mail after receiving an electronic mail retrieval request from the receiving communication terminal.

[0063] When the electronic mail is transmitted from communication terminal 700 to portable information terminal 500 via Internet network 600 and LAN 150, the similar operation is performed. However, when an electronic mail is transmitted/received between PC (Personal Computer) clients in Internet network 600, unless address information/telephone number managing portion 120 has registered their telephone numbers, electronic mail server 100 does not perform the automatic distributing function.

[0064] When electronic mail server 100 starts to automatically distribute an electronic mail to portable information terminal 500, portable information terminal 500 detects a call received from a line at step S501, performs a predetermined receiving process, and receives the electronic mail at step S502.

[0065] When portable information terminal has normally received the electronic mail at step S503, the storing portion of electronic mail creating portion 410 stores the electronic mail at step S504. Then, displaying portion 420 displays the electronic mail at step S505 and completes the receiving process.

[0066] A message that represents the reception of an electronic mail may be displayed on displaying portion 420 instead of the electronic mail itself.

[0067] When portable information terminal 500 has not normally received an electronic mail at step S503, displaying portion 420 displays an error message at step S506 and completes the receiving process.

[0068] In the above-explained example, electronic mail server 100 determines whether or not to automatically distribute an electronic mail dependently on whether a telephone number corresponding to address information of the electronic mail has been registered. However, when the telephone number has been registered, the user can select an automatic distribution mode for causing an electronic mail to be automatically distributed, or a reception informing mode for informing the user of the reception of an electronic mail.

[0069] In this case, address information/telephone number managing portion 120 registers an identifier for identifying the automatic distribution mode or reception informing mode along with address information and telephone number. When the identifier represents the automatic distribution mode, the electronic mail server transmits a received electronic mail to a receiving communication terminal having a telephone number corresponding to address information added to the electronic mail. When the identifier represents the reception informing mode, the electronic mail server informs the user of the receiving communication terminal of the reception of the electronic mail.

[0070] As explained above, in the electronic mail system according to the present invention, when an electronic mail server has received an electronic mail from a transmitting communication terminal, the electronic mail server retrieves a call number such as a telephone number registered corresponding to address information added to the electronic mail and automatically distributes the received electronic mail to the receiving communication terminal having the call number, whereby the receiving communication terminal receives the electronic mail from the electronic mail server.

[0071] Thus, the receiving communication terminal can automatically receive the electronic mail from the transmitting communication terminal. The user of the receiving communication terminal need not to spontaneously retrieve an electronic mail from the electronic mail server. Consequently, a very convenient electronic mail system can be provided.

[0072] When the electronic mail server according to the present invention has received an electronic mail from a

transmitting communication terminal, the electronic mail server retrieves a call number registered corresponding to address information added to the electronic mail and automatically distributes the received electronic mail to a receiving communication terminal having the call number.

[0073] Thus, the receiving communication terminal can automatically receive the electronic mail from the transmitting communication terminal. The user of the receiving communication terminal need not to spontaneously retrieve an electronic mail from the electronic mail server. Consequently, a very convenient electronic mail server can be provided.

[0074] In case that the communication terminal according to the present invention transmits an electronic mail, the communication terminal adds address information to an electronic mail created by using the electronic mail creating means, and then transmits the resultant electronic mail to an electronic mail server. When the communication terminal according to the present invention receives an electronic mail from the electronic mail server, the communication terminal automatically receives the electronic mail, stores the electronic mail in the electronic mail storing means, displays the electronic mail on the electronic mail displaying means, and informs the user of the reception of the electronic mail.

[0075] Thus, the communication terminal can automatically receive an electronic mail from the transmitting communication terminal and inform the user of the reception of the electronic mail. The user of the communication terminal need not to spontaneously retrieve an electronic mail from the electronic mail server. Consequently, a very convenient communication terminal can be provided.

[0076] Although the present invention has been shown and explained with respect to the best mode of embodiment thereof, it should be understood by those skilled in the art that the foregoing and various other changes, omissions, and additions in the form and detail thereof may be made therein without departing from the spirit and scope of the present invention.

What is claimed is:

1. An electronic mail system, which comprises:

a transmitting communication terminal for transmitting an electronic mail to which an address is added;

an electronic mail server for storing a electronic mail transmitted from said transmitting communication terminal; and

a receiving communication terminal for receiving an electronic mail having an address thereof from said electronic mail server,

wherein said electronic mail server comprises:

managing means for managing an address and call number of said receiving communication terminal;

receiving means for receiving an electronic mail from said transmitting communication terminal;

storing means for storing the electronic mail received by said receiving means;

retrieving means for retrieving a call number of said receiving communication terminal managed by said managing means corresponding to an address added to the electronic mail received by said receiving means; and

distributing means for transmitting the electronic mail received by said receiving means to said receiving communication terminal having the call number retrieved by said retrieving means, and

wherein said receiving means comprises:

receiving means for receiving the electronic mail distributed by said distributing means.

2. The electronic mail system as set forth in claim 1,

wherein at least one of said receiving communication terminal and said transmitting communication terminal is a mobile communication terminal connected to a mobile communication network.

3. The electronic mail system as set forth in claim 1,

wherein at least one of said receiving communication terminal and said transmitting communication terminal is a wired communication terminal connected to a wired communication network.

4. An electronic mail server, which comprises:

managing means for managing an address and call number of a receiving communication terminal;

receiving means for receiving an electronic mail from a transmitting communication terminal;

storing means for storing the electronic mail received by said receiving means;

retrieving means for retrieving a call number of said receiving communication terminal managed by said managing means corresponding to an address added to the electronic mail received by said receiving means; and

distributing means for transmitting the electronic mail received by said receiving means to said receiving communication terminal having the call number retrieved by said retrieving means.

5. The electronic mail server as set forth in claim 4, which further comprises:

a communication management server having said receiving means and said storing means;

reception informing server having said managing means, said retrieving means, and said distributing means;

a line interface connected to a communication network; and

a connection controlling server for controlling the connection of the transmitting communication terminal and the receiving communication terminal through said line interface.

6. The electronic mail server as set forth in claim 5,

wherein said communication managing server, said reception informing server, and said connection controlling server are connected to one another by a local area network.

7. The electronic mail server as set forth in claim 4,

wherein said line interface is connected to a wired communication network through a wired line and to a radio communication unit through a wired line, and

wherein said radio communication unit is connected to a mobile communication network through a radio line.

8. A communication terminal whose address and call number are managed by an electronic mail server having distributing means, which terminal comprises:

electronic mail creating means for creating an electronic mail;

electronic mail storing means for storing said electronic mail;

electronic mail transmitting means for transmitting the electronic mail to the electronic mail server;

receiving means for receiving an electronic mail from said electronic mail server and storing the electronic mail to said electronic mail storing means; and

electronic mail displaying means for displaying the electronic mail.

9. The communication terminal as set forth in claim 8, which further comprises:

a radio controlling portion for transmitting and receiving data through a radio line; and

a battery portion for supplying power to the communication terminal,

thereby used as a portable communication terminal.

10. The communication terminal as set forth in claim 8, which further comprises means for adding an address corresponding to a receiving terminal to the electronic mail transmitted to said mail server.

11. The communication terminal as set forth in claim 10, which further comprises:

a radio controlling portion for transmitting and receiving data through a radio line; and

a battery portion for supplying power to the communication terminal,

thereby used as a portable communication terminal.

* * * * *