June 17, 1924. 1,498,301

L. SAARI ET AL

CAN PUNCH

Filed April 9, 1923

Fig. 3.

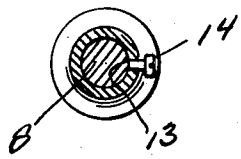

Fig. 1.

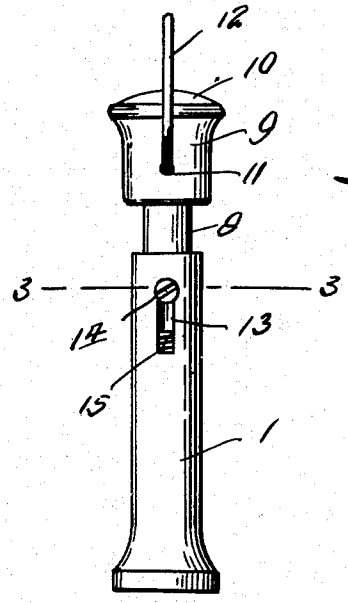

Fig. 4.

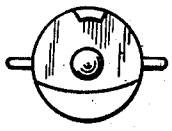

Fig. 2.

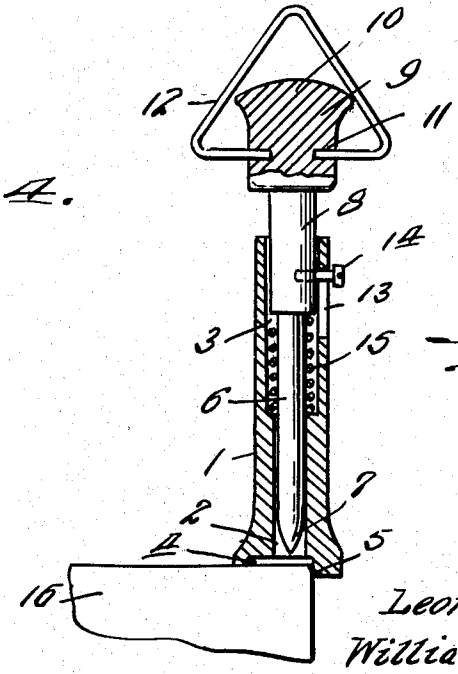

Witnesses:
F. L. Fox
H. Berman

Leonard Saari,
William Jackson
Inventor

By Clarence O'Brien
Attorney

Patented June 17, 1924. 1,498,301

UNITED STATES PATENT OFFICE.

LEONARD SAARI AND WILLIAM JACKSON, OF SUPERIOR, ARIZONA.

CAN PUNCH.

Application filed April 9, 1923. Serial No. 630,690.

To all whom it may concern:

Be it known that LEONARD SAARI and WILLIAM JACKSON, citizens of the United States, residing at Superior, in the county of Pinal and State of Arizona, have invented certain new and useful Improvements in Can Punches, of which the following is a specification.

This invention has reference to can punches and its object is to provide a means whereby a minute hole may be forced in the head of a can by a light blow of the palm of the hand, particularly for obtaining the contents of the can by pouring the same therefrom, as for instance, when the contents of the can is in the form of evaporated cream or the like, a pair of spaced holes may be produced to permit the pouring of the contents of the can through one of the holes while the entrance of air is provided for through the other hole.

In accordance with the invention there is provided a punch structure consisting of a casing with a plunger therein having a limited range of movement against the action of the spring and held to the limited movement by a set-screw or stop while there is also provided a bail by means of which the punch may be extracted from the can into which the punch is forced by a blow delivered to the punch while the bail provides means whereby the punch may be removed from the can with ease.

The punch is applied to the peripheral portion of the can by resting thereon, with the punch lifted out of contact with the can by the spring and then the punch is caused to perforate the top of the can close to one edge thereof by an impact of the blow of the hand, compressing the spring and forcing the punch through the walls of the can so far as permitted by the limitations imposed upon the movement of the punch by the set screw or other stop device. The bail is provided to permit the withdrawal of the punch from the can in case the punch should stick in its traversing movement of the punch and the bail is pivoted to permit it to be turned on its pivotal axis out of the way of the hand of the user so as not to interfere with the penetrating blow delivered to it.

The invention will be best understood from a consideration of the following detail description taken in connection with the accompanying drawings forming part of this specification with the understanding, however, that the invention is not confined to any strict conformity with the showing in the drawings but may be changed and modified so long as such changes and modifications mark no material departure from the salient features of the invention as expressed in the appended claims.

In the drawings:

Figure 1 is a side elevation of the punch;

Figure 2 is a longitudinal vertical section of the punch;

Figure 3 is a section on the line 3—3 of Figure 1; and

Figure 4 is a bottom plan view of the punch.

Referring to the drawings, there is shown a tubular post or casing 1 having an axial bore or passage 2 therethrough from end to end with the counterbore at the upper end as indicated at 3 and also countersunk for a short distance at the lower end as indicated at 4 and provided at one side of the center bore with a lug 5 concentric to the bore 2. The lug 5 is relatively long as compared with the lug provided at the opposite side of the countersink 4.

Lodged in the bore 2 is a stem 6 snugly and freely fitting therein and provided with a pointed end 7 at the lower extremity while at the upper end the stem 6 is expanded as indicated at 8 and is of sufficient length to project beyond the countersink 3 and terminates in an upper head 9 laterally expanded and having said expanded portion rounded as shown at 10 to form a striking end which may be contacted with by the hand of the user and also provides a hinge support 11 for a bail 12 of triangular contour, though not necessarily confined to such particular form.

The body portion 1 has a slot 13 therealong to pass a screw 14 limiting the movement of the enlargement 8 of the stem 6 so that the stem 6 will be limited in its longitudinal movement through the body portion 1 and the enlarged portion 8 of the stem 6 is in the path of a spring 15 having a constant tendency to urge the stem upwardly.

In constructing the can punch the bail may be made of iron or brass, the stem is made of cast iron or steel, and the outer cylinder is made of cast iron or steel. With this structure the base portion of the post 1 rests upon the top of a can 16 which may be constructed after the ordinary practice

of forming commodity cans with the tongue 5 engaging against the outer edge of the can to center the post 1 so that a hole may be formed through the top of the can by means of the pointed end 7 of the stem 6 or two such holes may be produced in spaced relation to allow the escape of the commodity from the can and the entrance of air thereinto as needed.

The spring 15 is or may be of sufficient strength to prevent the can punch from hanging against rising after the top of the can is pierced by the follower stem 6.

What is claimed is:

A can punch comprising a post provided at one end portion with a centrally located bore and at its opposite end portion with a centrally located counterbore, the counterbore being of greater diameter than the bore whereby a shoulder is provided at the meeting points of the bores, the post being provided at its side and above the shoulder in the counterbore portion with a longitudinally disposed slot, the post being provided at its lower end with a diametrically enlarged extremity, the post being provided at the said extremity and at one side of the bore with a relatively short lug and at the opposite side of the said bore with a relatively long lug, said lugs being spaced from each other at their adjacent edges, a pointed stem mounted for sliding movement in the post and having a shoulder, a spring interposed between the shoulder of the post and the shoulder of the stem and normally holding the pointed end of the stem received within the smaller bore of the post, a screw carried by the stem and passing through the slot, and a head mounted upon the upper end of the stem.

In testimony whereof we affix our signatures.

LEONARD SAARI.
WILLIAM JACKSON.