Office de la Propriété Intellectuelle du Canada
Un organisme d'Industrie Canada

Canadian Intellectual Property Office
An agency of Industry Canada

CA 2373926 A1 2000/12/28

(21) 2 373 926

(12) DEMANDE DE BREVET CANADIEN
CANADIAN PATENT APPLICATION

(13) A1

(86) Date de dépôt PCT/PCT Filing Date: 2000/06/01
(87) Date publication PCT/PCT Publication Date: 2000/12/28
(85) Entrée phase nationale/National Entry: 2001/11/06
(86) N° demande PCT/PCT Application No.: US 2000/015011
(87) N° publication PCT/PCT Publication No.: 2000/078372
(30) Priorités/Priorities: 1999/06/18 (09/336,230) US;
1999/11/10 (09/437,453) US

(51) Cl.Int.^{7}/Int.Cl.^{7} A61M 1/00, A61M 5/148, A61M 3/02

(71) Demandeur/Applicant:
ALCON MANUFACTURING, LTD., US

(72) Inventeurs/Inventors:
BOUKHNY, MIKHAIL, US;
MORGAN, MICHAEL D., US;
SORENSEN, GARY P., US

(74) Agent: KIRBY EADES GALE BAKER

(54) Titre : SYSTEME DE REGULATION DE PERFUSION
(54) Title: INFUSION CONTROL SYSTEM

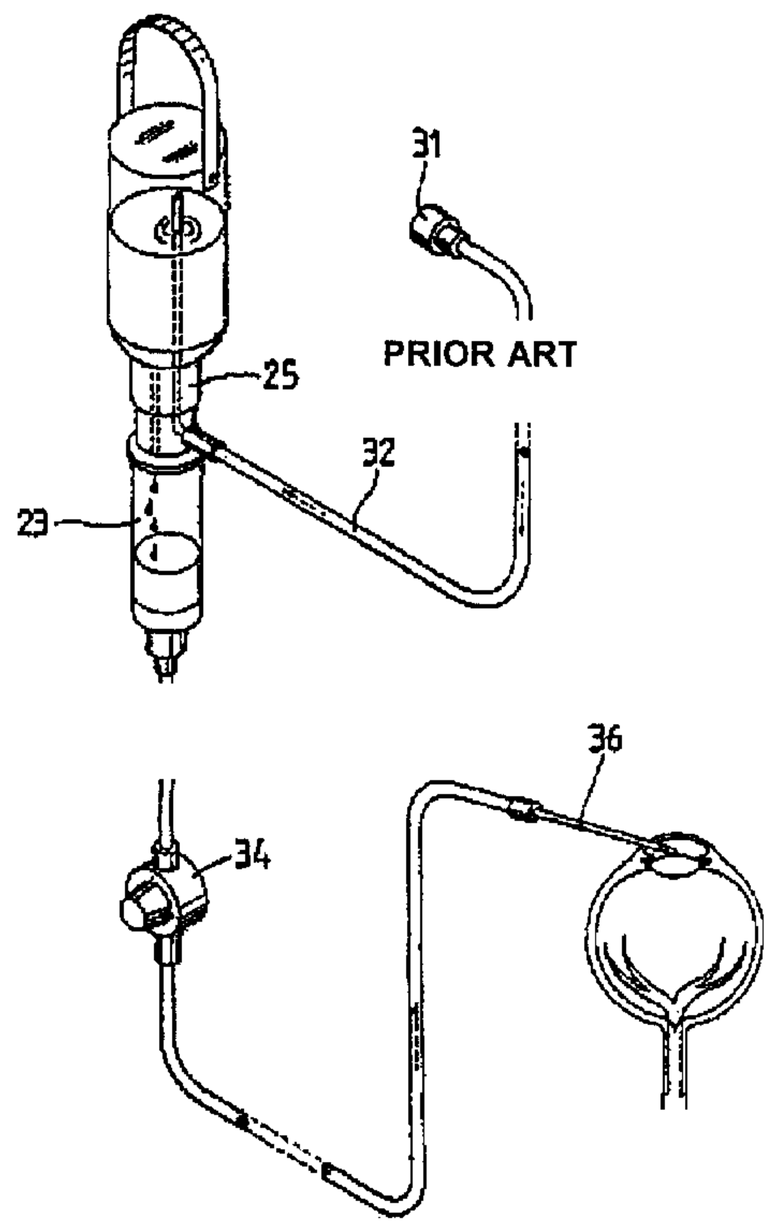

(57) Abrégé/Abstract:
An infusion control system (10) having a flexible, collapsible infusion container (26). The container (26) can be compressed between rollers (553) or plate so as to pressurize the container. Such a system allows for rapid pressure response rates without the need of venting devices or air filtering. This may also include an irrigation flow sensor (22). The sensor (22) may be placed in the control console (14) or in the infusion handpiece (12). Irrigation (12) flow measurements provided by the sensor (22) allows the control system (10) to vary irrigation pressure and/or flow, aspiration pressure and/or flow and power supplied to the handpiece (12) more accurately than sensors that monitor aspiration flow.

(12) INTERNATIONAL APPLICATION PUBLISHED UNDER THE PATENT COOPERATION TREATY (PCT)

(19) World Intellectual Property Organization
International Bureau

(43) International Publication Date
28 December 2000 (28.12.2000)

PCT

(10) International Publication Number
WO 00/78372 A1

(51) International Patent Classification[7]: A61M 1/00, 5/148, 3/02

(21) International Application Number: PCT/US00/15011

(22) International Filing Date: 1 June 2000 (01.06.2000)

(25) Filing Language: English

(26) Publication Language: English

(30) Priority Data:
09/336,230 18 June 1999 (18.06.1999) US
09/437,453 10 November 1999 (10.11.1999) US

(71) Applicant: **ALCON LABORATORIES, INC.** [US/US]; 6201 South Freeway, Fort Worth, TX 76134-2099 (US).

(72) Inventors: **BOUKHNY, Mikhail**; 174 Emerald Bay, Laguna Beach, CA 92651 (US). **MORGAN, Michael, D.**; 2665 Club Mesa, Costa Mesa, CA 92627 (US). **SORENSEN, Gary, P.**; 24932 Calle Vecindad, Lake Forest, CA 92630 (US).

(74) Agents: **SCHIRA, Jeffrey, S.** et al.; R & D Legal Dept., Q-148, Alcon Laboratories, Inc., 6201 South Freeway, Fort Worth, TX 76134-2099 (US).

(81) Designated States *(national)*: AU, BR, CA, JP, MX.

(84) Designated States *(regional)*: European patent (AT, BE, CH, CY, DE, DK, ES, FI, FR, GB, GR, IE, IT, LU, MC, NL, PT, SE).

Published:
— *With international search report.*

For two-letter codes and other abbreviations, refer to the "Guidance Notes on Codes and Abbreviations" appearing at the beginning of each regular issue of the PCT Gazette.

(54) Title: INFUSION CONTROL SYSTEM

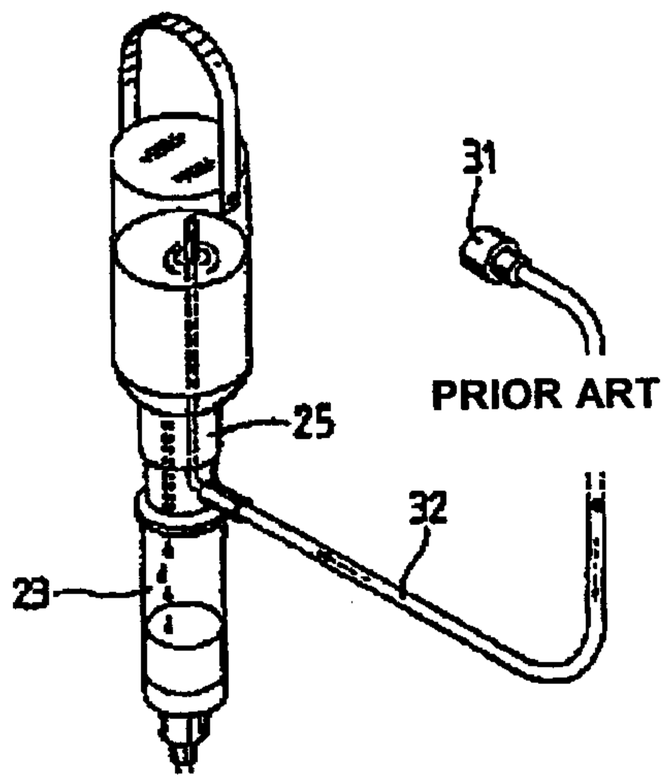

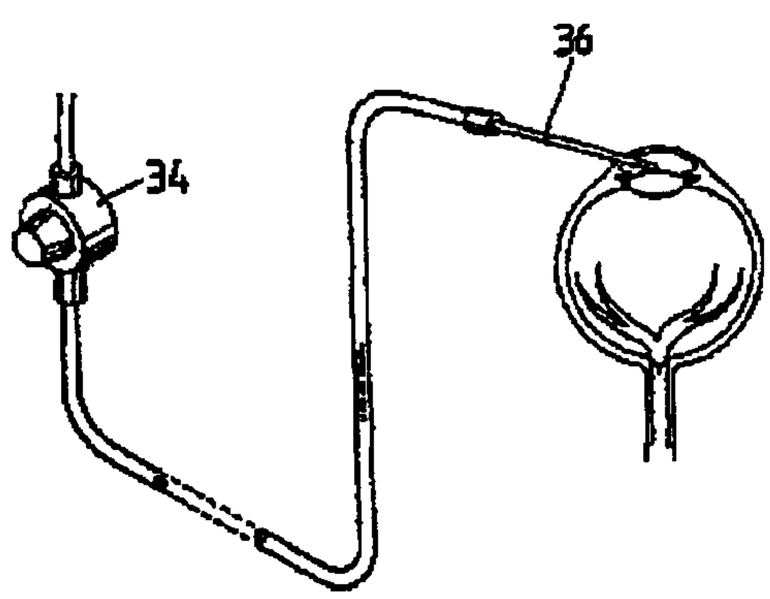

(57) Abstract: An infusion control system (10) having a flexible, collapsible infusion container (26). The container (26) can be compressed between rollers (553) or plate so as to pressurize the container. Such a system allows for rapid pressure response rates without the need of venting devices or air filtering. This may also include an irrigation flow sensor (22). The sensor (22) may be placed in the control console (14) or in the infusion handpiece (12). Irrigation (12) flow measurements provided by the sensor (22) allows the control system (10) to vary irrigation pressure and/or flow, aspiration pressure and/or flow and power supplied to the handpiece (12) more accurately than sensors that monitor aspiration flow.

WO 00/78372 A1

INFUSION CONTROL SYSTEM

Background of the Invention

This invention relates generally to the field of cataract surgery and more particularly to an infusion control system for a phacoemulsification handpiece.

The human eye in its simplest terms functions to provide vision by transmitting light through a clear outer portion called the cornea, and focusing the image by way of the lens onto the retina. The quality of the focused image depends on many factors including the size and shape of the eye, and the transparency of the cornea and lens.

When age or disease causes the lens to become less transparent, vision deteriorates because of the diminished light which can be transmitted to the retina. This deficiency in the lens of the eye is medically known as a cataract. An accepted treatment for this condition is surgical removal of the lens and replacement of the lens function by an artificial intraocular lens (IOL).

In the United States, the majority of cataractous lenses are removed by a surgical technique called phacoemulsification. During this procedure, a thin phacoemulsification cutting tip is inserted into the diseased lens and vibrated ultrasonically. The vibrating cutting tip liquefies or emulsifies the lens so that the lens may be aspirated out of the eye. The diseased lens, once removed, is replaced by an artificial lens.

A typical ultrasonic surgical device suitable for ophthalmic procedures consists of an ultrasonically driven handpiece, an attached cutting tip, and irrigating sleeve and an electronic control console. The handpiece assembly is attached to the control console by an electric cable and flexible tubings. Through the electric cable, the console varies the power level transmitted by the handpiece to the attached cutting tip and the flexible tubings supply irrigation fluid to and draw aspiration fluid from the eye through the handpiece assembly.

The operative part of the handpiece is a centrally located, hollow resonating bar or horn directly attached to a set of piezoelectric crystals. The crystals supply the required ultrasonic vibration needed to drive both the horn and the attached cutting tip during phacoemulsification and are controlled by the console. The crystal/horn assembly is suspended within the hollow body or shell of the handpiece by flexible mountings. The handpiece body terminates in a reduced diameter portion or nosecone at the body's distal

end. The nosecone is externally threaded to accept the irrigation sleeve. Likewise, the horn bore is internally threaded at its distal end to receive the external threads of the cutting tip. The irrigation sleeve also has an internally threaded bore that is screwed onto the external threads of the nosecone. The cutting tip is adjusted so that the tip projects only a predetermined amount past the open end of the irrigating sleeve. Ultrasonic handpieces and cutting tips are more fully described in U.S. Pat. Nos. 3,589,363; 4,223,676; 4,246,902; 4,493,694; 4,515,583; 4,589,415; 4,609,368; 4,869,715; 4,922,902; 4,989,583; 5,154,694 and 5,359,996, the entire contents of which are incorporated herein by reference.

In use, the ends of the cutting tip and irrigating sleeve are inserted into a small incision of predetermined width in the cornea, sclera, or other location. The cutting tip is ultrasonically vibrated along its longitudinal axis within the irrigating sleeve by the crystal-driven ultrasonic horn, thereby emulsifying the selected tissue in situ. The hollow bore of the cutting tip communicates with the bore in the horn that in turn communicates with the aspiration line from the handpiece to the console. A reduced pressure or vacuum source in the console draws or aspirates the emulsified tissue from the eye through the open end of the cutting tip, the cutting tip and horn bores and the aspiration line and into a collection device. The aspiration of emulsified tissue is aided by a saline flushing solution or irrigant that is injected into the surgical site through the small annular gap between the inside surface of the irrigating sleeve and the cutting tip.

The preferred surgical technique is to make the incision into the anterior chamber of the eye as small as possible in order to reduce the risk of induced astigmatism. These small incisions result in very tight wounds that squeeze the irrigating sleeve tightly against the vibrating tip. Friction between the irrigating sleeve and the vibrating tip generates heat, but the risk of the tip overheating and causing a burn to the tissue is reduces by the cooling effect of the aspirated fluid flowing inside the tip. When the tip becomes occluded with tissue, this aspiration flow can be reduced or eliminated, allowing the tip to heat up.

Prior art devices have used sensors that detect large rises in aspiration vacuum, and predict occlusions based on vacuum rise. Based on this sensed occlusion, power to the handpiece may be reduced and/or irrigation and aspiration flows can be increased. See U.S. Patent Nos. 5,591,127, 5,700,240 and 5,766,146 (Barwick, Jr., et al.), the entire

contents of which being incorporated herein by reference. Increased vacuum levels in the aspiration line, however, do not necessarily indicate that the flow of cooling fluid around the tip has been cut off. Even with the tightest incisions, some irrigating fluid will leak out between the wound and the outside of the irrigating sleeve. The wound leakage also provides additional cooling flow to the incision site, and measuring rises in aspiration vacuum alone does not necessarily indicate that a potential for a corneal burn exists. Therefore, power to the handpiece may be interrupted prematurely.

Prior art devices have also used gravity fed methods or pressurized gas sources for controlling surgical infusion pressure and flow. Gravity feed infusion methods, such as those illustrated in FIG. 8, provide a pressure and flow based on the height of a column of liquid. The higher the column, the greater the pressure and flow. The lower the column, the lower the pressure and flow. The surgeon controls the column height by raising or lowering the infusion bottle. Pressurized gas sources, such as those illustrated in FIG. 9, control the infusion pressure by increasing or decreasing the pressure inside the infusion bottle. The bottle is suspended at a constant height and a gas pressure pump is connected to the bottle. See U.S. Patent Nos. 4, 813,927, 4,900,301, 5,032,111 and 5,047,009(Morris, et al.), the entire contents of which being incorporated herein by reference. Gravity feed methods have limitations on pressure response rates due to the requirements of raising and lowering the infusion bottle. Pressurized gas methods improve on the response rates but require cumbersome venting snorkel devices that complicate the surgical setup. Both methods require filtering of air or gas into the bottle to prevent contamination which is added cost and complexity

Therefore, a need continues to exist for an infusion source for a surgical applications that utilizes a better method of infusion pressure and flow.

Brief Summary of the Invention

The present invention improves upon the prior art by providing an infusion system having a flexible, collapsible infusion container. The container can be compressed between rollers or plate so as to pressurize the container. Such a system allows for rapid pressure response rates without the need of venting devices or air filtering. The may also include an irrigation flow sensor. The sensor may be placed in the control console or in

the infusion handpiece. Irrigation flow measurements provided by the sensor allows the control system to vary irrigation pressure and/or flow, aspiration pressure and/or flow and power supplied to the handpiece more accurately than sensors that monitor aspiration flow.

Accordingly, one objective of the present invention is to provide a surgical console control system.

Another objective of the present invention is to provide a surgical console control system having irrigation flow sensing capability.

Another objective of the present invention is to provide a surgical console control system that provides more accurate control of the handpiece operating parameters.

Another objective of the present invention is to provide a surgical console control system that provides more accurate control of the infusion operating parameters.

Another objective of the present invention is to provide a surgical console control system that provides more accurate control of the aspiration operating parameters.

Another objective of the present invention is to provide faster and more accurate control of infusion pressure and flow.

Another objective of the present invention is to provide a method of infusion flow measurement without the need of external devices.

These and other advantages and objectives of the present invention will become apparent from the detailed description and claims that follow.

Brief Description of the Drawings

FIG. 1 is a block diagram of a first embodiment of a control system that can be used with the present invention.

FIG. 2 is a block diagram of a second embodiment of a control system that can be used with the present invention.

FIG. 3 is a block diagram of a third embodiment of a control system that can be used with the present invention showing the flow sensor in the instrument and pressurized infusion control of the infusion source.

FIG. 4 is a block diagram of a fourth embodiment of a control system that can be used with the present invention showing the flow sensor in the handpiece and pressurized infusion control of the infusion source.

FIG. 5 is a block diagram of a fifth embodiment of a control system that can be used with the present invention showing the flow sensor in the instrument and measuring air flow of the pressurized infusion source to calculate infusion fluid flow.

FIG. 6 is a block diagram of a sixth embodiment of a control system that can be used with the present invention showing the pressurized infusion source as a compressed compliant bag and the infusion fluid flow calculated from the rate of infusion source compression.

FIG. 7 is a flow chart illustrating the operation of an infusion flow control mode that can be used with the present invention.

FIG. 8 is an illustration of a prior art gravity fed infusion method.

FIG. 9 is an illustration of a prior art pressurized infusion method.

FIG. 10 is a block diagram of a one embodiment of the compliant container of the present invention being compressed between rollers.

FIG. 11 is a block diagram of another embodiment of the compliant container of the present invention being compressed by a pressure plate.

Detailed Description of the Invention

As seen in FIG. 1, in a first embodiment of the present invention, control system 10 for use in operating handpiece 12 includes control console 14. Control console 14 generally includes control module or CPU 16, aspiration pump 18, handpiece power supply 20, irrigation flow sensor 22 and valve 24. Console 14 may be any commercially available surgical control console such as the ACCURUS® or LEGACY® SERIES TWENTY THOUSAND® surgical systems available from Alcon Laboratories, Inc., Fort Worth, Texas. CPU 16 may be any suitable microprocessor, micro controller, computer or digital logic controller. Pump 18 may be any suitable pump, such as a peristaltic, scroll, diaphragm or venturi pump. Power supply 20 may be any suitable ultrasound driver, such as incorporated in the ACCURUS® or LEGACY® SERIES TWENTY THOUSAND® surgical systems available from Alcon Laboratories, Inc., Fort Worth, Texas. Sensor 22 may be any commercially available flow sensor, such as Models Nos. T101D or T201D available from Transonic Systems, Inc., Ithaca, New York. Valve 24 may be any suitable valve such as a solenoid-activated pinch valve. Infusion source 26 may be any

commercially available irrigation solution.

In use, sensor 22 is connected to handpiece 12 and infusion fluid source 26 through irrigation lines 30, 32 and 34. Sensor 22 measures the flow of irrigation fluid from source 26 to handpiece 12 and supplies this information to CPU 16 through cable 36. The irrigation fluid flow data may be used by CPU 16 to control the operating parameters of console 14 using software commands that are well-known in the art. For example, CPU 16, through cable 38, may open and close valve 24 so as to vary the amount of irrigation fluid reaching handpiece 12 from source 26. CPU 16 may also, through cable 40, vary the output of power supply 20 being sent to handpiece 12 though power cable 42. CPU 16 may also use data supplied by sensor 22 to vary the operation of pump 18, which aspirates fluid from handpiece 12 through line 46 and into collection container 28 through line 48.

As seen in FIG. 2, in a second embodiment of the present invention, control system 110 for use in operating handpiece 112 includes control console 114. Control console 114 generally includes control module or CPU 116, aspiration pump 118, handpiece power supply 120 and valve 124. Flow sensor 122 is contained within handpiece 112.

In use, tip 150 is connected to fluid source 126 through sensor 122 through irrigation lines 130, 132 and 134. Sensor 122 measures the flow of irrigation fluid from source 126 to tip 150 and supplies this information to CPU 116 through cable 136. CPU 116, through cable 138, may open and close valve 124 so as to vary the amount of irrigation fluid reaching tip 150 from source 126. CPU 116 may also, through cable 140, vary the output of power supply 120 being sent to handpiece 112 though power cable 142. CPU 116 may also use data supplied by sensor 122 to vary the operation of pump 118, which aspirates fluid from handpiece 112 through line 146 and into collection container 128 through line 148. CPU 116 may also use data supplied by sensor 122 and the applied output of power supply 120 to provide audible tones to the user.

As seen in FIG. 3, in a third embodiment of the present invention, control system 210 for use in operating handpiece 212 includes control console 214. Control console 214 generally includes control module or CPU 216, aspiration pump 218, handpiece power supply 220, valve 224, pressurizing source 229, and pressure sensor 227. Flow sensor 222 is connected to handpiece 212 and infusion fluid source 226 through irrigation lines 230, 232 and 234. Infusion source 226 may be any commercially available irrigation solution provided in bottles. Pressurizing source 229 pressurizes infusion source 226 through line

252 and is controlled by CPU 216 through cable 250. Pressurizing source 229 may be any commercially available pressure controller, such as incorporated in the ACCURUS® surgical system available from Alcon Laboratories, Inc., Fort Worth, Texas. Pressure sensor 227 measures the pressure of infusion source 226 through lines 254 and is monitored by CPU 216 through cable 256. Pressure sensor 227 may be any suitable commercially available pressure sensor, such as Model MPX5100 available from Motorola, Inc., Phoenix, Arizona.

In use, sensor 222 measures the flow of irrigation fluid from source 226 to handpiece 212 and supplies this information to CPU 216 through cable 236. The irrigation fluid flow data may be used by CPU 216 to control the operating parameters of console 214 using software commands that are well known in the art. For example, CPU 216, through cable 250, may control pressurizing source 229 while reading pressure sensor 227 data through cable 256 so as to vary the pressure and amount of irrigation fluid reaching handpiece 212 from source 226. CPU 216 may also, through cable 240, vary the output of power supply 220 being sent to handpiece 212 through power cable 242. CPU 216 may also use data supplied by sensor 222 to vary the operation of pump 218 through line 244, which aspirates fluid from handpiece 212 through line 246 and into collection container 228 through line 248. CPU 216 may also use data supplied by sensor 222 and the applied output of power supply 220 to provide audible tones to the user.

As seen in FIG. 4, in a fourth embodiment of the present invention, control system 310 for use in operating handpiece 312 includes control console 314. Control console 314 generally includes control module or CPU 316, aspiration pump 318, handpiece power supply 320, valve 324, pressurizing source 329, and pressure sensor 327. Flow sensor 322 is contained within handpiece 312. Infusion source 326 may be any commercially available irrigation solution provided in bottles. Pressurizing source 329 may be any commercially available pressure controller. Pressure sensor 327 may be any suitable commercially available pressure sensor.

In use, sensor 322 measures the flow of irrigation fluid from source 326 to handpiece 312 and supplies this information to CPU 316 through cable 336. The irrigation fluid flow data may be used by CPU 316 to control the operating parameters of console 314 using software commands that are well known in the art. For example, CPU 316, through cable 350, may control pressurizing source 329 while reading pressure sensor 327

data through cable 356 so as to vary the pressure and amount of irrigation fluid reaching handpiece 312 from source 326. CPU 316 may also, through cable 340, vary the output of power supply 320 being sent to handpiece 312 through power cable 342. CPU 316 may also use data supplied by sensor 322 to vary the operation of pump 318 through cable 344, which aspirates fluid from handpiece 312 through line 346 and into collection container 328 through line 348. CPU 316 may also use data supplied by sensor 322 and the applied output of power supply 320 to provide audible tones to the user.

As seen in FIG. 5, in a fifth embodiment of the present invention, control system 410 for use in operating handpiece 412 includes control console 414. Control console 414 generally includes control module or CPU 416, aspiration pump 418, handpiece power supply 420, valve 424, pressurizing source 429, and pressure sensor 527. Airflow sensor 423 is connected to pressurizing source 429 and infusion source 426 through lines 432 and 452. Sensor 423 may be any commercially available flow sensor, such as Model AWM3100V available from Honeywell Micro Switch, Freeport, Illinois. Infusion source 426 may be any commercially available irrigation solution provided in bottles.

In use, sensor 423 measures the flow of air into the infusion source 426 and supplies this information to CPU 416 through cable 436. The airflow data may be used by CPU 416 along with information from pressure sensor 427 for the calculation of infusion flow to the handpiece through line 434. This infusion flow calculation may be used to control the operating parameters of console 414 using software commands that are well known in the art. For example, CPU 416, through cable 450, may control pressurizing source 429 while reading pressure sensor 427 data through cable 456 so as to vary the pressure and amount of irrigation fluid reaching handpiece 412 from source 426. CPU 416 may also, through cable 440, vary the output of power supply 420 being sent to handpiece 412 through power cable 442. CPU 416 may also use this infusion flow calculation to vary the operation of pump 418 through cable 444, which aspirates fluid from handpiece 412 through power cable 442. CPU 416 may also use this infusion flow calculation to vary the operation of pump 418 through cable 444, which aspirates fluid from handpiece 412 through line 446 and into collection container 428 through line 448. CPU 416 may also use this infusion flow calculation and the applied output of power supply 420 to provide audible tones to the user.

As seen in FIG. 6, in a sixth embodiment of the present invention, control system

510 for use in operating handpiece 512 includes control console 514. Control console 514 generally includes control module or CPU 516, aspiration pump 518, handpiece power supply 520, valve 524, pressurizing source 530, and pressure sensor 527. Infusion source 525 may be any commercially available irrigation solution provided in bags or a custom compliant container. Pressurizing source 530 is a compressing device that squeezes infusion source 525 through mechanism 553 in order to pressurize the fluid. The rate of compression of the infusion source is controlled by CPU 516 through cable 550.

In use, CPU 516 calculates the infusion flow to the handpiece through line 534 based on the compression rate of pressurizing source 530 and the pressure data from pressure sensor 527. This infusion flow calculation may be used to control the operating parameters of console 514 using software commands that are well known in the art. For example, CPU 516, through cable 550, may control pressurizing source 530 while reading pressure sensor 527 data through cable 556 so as to vary the pressure and amount of irrigation fluid reaching handpiece 512 from source 525. CPU 516 may also, through cable 540, vary the output of power supply 520 being sent to handpiece 512 through power cable 542. CPU 516 may also use this infusion flow calculation to vary the operation of pump 518 through cable 544, which aspirates fluid from handpiece 512 through line 546 and into collection container 528 through line 548. CPU 516 may also use this infusion flow calculation and the applied out put of power supply 520 to provide audible tones to the user.

As seen in FIG. 10, pressurizing source 530 includes compression roller mechanism 553, infusion container 525, pressure sensor 527 and infusion or irrigation valve 524. Roller mechanism 553 includes compression rollers 554 and rollers driving motor 555. Infusion container 525 may be a compliant bag such as commonly supplied by Charter Medical, Lakewood, New Jersey, for surgical site infusion or a custom container specifically designed for this application. Infusion container 525 may be made from any suitable material that provides container collapse without excessive stretching. Infusion container 525 may be a thin wall bottle with or without corrugated sides (not shown). Pressure sensor 527 may be any commercially available, disposable, pressure sensor such as Model 1290C manufactured by Hewlett Packard or a custom type sensor specifically made for this application. Infusion valve 524 can be any commercially available pinch type valve commonly used in surgical instruments. Compression roller mechanism 553

may contain bi-directional mechanical rollers 554 and suitable fixturing specifically designed to compress compliant container 525 in a controlled and uniform manner such that the rate of compression is proportional to the rate of fluid expulsion.

In use, compliant container 525 is placed in roller mechanism 553 and connected to irrigation line 533. Infusion valve 524 is opened and the roller mechanism 553 moves to compress container 525. The movement of the rollers mechanism 554 reduces the available volume in container 525, which forces the infusion liquid into irrigation line 533. Information from pressure sensor 527 indicates the infusion pressure and roller mechanism 553 is controlled such that a predetermined infusion pressure reading is maintained. The rate of movement of driving motor 555 is proportional to the rate of liquid expulsion and the information may be used by control system 510 for further systematic control.

As seen in FIG. 11, pressurizing source 530' includes infusion container 525', mechanism 553' pressure sensor 527' and valve 524'. Mechanism 553' includes compression actuators 103, upper plate 105, lower plate 107, and plate return springs 106. Compression actuators 103 may be either worm gear or hydraulically driven and designed to compress plate 105 in a controlled and uniform manner such that the rate of compression is proportional to the rate of fluid expulsion out of container 525'. Return springs 106 can be any commercially available springs used to return the plate to a previous position.

In use, compliant container 525' is placed beneath upper plate 105 and lower plate 107 and connected to irrigation line 533. Infusion valve 524' is opened and actuators 103 operated so as to place downward pressure on plate 105 against springs 106. Downward pressure on plate 105 squeezes container 525' between upper plate 105 and lower plate 107, thereby reducing the available volume in container 525', which forces the infusion liquid into irrigation line 533'. Information from pressure sensor 527' indicates the infusion pressure and actuators 103 are controlled such that a predetermined infusion pressure reading is maintained. The rate of movement of actuators 103 is proportional to the rate of liquid expulsion and the information may be used by control system 510 for further systematic control.

As seen in FIG. 7, when the system of the present invention is monitoring infusion flow, the system monitors the current infusion flow and compares the actual flow against a predetermined flow rate. If infusion flow is above the predetermined rate, no action is

taken by the system. If the infusion flow is below the predetermined rate, the system may take a variety of actions, such as changing the power delivered to the ultrasound handpiece, providing a variable tone to the surgeon or changing the aspiration pressure.

This description is given for purposes of illustration and explanation. It will be apparent to those skilled in the relevant art that changes and modifications may be made to the invention described above without departing from its scope or spirit.

We claim:

1. A control system for a surgical system, comprising:
   a. a control console having a control module and an aspiration pump;
   b. a pressurizing source for pressurizing an infusion container; and
   c. an irrigation flow sensor in the control console, the sensor capable of providing irrigation fluid flow information to the control module.

2. The control system of claim 1 wherein the control console further comprises a handpiece power supply.

3. The control system of claim 1 wherein the control module is capable of varying the operation of the aspiration pump based on the irrigation fluid flow information supplied by the sensor.

4. The control system of claim 1 wherein the control module is capable of varying the operation of the aspiration pump and the output of the handpiece power supply based on the irrigation fluid flow information supplied by the sensor.

5. The control system of claim 1 wherein the control module is capable of providing audible tones based on the irrigation fluid flow information supplied by the sensor.

6. The control system of claim 1 wherein the infusion container is flexible and the pressurizing source includes a mechanism to compress the infusion container.

7. The control system of claim 6 wherein the mechanism to compress the infusion container includes a roller mechanism.

8. The control system of claim 6 wherein the mechanism to compress the infusion container includes a compression plate.

9. The control system of claim 1 wherein the control module contains a valve and the

module is capable of varying irrigation fluid flow through the valve based on the irrigation fluid flow information supplied by the sensor.

10. A control system for a surgical system, comprising:

a. a control console having a control module and an aspiration pump;

b. a pressurizing source for pressurizing an infusion container;

c. a surgical handpiece in communication with the control module; and

d. an irrigation flow sensor contained in the handpiece, the sensor capable of providing irrigation fluid flow information to the control module.

11. The control system of claim 10 wherein the control console further comprises a handpiece power supply.

12. The control system of claim 10 wherein the control module is capable of varying the operation of the aspiration pump based on the irrigation fluid flow information supplied by the sensor.

13. The control system of claim 10 wherein the control module is capable of varying the operation of the aspiration pump and the output of the handpiece power supply based on the irrigation fluid flow information supplied by the sensor.

14. The control system of claim 10 wherein the control module is capable of providing audible tones based on the irrigation fluid flow information supplied by the sensor.

15. The control system of claim 10 wherein the control module contains a valve and the module is capable of varying irrigation fluid flow through the valve based on the irrigation fluid flow information supplied by the sensor.

16. The control system of claim 10 wherein the infusion container is flexible and the pressurizing source includes a mechanism to compress the infusion container.

17. The control system of claim 16 wherein the mechanism to compress the infusion

container includes a roller mechanism.

18. The control system of claim 16 wherein the mechanism to compress the infusion container includes a compression plate.

19. A control system for a surgical system, comprising:

a. a control console having a control module and an aspiration pump;

b. a pressurizing source for pressurizing an infusion container; and

c. an irrigation flow sensor capable of providing irrigation fluid flow information to the control module.

20. The control system of claim 19 wherein the control console further comprising a handpiece power supply.

21. The control system of claim 19 wherein the control module is capable of varying the operation of the aspiration pump based on the irrigation fluid flow information supplied by the sensor.

22. The control system of claim 19 wherein the control module is capable of varying the operation of the aspiration pump and the output of the handpiece power supply based on the irrigation fluid flow information supplied by the sensor.

23. The control system of claim 19 wherein the control module is capable of providing audible tones based on the irrigation fluid flow information supplied by the sensor.

24. The control system of claim 19 wherein the console is capable of varying the output of the pressurizing source based on the irrigation fluid flow information supplied by the sensor.

25. The control system of claim 19 wherein the infusion container is flexible and the pressurizing source includes a mechanism to compress the infusion container.

26. The control system of claim 25 wherein the mechanism to compress the infusion container includes a roller mechanism.

27. The control system of claim 25 wherein the mechanism to compress the infusion container includes a compression plate.

28. A surgical system, comprising:
a. a control console having a control module and an aspiration pump;
b. a flexible infusion container; and
c. a mechanism to compress the infusion container.

29. The system of claim 28 wherein the control console further comprises a handpiece power supply.

30. The system of claim 28 further comprising a pressure sensor for sensing the pressure supplied by the aspiration pump.

31. The system of claim 30 wherein the control module is capable of varying the operation of the aspiration pump based on the pressure information supplied by the sensor.

32. The system of claim 30 wherein the control module is capable of providing audible tones based on the pressure information supplied by the sensor.

33. The system of claim 30 wherein the console is capable of varying the output of the pressurizing source based on the pressure information supplied by the sensor.

34. The system of claim 30 wherein the control module is capable of varying the operation of the aspiration pump based on the pressure information supplied by the sensor.

35. The system of claim 28 wherein the mechanism to compress the infusion container includes a roller mechanism.

36. The system of claim 28 wherein the mechanism to compress the infusion container includes a compression plate.

37. The system of claim 28 wherein the compression mechanism is capable of providing infusion flow information.

38. The system of claim 28 further comprising a pressure sensor for sensing the pressure supplied by the compression mechanism.

39. The system of claim 37 wherein the control module is capable of varying the operation of the aspiration pump based on the infusion flow information supplied by the compression mechanism.

40. The system of claim 37 wherein the control module is capable of providing audible tones based on the infusion flow information supplied by the compression mechanism.

41. The system of claim 37 wherein the console is capable of varying the output of the pressurizing source based on the infusion flow information supplied by the compression mechanism.

42. The system of claim 37 wherein the control module is capable of varying the operation of the aspiration pump based on the infusion flow information supplied by the compression mechanism.

43. The system of claim 37 wherein the control console further comprises a handpiece power supply.

44. The system of claim 43 wherein the control module is capable of varying the handpiece power supply based on the infusion flow information supplied by the compression mechanism.

Fig 1

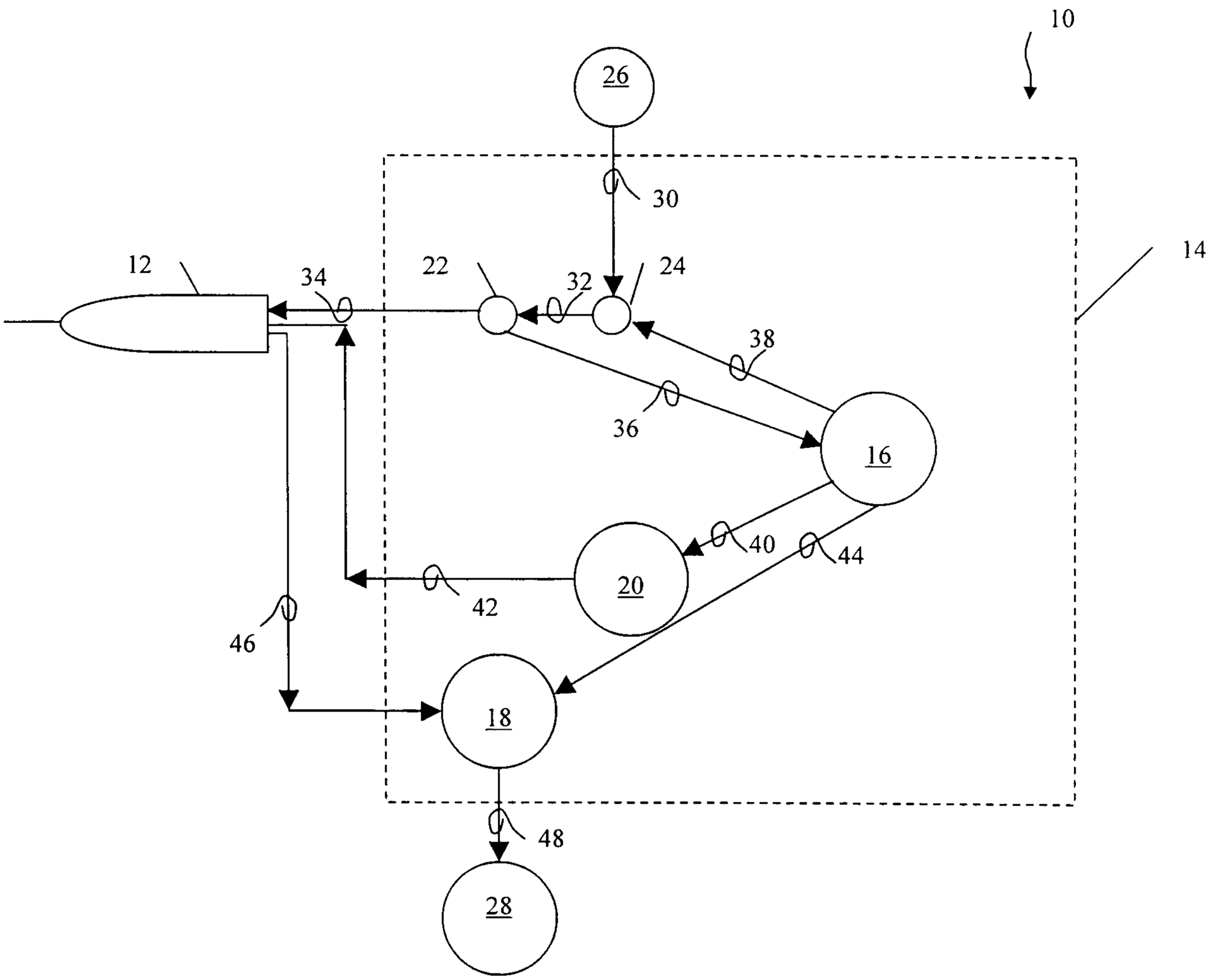

Fig 2

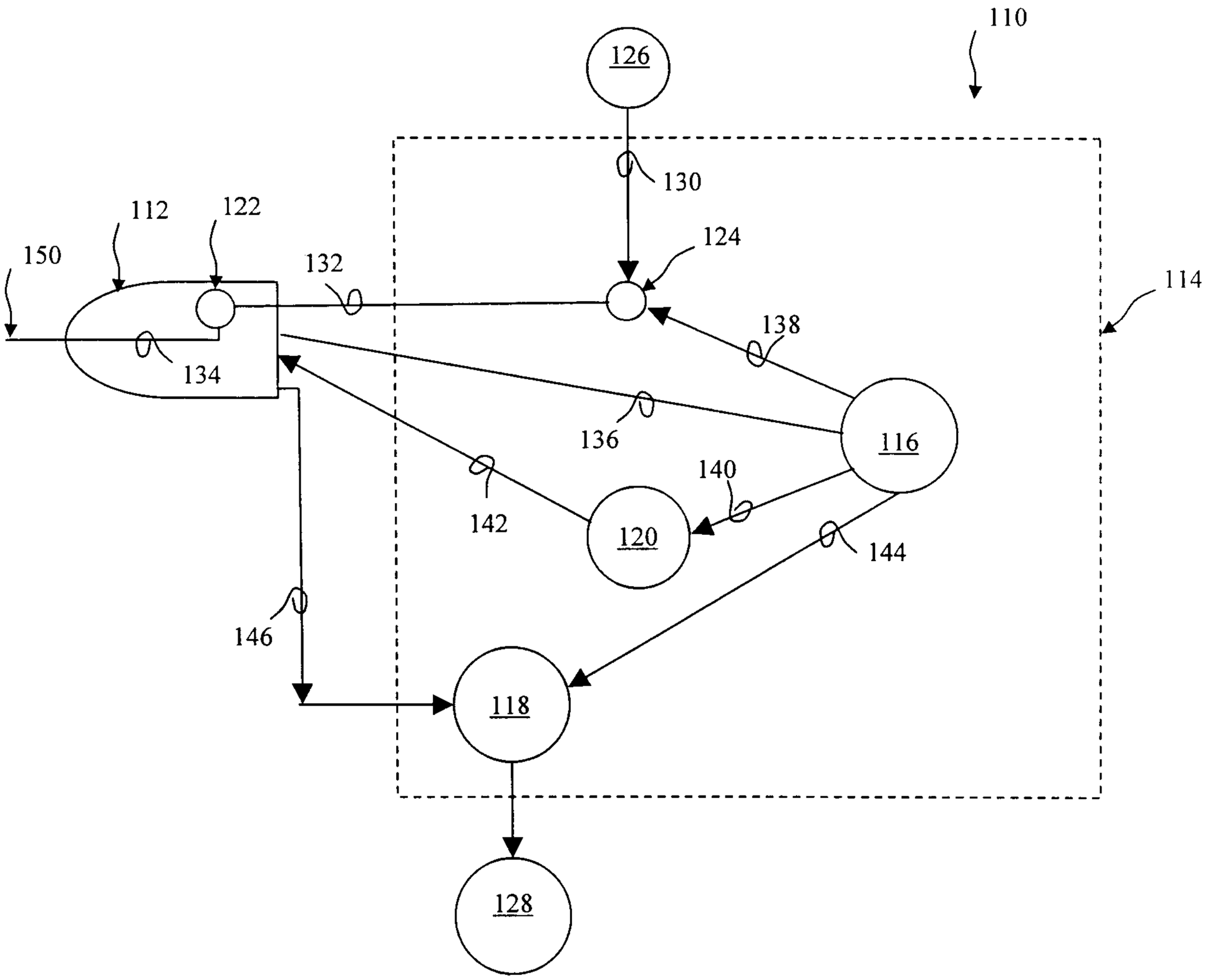
110
126
130
112
122
150
132
124
114
138
134
136
116
140
142
120
144
146
118
128

Fig 3

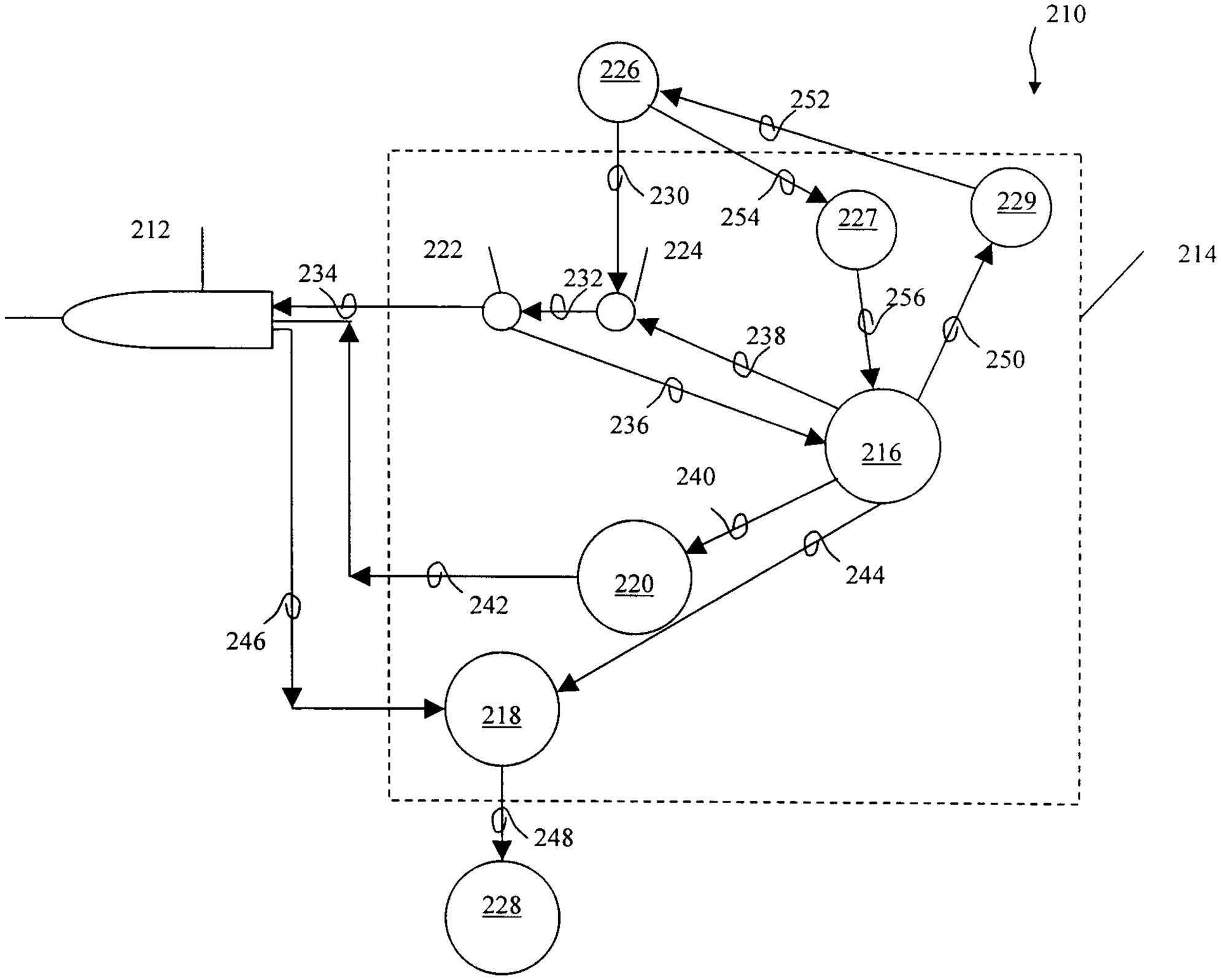
210
226
252
230
254
227
229
212
222
224
214
234
232
256
238
250
236
216
240
220
244
242
246
218
248
228

Fig 4

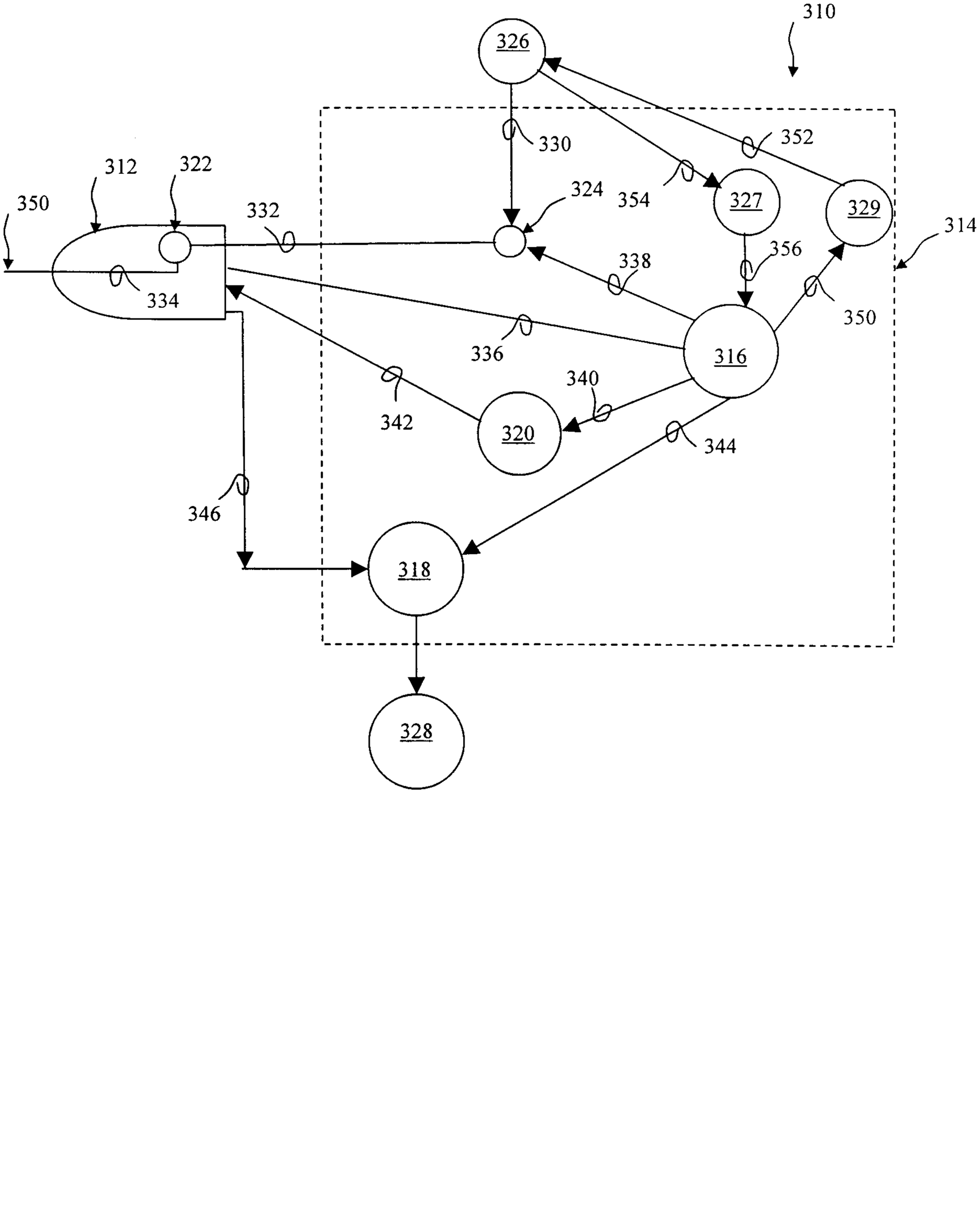
310
326
330
352
312
322
350
332
324
354
327
329
314
334
338
356
336
316
350
340
342
320
344
346
318
328

Fig 5

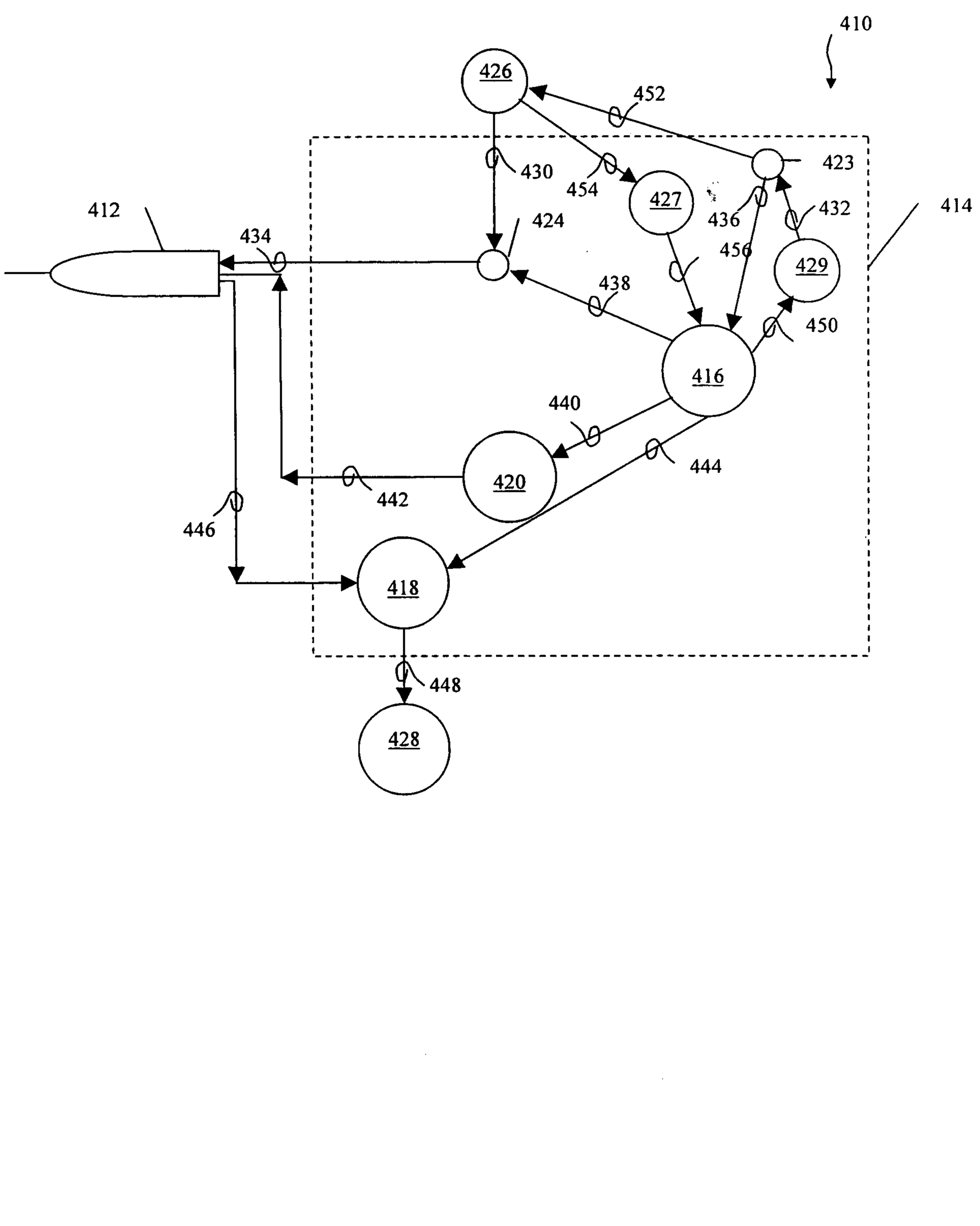
410
426
452
423
430
454
427
436
432
414
412
424
434
456
429
438
450
416
440
444
420
442
446
418
448
428

Fig 6

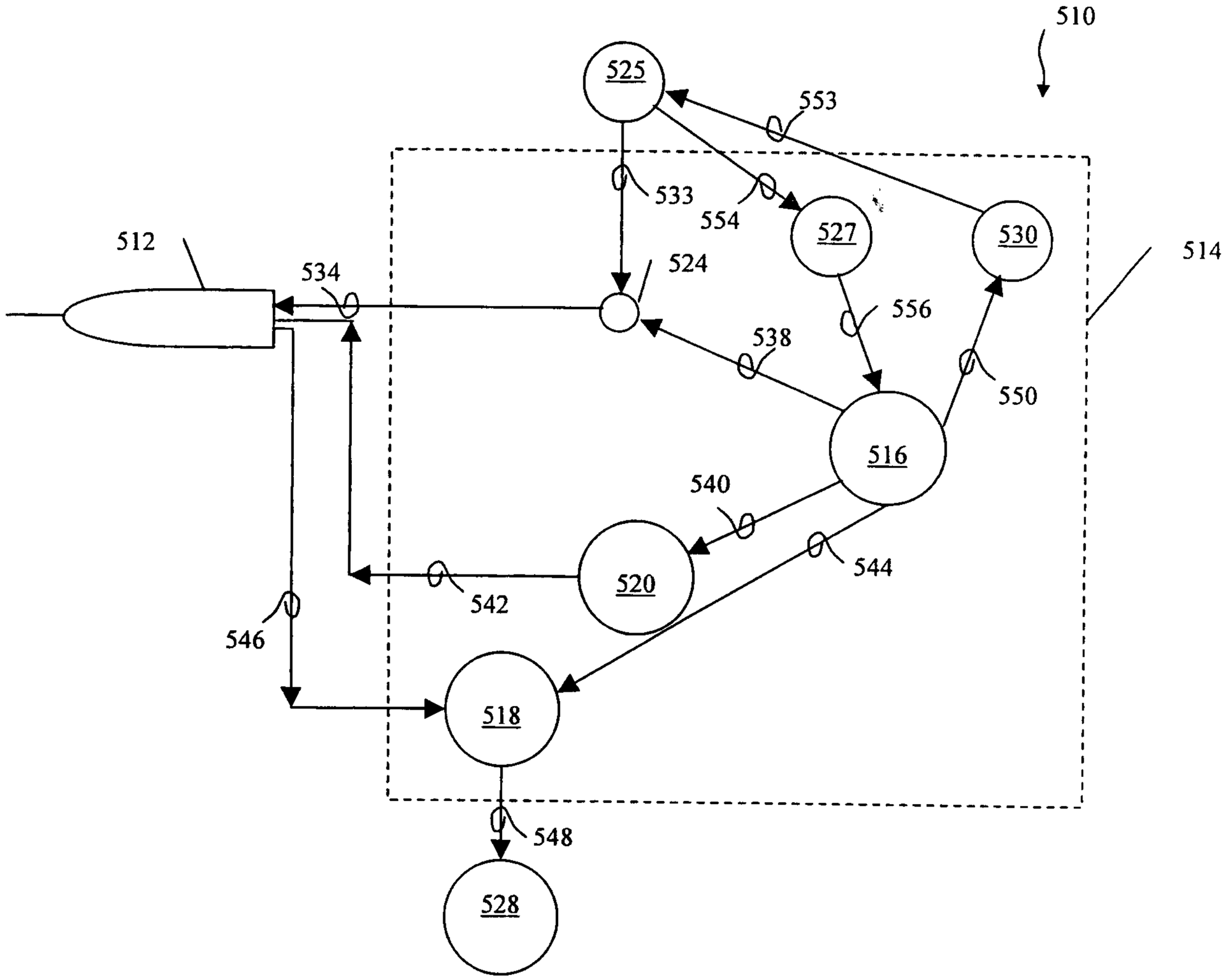
510
525
553
533
554
527
530
514
512
534
524
556
538
550
516
540
544
520
542
546
518
548
528

Fig 7

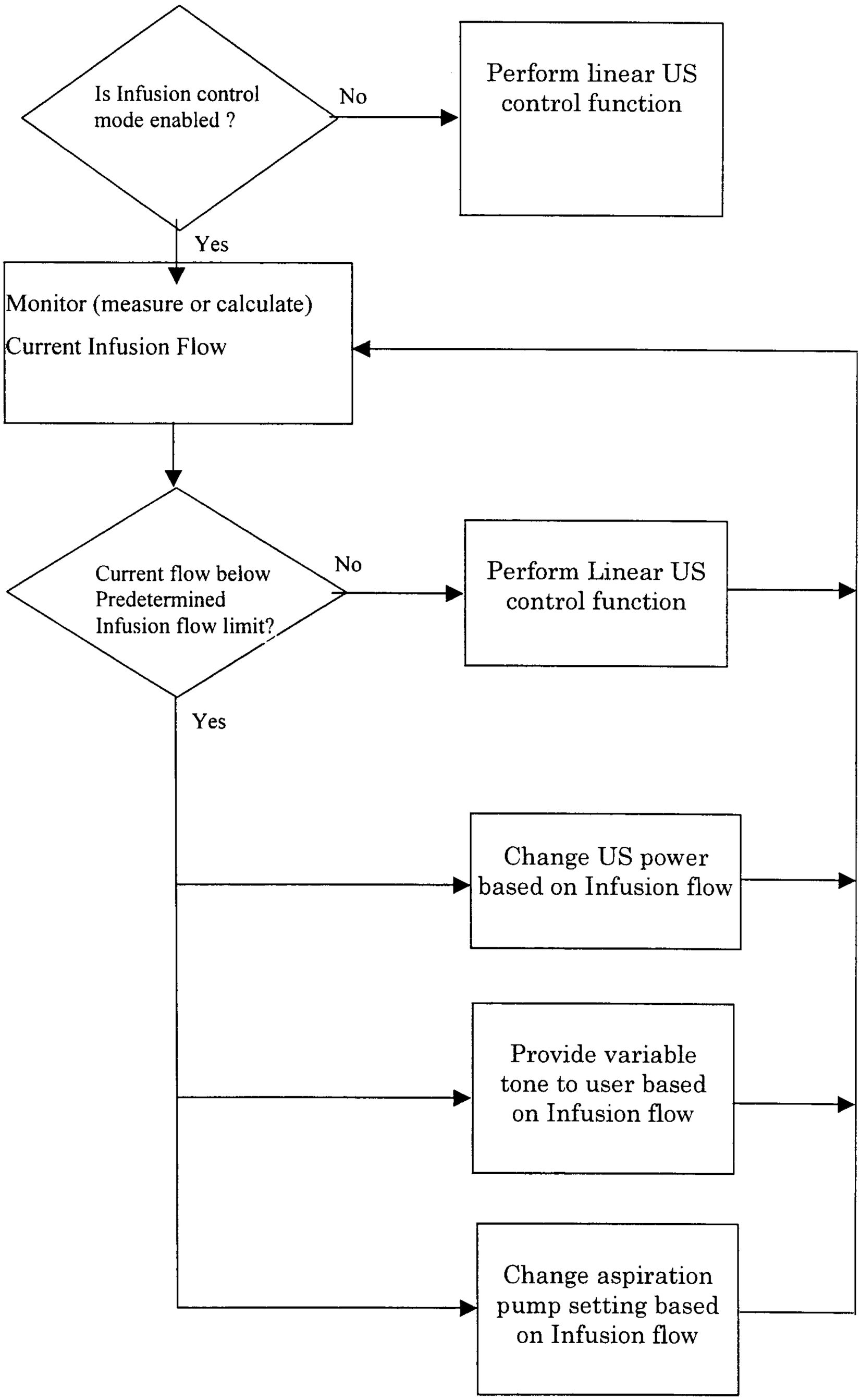
Is Infusion control mode enabled ?
No
Perform linear US control function
Yes
Monitor (measure or calculate) Current Infusion Flow
Current flow below Predetermined Infusion flow limit?
No
Perform Linear US control function
Yes
Change US power based on Infusion flow
Provide variable tone to user based on Infusion flow
Change aspiration pump setting based on Infusion flow

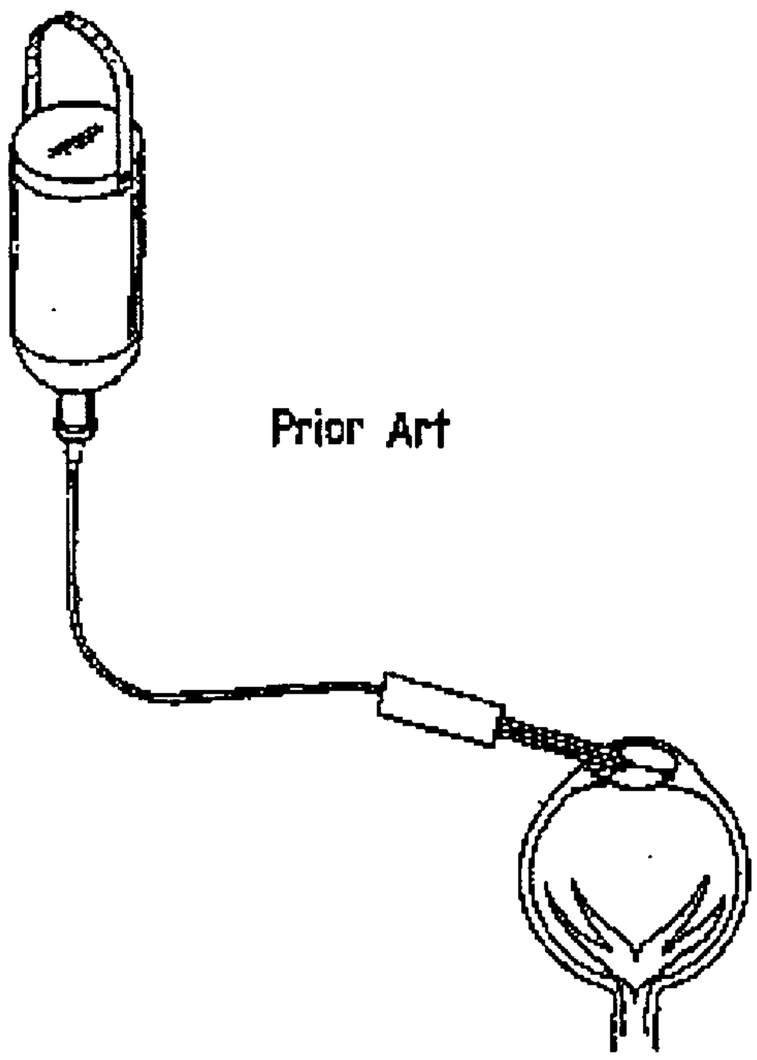

Fig 9

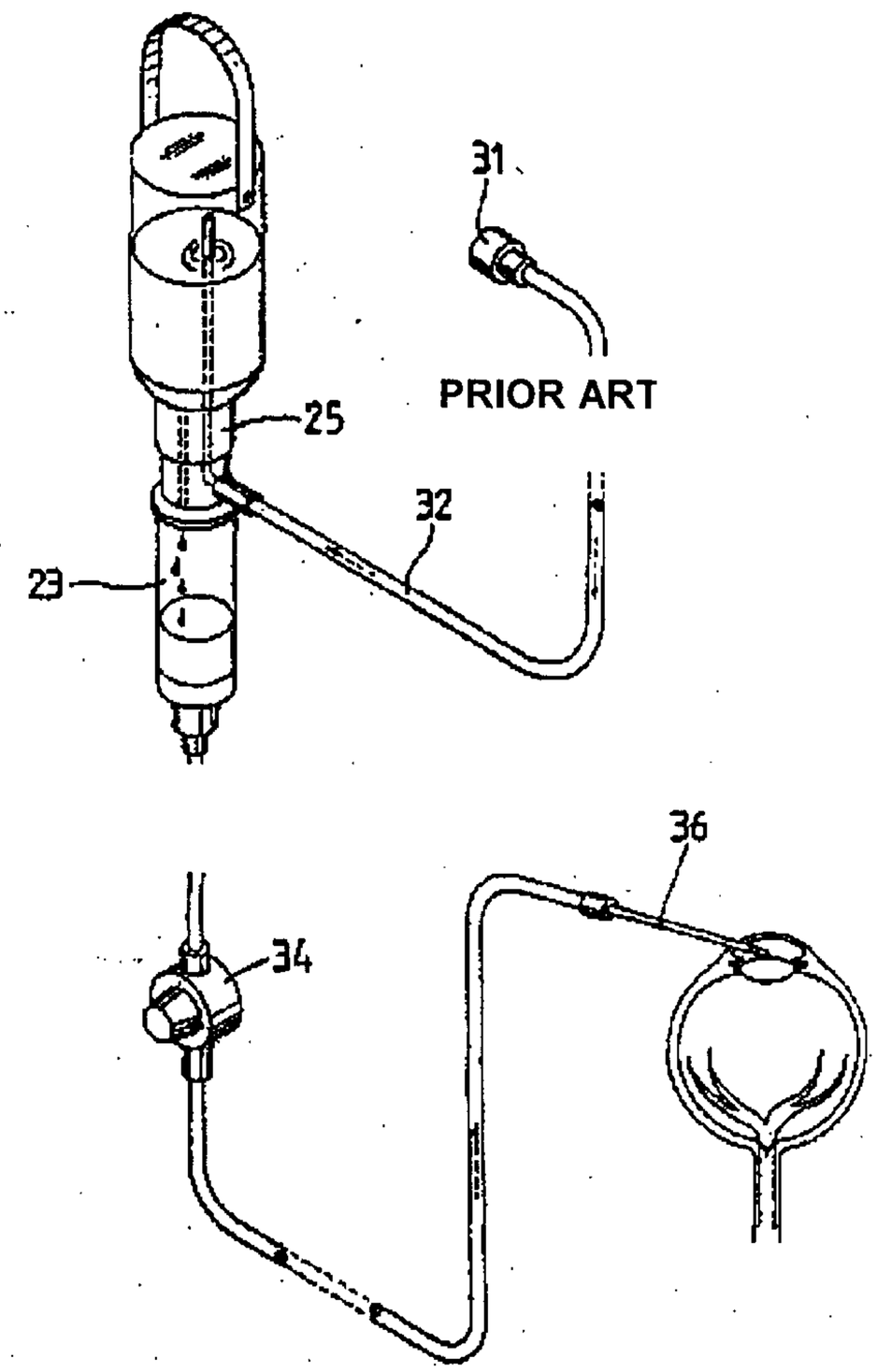

Fig 10

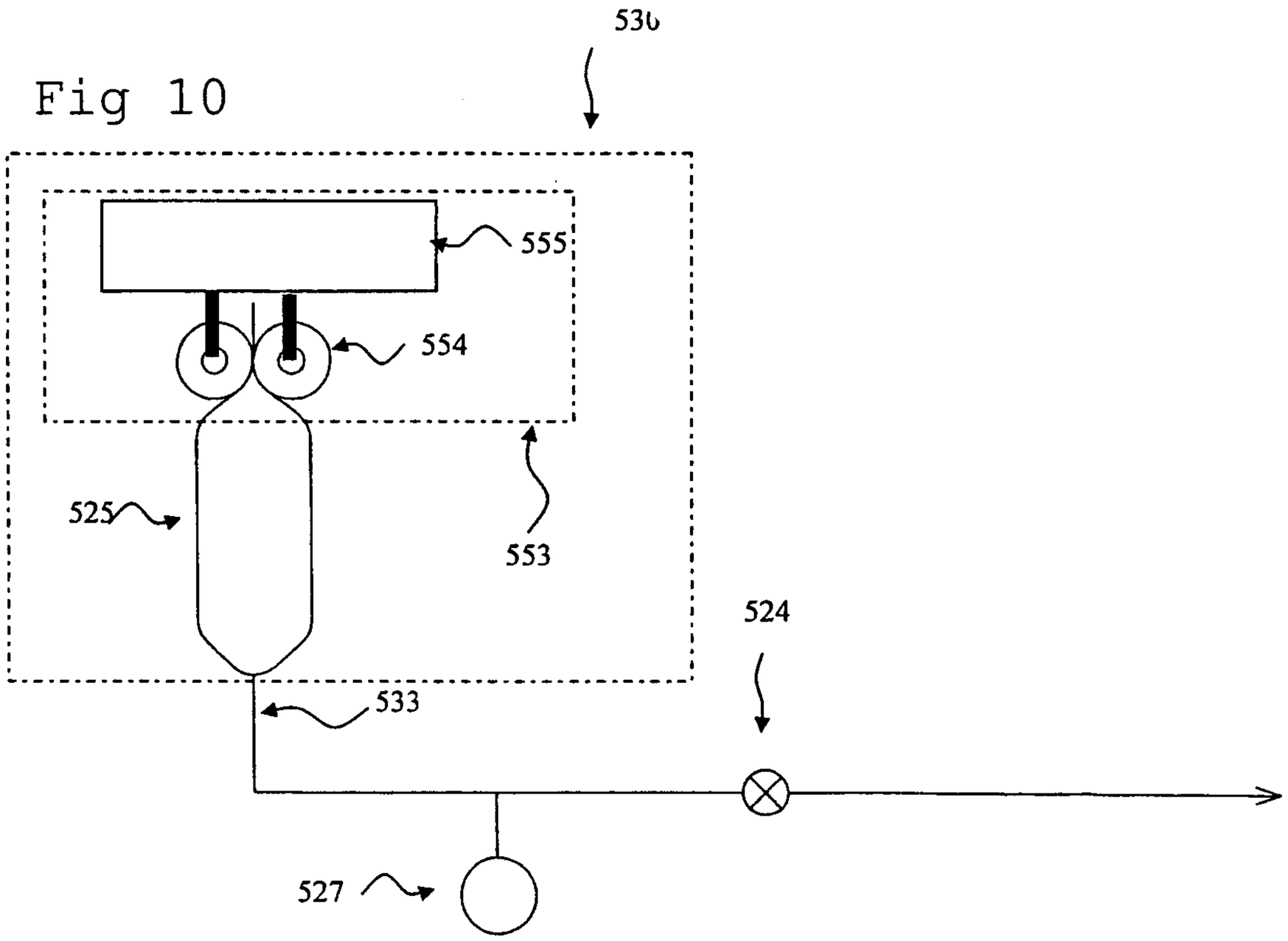
530
555
554
525
553
524
533
527

Fig 11

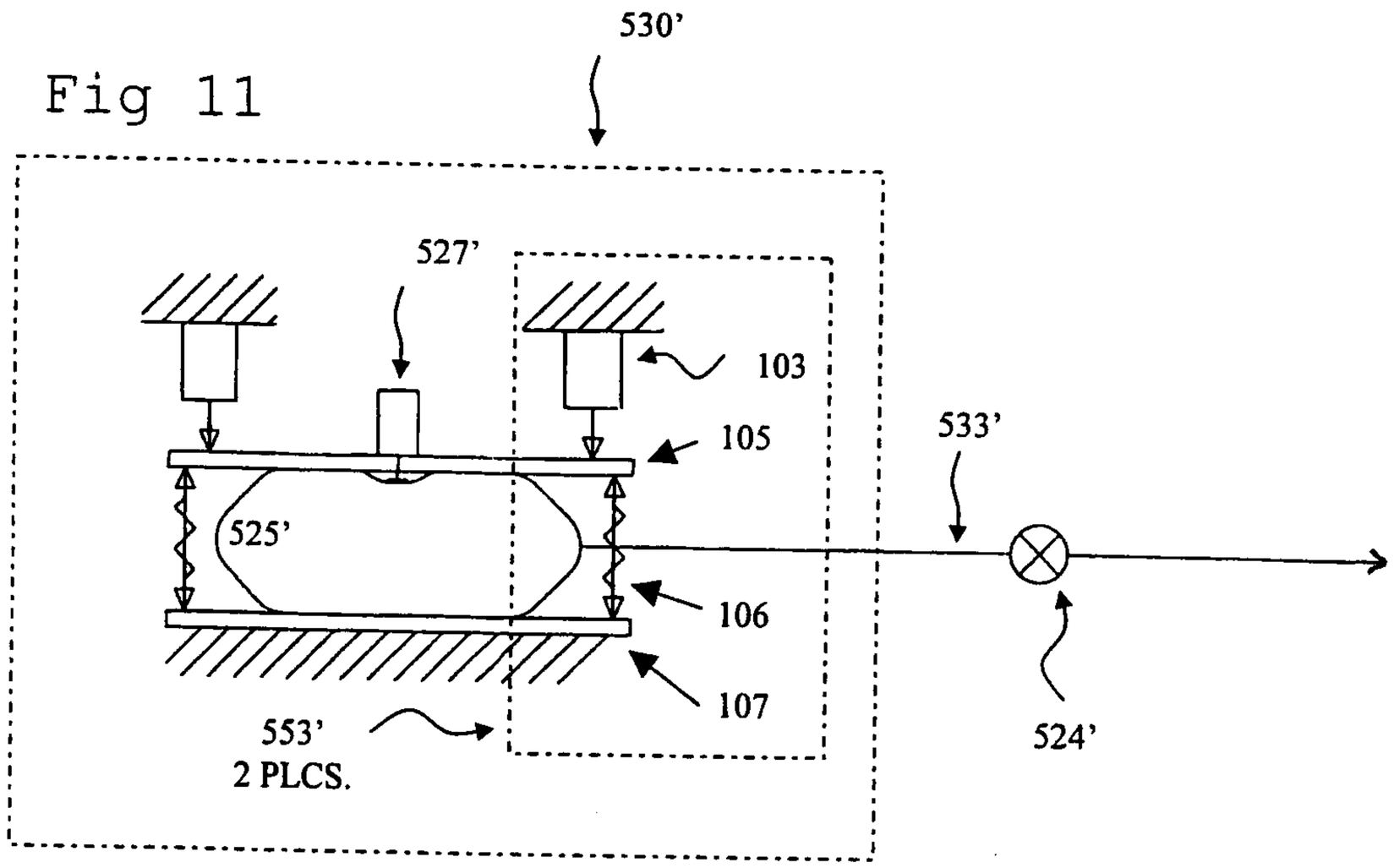
530'
527'
103
105
533'
525'
106
107
553'
2 PLCS.
524'

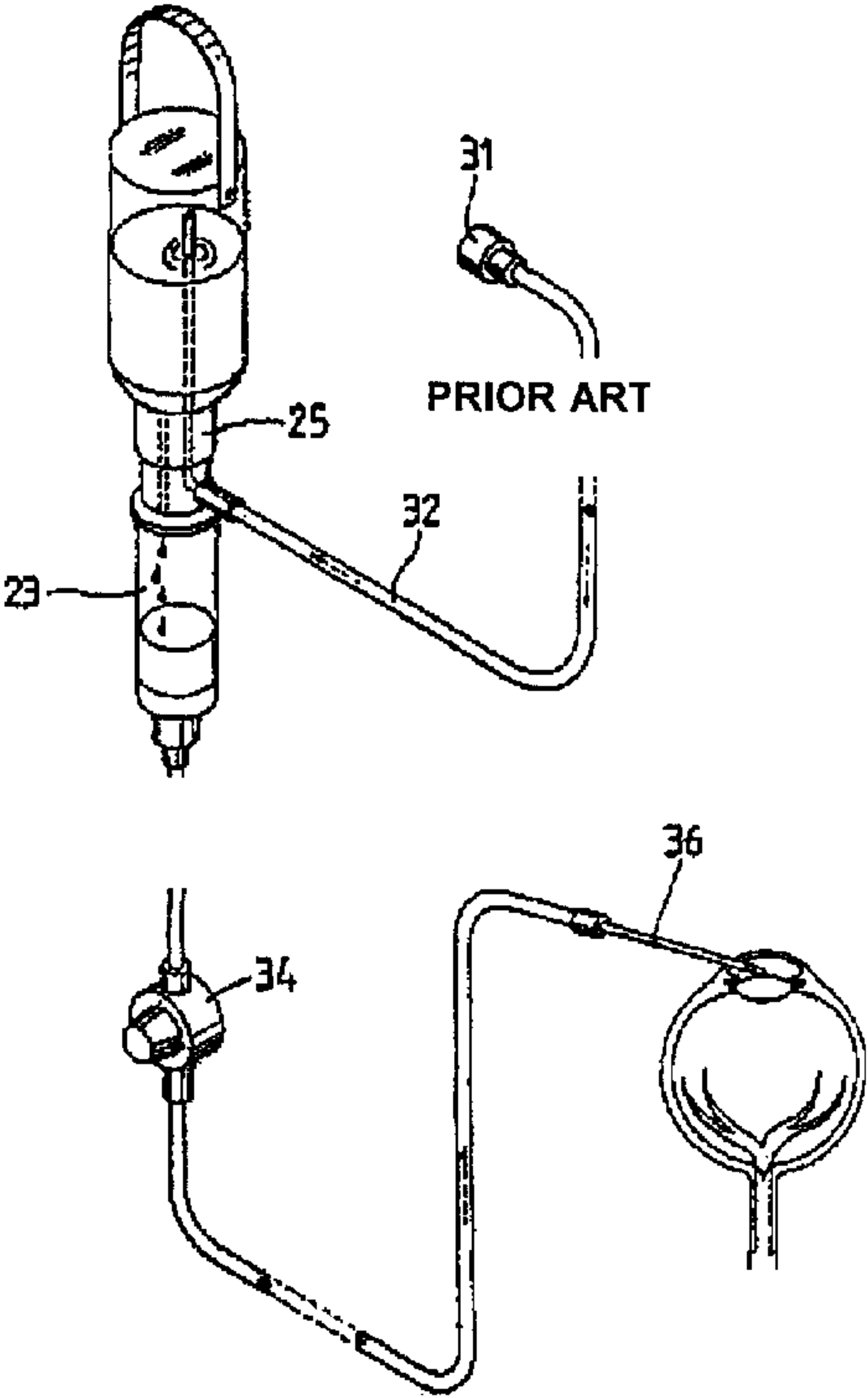
31
PRIOR ART
25
32
23
36
34