T. W. BRODERICK.

AIR SAFETY VALVE.

APPLICATION FILED APR. 28, 1917.

1,288,821. Patented Dec. 24, 1918.

Fig. 2

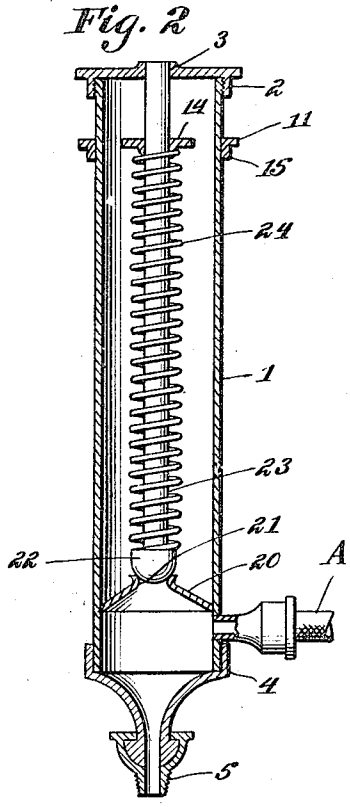

Fig. 1

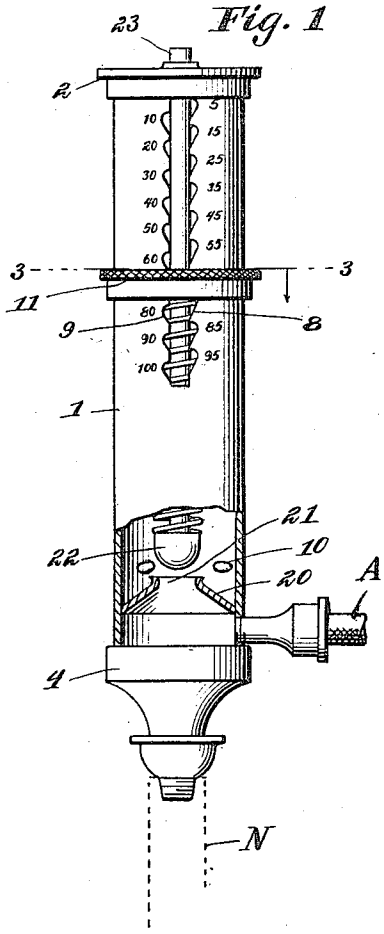

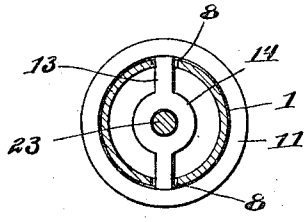

Fig. 3

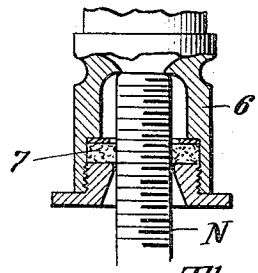

Fig. 4

WITNESSES

C. F. Rudolph

N. L. Collamer

INVENTOR

Thomas W. Broderick,

BY Victor J. Evans

ATTORNEY

THE NORRIS PETERS CO., PHOTO-LITHO., WASHINGTON, D. C.

UNITED STATES PATENT OFFICE.

THOMAS WILLIAM BRODERICK, OF SALAMANCA, NEW YORK.

AIR SAFETY-VALVE.

1,288,821. Specification of Letters Patent. Patented Dec. 24, 1918.

Application filed April 28, 1917. Serial No. 165,224.

To all whom it may concern:

Be it known that I, THOMAS W. BRODERICK, a citizen of the United States, residing at Salamanca, in the county of Cattaraugus and State of New York, have invented new and useful Improvements in Air Safety-Valves, of which the following is a specification.

This invention relates to measuring instruments, and more especially to pressure gages having a piston; and the object of the same is to produce an improved gage of this type wherein the air will be permitted to pass therethrough until it reaches a certain pressure, and then it will be permitted automatically to escape.

The invention is carried out by the specific construction hereinafter more fully described and claimed and as shown in the drawings wherein:—

Figure 1 is a front elevation of this device complete, partly broken away so as to show the valve open.

Fig. 2 is a central vertical section of the device with the valve closed.

Fig. 3 is a plan view of the adjusting ring.

Fig. 4 is a vertical section of a slight modification.

In the drawings the letter N designates the nipple of an automobile tire, and A is the airline or hose leading from a pump or other source of compressed air supply. The purpose of the present invention is to connect the airline with the nipple in such manner that air may be admitted to the pneumatic tube of a tire so as to inflate the tube to a certain extent, when the admission of air is automatically cut off, and this is brought about by the construction forming the subject matter of the present invention.

The numeral 1 designates an upright casing preferably cylindrical, and 2 is its cap which may be screwed in place and is provided with a central guide opening 3. The lower end of the casing may have a cap 4 of the shape best shown in Fig. 2, with a nipple 5 intended to screw into the tire nipple N; or it may have a bell mouth 6 with internal packing 7 as best seen in Fig. 4 so that the nipple may be passed into the same to make an air-tight connection without screwing the nipple 5 into position. Any suitable form of coupling which will answer may be used, but I give these two illustrations to show that I am not limited in this particular. The wall of the casing is provided with longitudinal and oppositely disposed slots 8, each of which is provided in opposite edges with alternated notches 9 adjacent which are numerals for a purpose yet to appear, and near the lower end of the casing its wall is also pierced with openings or outlet holes 10. The airline A communicates with the casing just above the lower cap 4 as shown.

Loosely inclosing and slidably mounted upon the body of the casing 1 is an adjusting collar 11, and across the interior is a cross-bar 13 whose center is formed into a ring 14 as best seen in Fig. 3. This collar may be moved up and down on the casing, and after reaching the proper position, it is turned to one side or the other and the bar will engage the appropriate notches to hold it in this position. The collar may have a small flange as indicated at 15 in Fig. 2, so that to an extent it becomes cylindrical and in its movements is guided easily and reliably along the cylindrical casing without binding by being canted slightly thereon.

Across the interior of the casing above the air inlet and beneath the outlet openings 10 is a partition 20 carrying at its center a valve seat 21, and mounted on the latter is a valve 22 which is fastened to the lower end of a stem 23 extending upwardly and passing loosely through the ring 14 and thence farther up and through the guide opening 3 in the upper cap 2. Surrounding said stem is a coiled expansive spring 24 whose upper end underlies the ring 14 of the cross-bar 13 and whose lower end bears on the valve 22, and the normal tendency of this spring is of course to close the valve upon its seat 21 as best seen in Fig. 2. The force applied by the spring is obviously increased by moving the adjusting collar downward, and therefore the numerals alongside the notches 9 will increase step by step in a downward direction as seen in Fig. 1. Without further illustration it is obvious that the numerals herein shown at the left side of the slot 8, must also be at the corresponding left side of the opposite slot not illustrated. I prefer to make the notches in both edges of the slot and dispose them in staggered relation to each other, but this is not essential.

The operation of this device when pumping up an automobile tire will now be as follows: Whatever the form of coupling employed, the nipple N is connected with the

lower cap 4, after which the collar 11 is adjusted to the pressure it is desired the air shall have within the tube, and turned so that its bar 13 engages the appropriate notches 9. Air is now admitted along the airline A beneath the partition 20 and the valve 22, which latter we may assume is held closed by a pressure which is the equivalent of seventy pounds per square inch. The air can not pass the closed valve, and therefore it flows through the coupling and nipple and into the tire. Eventually the latter becomes filled, but when the pressure beneath the partition reaches seventy pounds the valve 22 rises from its seat 21 and compresses the spring 24 slightly, and the result is that further air admitted along the airline A flows through the valve seat and escapes out the openings 10 rather than passing into the tire. Thus the latter can not be inflated to a point beyond that desired, which of course is where the collar 11 is set in the first place. The use of a gage of this kind avoids the present necessity of pumping the tire to a certain extent, then removing the pump and applying a gage and testing the pressure, and if it be insufficient, removing the gage and reapplying the pump and continuing the pumping action. With this gage inserted between the pump and the nipple, all the operator has to do is to properly set the adjusting ring in the first place, and then let in the air. Assuming that the air flows from a tank where it is under considerable pressure, and when its valve is opened the air line admits the air with a rush: the moment the pressure rises to the point of limit, the valve opens and the excess of pressure escapes rather than passing into the tire, which might be burst by an over-charge as will be clear. While I have described this use of my invention, I reserve the right to employ it in any way that may be possible. Details other than as herein given are unimportant.

What is claimed as new is:

1. A device of the class described, comprising a casing, a partition therein having a valve seat thereon, an air inlet and outlet below said partition, a stem within the casing, a valve on the end thereof engaging with the valve seat, a cross bar within the casing having a central opening engaging the stem, said casing having slots therein through which the ends of the cross bar extend, a collar engaging with the exterior of the casing and connected with the said ends, a spring on the stem having its ends engaging with the valve and said cross bar and notches formed in the walls of the slot with indicating marks opposite said notches.

2. A device of the class described, comprising a casing, a partition therein having a valve seat thereon, an air inlet and outlet below said partition, a stem within the casing, a valve on the end thereof engaging with the valve seat, a cross bar within the casing having a central opening engaging the stem, said casing having slots therein through which the ends of the cross bar extend, a collar engaging with the exterior of the casing and connected with the said ends, a spring on the stem having its ends engaging with the valve and said cross bar, and means for holding the collar in adjusted position.

In testimony whereof I affix my signature.

THOMAS WILLIAM BRODERICK.

Copies of this patent may be obtained for five cents each, by addressing the "Commissioner of Patents, Washington, D. C."