(12) INTERNATIONAL APPLICATION PUBLISHED UNDER THE PATENT COOPERATION TREATY (PCT)

(19) World Intellectual Property Organization
International Bureau

(43) International Publication Date
19 December 2013 (19.12.2013)

WIPO | PCT

(10) International Publication Number
WO 2013/188865 A1

(51) International Patent Classification:
B02C 18/00 (2006.01)

(21) International Application Number:
PCT/US2013/046054

(22) International Filing Date:
16 June 2013 (16.06.2013)

(25) Filing Language: English

(26) Publication Language: English

(30) Priority Data:
61/660,691 16 June 2012 (16.06.2012) US

(72) Inventor; and
(71) Applicant : **MOREY, Michael, Boyd** [US/US]; 1087 Bundy, Weidman, MI 48893 (US).

(74) Agent: **PAPARELLA, Joseph, A.**; Paparella & Associates, PC, 3878 Cascade Road Se, Grand Rapids, MI 49546-2146 (US).

(81) Designated States *(unless otherwise indicated, for every kind of national protection available)*: AE, AG, AL, AM, AO, AT, AU, AZ, BA, BB, BG, BH, BN, BR, BW, BY, BZ, CA, CH, CL, CN, CO, CR, CU, CZ, DE, DK, DM, DO, DZ, EC, EE, EG, ES, FI, GB, GD, GE, GH, GM, GT, HN, HR, HU, ID, IL, IN, IS, JP, KE, KG, KN, KP, KR, KZ, LA, LC, LK, LR, LS, LT, LU, LY, MA, MD, ME, MG, MK, MN, MW, MX, MY, MZ, NA, NG, NI, NO, NZ, OM, PA, PE, PG, PH, PL, PT, QA, RO, RS, RU, RW, SC, SD, SE, SG, SK, SL, SM, ST, SV, SY, TH, TJ, TM, TN, TR, TT, TZ, UA, UG, US, UZ, VC, VN, ZA, ZM, ZW.

(84) Designated States *(unless otherwise indicated, for every kind of regional protection available)*: ARIPO (BW, GH, GM, KE, LR, LS, MW, MZ, NA, RW, SD, SL, SZ, TZ, UG, ZM, ZW), Eurasian (AM, AZ, BY, KG, KZ, RU, TJ, TM), European (AL, AT, BE, BG, CH, CY, CZ, DE, DK, EE, ES, FI, FR, GB, GR, HR, HU, IE, IS, IT, LT, LU, LV, MC, MK, MT, NL, NO, PL, PT, RO, RS, SE, SI, SK, SM, TR), OAPI (BF, BJ, CF, CG, CI, CM, GA, GN, GQ, GW, KM, ML, MR, NE, SN, TD, TG).

Published:

— *with international search report (Art. 21(3))*

— *before the expiration of the time limit for amending the claims and to be republished in the event of receipt of amendments (Rule 48.2(h))*

(54) Title: DISCHARGE FEED SYSTEM FOR A WASTE PROCESSING MACHINE AND METHODS OF REDUCTION

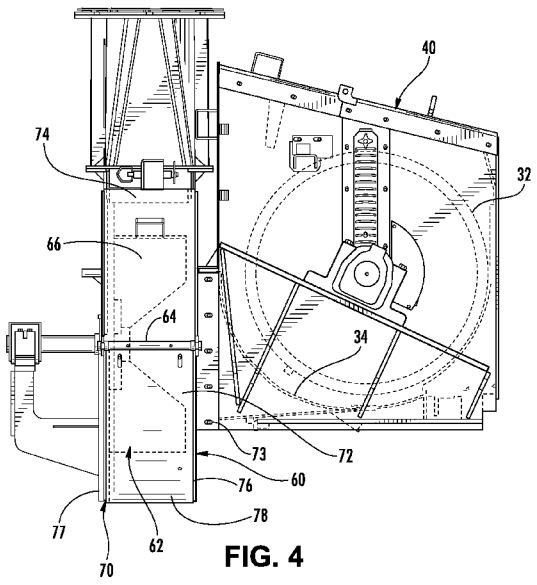

FIG. 4

(57) Abstract: A powered discharge system for a waste processing machine comprising an infeed system, a powered feed system, and a powered cutting system, wherein the powered discharge system comprises an impeller rotatably mounted to a shaft and is adapted to be rotated via an external power source. A waste processing machine for reducing wood waste comprises a secondary discharge system to increase flow of material and uniformity through the waste processing machine.

WO 2013/188865 A1

DISCHARGE FEED SYSTEM FOR A WASTE PROCESSING MACHINE AND METHODS OF REDUCTION

CROSS REFERENCE TO RELATED APPLICATIONS

[0001] This application claims the benefit of the filing date of U.S. provisional application serial No. 61/660,691entitled "DISCHARGE FEED SYSTEM FOR A WASTE PROCESSING MACHINE" which was filed on June 16, 2012, and which is incorporated herein by reference in its entirety.

BACKGROUND OF THE INVENTION

[0002] The present invention relates to waste processing systems, and more specifically to discharge feed systems, devices, and methods for a waste processing system.

[0003] A variety of machines have been developed to recycle, reduce, or otherwise process wood and brush products. Included therein are machines that chip, cut, grind, or otherwise reduce waste (e.g., wood) products including, generally, chippers (disk and drum types), hammer mills, hogs, shredders, grinders, and forestry mowers.

[0004] These waste processing systems typically include an infeed system and a waste reducing or cutting system, wherein the infeed system is used for directing the waste material to the waste reducing system, the waste reducing system being used for reducing the waste material. These waste processing systems also include a discharge system for removing and directing the reduced material.

[0005] These waste processing systems include large, industrial conveyer fed waste processing machines which are capable of quickly reducing bulky (e.g., large size) wood products, as well as doing so in high volume applications. For example, conveyor-fed systems may be used to reduce large tree stumps and trunks, as well as branches, brush, and other bulk wood products. These known systems generally include: an infeed assembly comprising, for example only, a conveyer infeed system; a feed wheel assembly comprising, for example only, a pair of feed-wheels; a cutting assembly comprising, for example only, a drum assembly further comprising reducing members; and a discharge system or assembly comprising, for example only, a conveyer discharge system.

[0006] Examples of such waste processing machines are disclosed in: U.S. Pat. No. 6,047,912, issued Apr. 11, 2000, entitled “Break-Away Processing Tool For A Waste Processing Machine”; U.S.

Pat. Nos.: 5,863,003 and 6,299,082; issued Jan. 26, 1999 and Oct. 9, 2001, respectively; all to Smith; and entitled "Waste Processing Machine"; U.S. Pat. No. 6,059,210 issued May 9, 2000 to Smith, entitled "Rotor Assembly For A Waste Processing Machine"; U.S. Pat. No. 6,517,020, issued Feb. 11, 2003 to Smith, entitled "Replaceable Raker Assembly For Processing Tool Of Waste Processing Machine"; U.S. Pat. No. 6,299,082, issued Oct. 9, 2001 to Smith, entitled "Waste Processing Machine"; U.S. Pat. Nos.: 6,845,931, 7,121,485, 7,384,011, and 7,726,594; issued Jan. 25, 2005, Oct. 17, 2006, Jun. 10, 2008, and Jun. 1, 2010, respectively; all to Smith; and entitled "Multi-Functional Tool Assembly For Processing Tool of Waste Processing Machine"; and U.S. Pat. No. 7,163,166, issued Jan. 16, 2007 to Smith, entitled "Rotatable Assembly For Machines", all of which are incorporated herein by reference in their entirety.

[0007] These waste processing systems also include wood chippers, which may comprise either hand-fed or powered-fed wood chippers which are used to reduce trees, branches, brush, and other bulk wood products into smaller wood chips. For example, a typical wood chipper may include an infeed system (e.g., comprising an infeed chute); a feed system (e.g., comprising one or more feed-wheels which may be adapted for controlling the feed rate of wood products); a reducing or chipping system (e.g., comprising a disc or drum); a power or drive system (e.g., an engine for operative connection with the feed and reducing systems); and a discharge system for allowing the wood chips to exit the wood chipper, as well as for generally directing them during such discharge (e.g., comprising a chute).

[0008] More particularly, the infeed system typically comprises an infeed chute which is generally a funnel-type conduit provided with a wide opening which tapers toward the feed system in order to converge the bulk wood/waste products toward the reducing system and, through the action of the feed system, the bulk wood products are brought into contact with the reducing system which grinds, flails, cuts, or otherwise reduces the wood and waste products into smaller pieces (e.g., wood chips). The smaller pieces are then propelled out of the discharge chute.

[0009] Typically, the feed system comprises a feed-wheel system or assembly which may include, for example: a lower feed wheel operatively connected to a housing (e.g., a stationary lower feed-wheel connected to a lower housing); and an upper feed wheel connected to a housing (e.g., a movable upper feed-wheel connected to an upper housing and movable relative to the lower housing, thereby allowing the distance between the feed-wheels to vary while simultaneously remaining in contact with the wood products, for feeding) which may also be adapted for

controlling the feed rate of wood products (e.g., by controlling or varying the speed of the one or more feed-wheels).

[0010] The reducing system generally includes a rotor, and typically comprises either a disc-style or a drum-style rotatable cutting or reducing head, which then further comprises a plurality of knives, blades or the like which act to cut, chip or otherwise reduce the wood into wood chips.

[0011] Such wood chippers also include a power or drive system for powering the various systems. For example, the drive system may comprise an internal combustion engine which is operatively connected to and powers the various systems directly, or via a mechanical, hydraulic, and electrical systems and connections. For example, hydraulic systems comprising hydraulic pumps which drive hydraulic motors (e.g., to rotate the feed wheels) are routinely used; as well as are systems of belts and pulleys (e.g., to rotate the reducing head).

[0012] Such wood chippers yet further include, and for illustrative purposes only, discharge systems which direct the reduced wood and waste material, generally speaking, as desired and to a desired location. Such discharge systems typically comprise either discharge chutes or conveyors, which may be varied or positionable in order to direct the discharge stream to a desired location.

[0013] By way of further illustration, such a wood chipper is disclosed in U.S. Patent No. 5,988,539, issued Nov. 23, 1999 to Morey, and entitled "Wood Chipper With Infeed Chute Safety Device" which is incorporated herein by reference in its entirety. In these known systems, the wood chipper generally includes an infeed assembly, feed wheel assembly, and a cutting assembly having a rotatable disc or drum with at least one knife or blade for chipping the wood entering the wood chipper and reducing it to wood chips. The chipper also includes a discharge chute for allowing the wood chips to exit the wood chipper, as well as for generally directing them during discharge.

[0014] Other examples of such wood chippers are disclosed in U.S. Pat. Nos.: 6,032,707, issued Mar. 7, 2000 to Morey et al., entitled "Drum Assembly For A Wood Chipper"; 6,036,125, issued Mar. 14, 2000 to Morey et al., entitled "Wood Chipper"; 5,988,539, issued Nov. 23, 1999 to Morey, entitled "Wood Chipper With Infeed Chute Safety Device"; 6,000,642, issued Dec. 14, 1999 to Morey, entitled "Wood Chipper With Infeed Chute Safety Device"; 6,722,596, issued Apr. 20, 2004 to Morey, entitled "Multiple Wheel Feed Wheel Assembly For A Wood Chipper"; 6,357,684, issued Mar. 19, 2002 to Morey, entitled "Adjustable Tension Feed Wheel Assembly

For A Wood Chipper"; 6,830,204, issued Dec. 14, 2004 to Morey, entitled "Reversing Automatic Feed Wheel Assembly For A Wood Chipper"; 6,814,320, issued Nov. 9, 2004 to Morey et al., entitled "Reversing Automatic Feed Wheel Assembly For Wood Chipper", all of which are incorporated herein by reference in their entirety.

[0015] However, although these types of discharge systems have worked well, problems can arise with the discharged flow of waste (e.g., wood) material being restricted, thereby reducing the machines effectiveness, efficiency, and/or capability as compared to prior art systems. Further exacerbating the situation is that these waste systems and machines may also comprise screens, for example disposed within the cutting assemblies and systems which are used to further assist with the processing of the waste material. However, such screens also have the tendency to yet further restrict the flow of discharged material.

[0016] Yet further, such existing systems are unable to additionally process (e.g., secondarily or post-process) the waste material beyond the primary processing and reduction and/or beyond the screens (if so equipped).

[0017] Therefore, there is a need in the art for improved discharge feed systems for a waste processing machine and method thereof which, inter alia, increase the output of these prior art waste processing machines. It is also desirable to provide cutting and discharge systems which can further process the waste material, in addition the prior art cutting discs and drums. Yet further, it is desirable to provide improved cutting systems which increase the flow of material within the cutting chamber (e.g., reduce the backflow), and otherwise reduce material flow restrictions. Still further, needs exist for methods of reducing waste materials which increase flow and output, decrease restrictions, provide for additional (post-primary) processing, as well as increase the utility of such systems. Therefore, there is a need in the art to provide cutting and discharge devices, systems, and methods for a waste processing system that overcomes the above-identified disadvantages.

[0018] Accordingly, a need exists for novel systems and methods which have, among other advantages, the ability to provide for increased material flow and output, reduced restrictions, and additional processing, while being simple to operate and cost effective. Therefore, systems and methods that solve the aforementioned disadvantages and having the aforementioned advantages are desired.

SUMMARY OF THE PRESENT INVENTION

[0019] The aforementioned drawbacks and disadvantages of these former waste processing machines have been identified and a solution is set forth herein by the inventive discharge feed systems for a waste processing machine and method thereof.

[0020] As generally known, operation of the waste processing system typically comprises providing power to the feed and cutting system via an operative power source, whereby bulk waste material (e.g., wood and brush) is then fed, via the infeed assembly, to the feed system. The feed system then operatively captures the material and feeds or supplies the cutting system for processing and reduction, whereby the processed waste material is then discharged from the system via the discharge assembly. Such systems and operation are described in more detail in the patents cited herein and those descriptions are wholly incorporated herein, in their entirety, by reference.

[0021] In this respect, before explaining the preferred embodiment of the disclosure in detail, it is to be understood that the disclosure is not limited in its application to the details of the construction and the arrangement set forth in the following description or illustrated in the drawings. To wit, the discharge feed systems for a waste processing machine and method thereof of the present disclosure is capable of other embodiments and of being practiced and carried out in various ways. Also, it is to be understood that the phraseology and terminology employed herein are for description and not limitation. Where specific dimensional and material specifications have been included or omitted from the specification or the claims, or both, it is to be understood that the same are not to be incorporated into the claims, unless so claimed.

[0022] As such, those skilled in the art will appreciate that the conception upon which this disclosure is based may readily be used as a basis for designing other structures, methods, and systems for carrying out the several purposes of the present invention. It is important therefore that the claims are regarded as including such equivalent constructions, as far as they do not depart from the spirit and scope of the present invention.

[0023] Accordingly, these and other objects, along with the various features and structures that characterize the invention, are pointed out with particularity in the claims annexed to and forming a part of this disclosure. For a better understanding of the discharge feed systems for a waste processing machine and method thereof of the present disclosure, its advantages, solutions, and the specific traits attained by its use, reference should be made to the accompanying drawings and other descriptive matter in which there are illustrated and described the preferred

embodiments of the invention.

[0024] However, the purpose of the Abstract is to enable the United States Patent and Trademark Office, the public generally, and especially the scientists, engineers, and practitioners in the art who are not familiar with patent or legal terms of phraseology, to learn quickly from a cursory inspection the nature of the technical disclosure of the application. Accordingly, the Abstract is intended to neither define the invention nor the application, which is only measured and determined by the claims, nor is the Abstract intended to be limiting as to the scope of the invention in any manner.

[0025] Accordingly, a discharge feed systems for a waste processing machine and method thereof according to the invention incorporates a secondary powered feed system to improve output.

[0026] In one embodiment, a wood chipper having an infeed chute, a power source, a powered feed system, a powered cutting system, and a discharge system is disclosed wherein the improvement relates to a powered discharge feed system which comprises an impeller which is disposed between the powered cutting system and the discharge system, whereby the impeller is operatively connected to a power source for operation thereby.

[0027] In another embodiment, a wood chipper having an infeed chute, a powered feed system, a powered cutting system, and a discharge chute is disclosed wherein the improvement relates to a powered discharge feed system which comprises a powered impeller system disposed within a housing, whereby the impeller system comprises an impeller for inducing flow to a material processed by the powered cutting system; an inlet for receiving material processed by the powered cutting system from the powered cutting system; and an outlet for discharging material processed by the powered cutting system to the discharge system.

[0028] Additional embodiments include: the discharge chute being operatively connected to the outlet; the impeller being rotatably mounted to an axel whereby the axel extends from the impeller and is operatively connected to a power supply; and the axel may further be at least partially supported by an arm which is mounted externally to a housing.

[0029] In yet another embodiment, a powered discharge system for a waste processing machine comprising an infeed system, a powered feed system, and a powered cutting system is disclosed, wherein the powered discharge system comprises an impeller rotatably mounted to a shaft and is adapted to be rotated via an external power source. Also disclosed is an impeller housing which comprises an inlet for receiving waste material from the powered cutting system and an outlet for

discharging waste material, the impeller housing further comprising an inlet mounting bracket which is adapted to be mounted to the powered cutting system of a waste processing machine.

[0030] In still another embodiment a waste processing system comprises: a frame; an infeed assembly which is operatively supported on the frame; a rotatable cutting assembly which is spaced from the infeed assembly and operatively supported on the frame to reduce waste wood material; at least one feed wheel which is operatively supported on the frame and disposed between the infeed assembly and the cutting assembly to feed waste wood material to the cutting assembly; a discharge chute spaced from the cutting assembly and operatively supported on the frame to discharge reduced waste wood material from the waste processing machine; and a discharge feeding assembly which is operatively supported on the frame and disposed within a housing and further disposed between the cutting assembly and the discharge chute to remove reduced waste wood material from the cutting assembly, and to discharge reduced waste wood material to the discharge chute.

[0031] Additional embodiments include wherein: the waste processing system further comprises a screen which is disposed between the cutting assembly and the discharge feeding assembly to size the reduced waste material; the discharge feeding assembly comprises a rotor; a second discharge feeding assembly, wherein the second discharge feeding assembly is disposed between the screen and the first discharge feeding assembly; the second discharge feeding assembly comprising a second rotor; the cutting assembly further comprising a cutting assembly (first) housing defining a (cutting) first chamber, the cutting assembly housing further comprising a cutting assembly housing (first) inlet to receive waste (wood) material and a cutting assembly housing (first) outlet to discharge waste (wood) material, the cutting assembly further comprising a screen disposed adjacent the cutting assembly housing (first) outlet; the discharge feeding assembly further comprises a discharge feeding assembly (second) housing defining a (feeding) second chamber, the discharge feeding assembly housing further comprising a discharge feeding assembly (second) inlet and a discharge feeding assembly (second) outlet, the discharge feeding assembly (second) inlet operatively attached to the cutting assembly housing (first) outlet and the discharge feeding assembly (second) outlet operatively attached to the discharge chute; the discharge feeding assembly further comprises a fan; the waste processing system further comprises a wood chipper comprising an infeed tray wherein the rotatable cutting assembly comprises a rotatable drum; and a discharge feeding assembly operatively supported on the frame, and disposed within a housing, and disposed between the cutting assembly and the discharge chute to remove reduced

waste material from the cutting assembly, and to discharge reduced waste material to the discharge chute.

[0032] In yet another embodiment a wood chipper is disclosed which comprises: a frame; an infeed assembly; a rotatable drum cutting assembly spaced from the infeed assembly to process wood material; at least one feed wheel disposed between the infeed assembly and the cutting assembly to feed wood material to the cutting assembly; a discharge chute spaced from the cutting assembly to discharge reduced wood material from the wood chipper; and a rotor assembly comprising a rotor operatively supported for rotation on an axel and disposed within a rotor housing for rotation therein, wherein the rotor assembly is disposed between the cutting assembly and the discharge chute and further comprises an inlet to receive wood material from the cutting assembly and an outlet to discharge wood material to the discharge chute; and a screen is disposed between the cutting assembly and the rotor assembly whereby the wood processed by the cutting assembly must pass through the screen before being received by the rotor assembly.

[0033] Additional embodiments include: the rotor being adapted to further reduce the wood material; the rotor comprising a plurality of teeth; and wherein the rotor comprises a plurality of rotors, wherein one or more of the rotors further comprise features which reduce and effect and process the characteristics of at least one of the size and shape of the wood material.

[0034] In another embodiment, a waste processing system comprises: a waste product infeed system, and a waste product reducing system which further comprises a rotor assembly rotatably mounted to a support member and comprising a plurality of reducing members mounted thereto to reduce waste product. The waste processing system further comprises a discharge system which is disposed adjacent the waste product reducing system which is adapted to remove the reduced waste product from the waste product reducing system. Further, the waste product infeed system comprises a conveyor having a terminal end adjacent the rotor assembly and an impeller disposed between the rotor assembly and the discharge system to move reduced waste product toward the discharge system.

[0035] Additional embodiments include: wherein the waste product reducing system includes an auger operatively disposed adjacent the rotor assembly to move reduced waste product toward the reducing members; the waste product reducing system further comprising a screen disposed adjacent the rotor assembly; and wherein the impeller is disposed between the screen and the discharge system.

[0036] Also disclosed is a method of reducing material in a waste processing system which comprises: feeding waste material to a cutting assembly disposed within a housing; primarily reducing the waste material within the housing; passing the waste material through a screen; inducing flow to the material passing through the screen and through the housing; secondarily reducing the waste material; and discharging the primarily and secondarily reduced material.

[0037] Another aspect of the present invention includes a waste processing system comprising: an infeed system; a feed system for feeding wood material to the reducing system; a reducing system comprising a rotor assembly rotatably mounted to a support member for reducing wood material; a discharge system disposed adjacent said reducing system, wherein the discharge system is adapted to remove waste product particles from the reducing system; ~~a~~ secondary discharge system disposed between the reducing system and discharge system, wherein the secondary discharge system is adapted to move wood material from the reducing system and to the discharge system; and while not required if so supplied, disposed aft of a screen otherwise disposed between the reducing system and the discharge system.

[0038] Further aspects of the present invention include, wherein: the secondary discharge system comprises a fan, rotor, or blade assembly; an impeller; a suction device; wherein the secondary discharge system may comprise multiple blade assemblies; wherein the reducing system includes a feed side and a discharge side, and the reducing system further includes a material feeding device disposed on the discharge side which is rotatable to move reduced waste material toward the secondary discharge system.

[0039] Further, the material feeding device may comprise an auger; the secondary discharge system may comprise a plurality of fan blades, wherein further one or more of the fan blades are adapted to further process (e.g., reduce) the wood product; and wherein the material feeding device may be timed or varied to rotate at certain intervals so as to "fill" the pockets, then rotate. Yet still further, the system may comprise: a controller and load sensor operatively connected to the secondary discharge system to sense and determine a load on the secondary discharge system and which is adapted to control or change operation of the feed wheels in response to the load (e.g., RPM; PSI); a controller to sense and operate the material feeding device; a secondary discharge system and/or material feeding device which can be operated at a fixed rate or variable rate, whether manual or via controller (e.g., automatic); a secondary discharge system which is operated hydraulically whereby the controller senses the PSI to determine load; a controller

which is a timer and for control of the timing of material feeding device, secondary discharge, and/or feed wheels; a cutting assembly which further comprises one or more safety devices, anvils, cutters or the like to reduce backflow; and all of which either individually or combined, in any combination, allow for backflow reduction, further chip processing, create more uniform chip sizes, and increase the slab-wood processing ability.

[0040] Yet further, the novel devices, systems, and methods disclosed herein may isolated. As such, while the disclosure relates to and discloses a waste processing system, in its entirety, it is to be understood that inventive systems and sub-combinations thereof, including sub-systems, sub-assemblies, parts, components and the like, and methods, unless claimed otherwise, are also contemplated and may be provided for as well.

[0041] Other objects, advantages, and features of the invention will become apparent upon consideration of the following detailed description and drawings. As such, the brief descriptions set forth, rather broadly, the more important features of the present novel invention so that the detailed descriptions that follow may be better understood and so that the contributions to the art may be better appreciated. There are of course additional features that will be described hereinafter which will form the subject matter of the claims.

BRIEF DESCRIPTION OF THE DRAWINGS

[0042] As a compliment to the description and for better understanding of the specification presented herein, 14 pages of drawings are disclosed with an informative, but not limiting, intention.

[0043] Fig. 1 is a side view of a prior art waste processing system;

[0044] Fig. 2 is a front perspective view of another embodiment of a prior art waste processing system;

[0045] Fig. 3 is a side view of the discharge feed system according to an embodiment of the invention, and illustrated on a wood chipper;

[0046] Fig. 4 is an enlarged partial side view of the discharge feed system and cutting assembly of Fig. 3;

[0047] Fig. 5 is an enlarged front perspective view of a discharge feed system according to an embodiment of the invention;

[0048] Fig. 5A is a front perspective view of a discharge feed system according to another embodiment of the invention;

[0049] Fig. 6 is a front perspective view of a discharge feed system according to still another embodiment of the invention, and with a front cover removed for illustrative clarity;

[0050] Fig. 7 is a side view of a replaceable blade of Fig. 5 according to one embodiment of the present invention;

[0051] Fig. 8 is an perspective view of a rotor assembly according to another embodiment of the present invention;

[0052] Fig. 9 is a front view of a rotor of Fig. 8 according to one embodiment of the present invention;

[0053] Fig. 10 is a front view of a rotor of Fig. 6 according to one embodiment of the present invention;

[0054] Fig. 11 is a side view of a side of a housing of Fig. 6 according to one embodiment of the present invention;

[0055] Fig. 12 is an front view of a rotor assembly according to still another embodiment of the present invention, comprising replaceable blades;

[0056] Fig. 13 is an enlarged rear perspective view of the cutting assembly of Fig. 3;

[0057] Fig. 14 is an enlarged partial side view of the discharge feed system and cutting assembly according to yet another embodiment of the present invention.

[0058] Fig. 15 is an enlarged sectional side view of the cutting assembly and discharge feed system according to still another embodiment of the invention.

DETAILED DESCRIPTION OF THE PREFERRED EMBODIMENT

[0059] The best mode for carrying out the invention is presented in terms of the preferred embodiment, wherein similar referenced characters designate corresponding features throughout the several figures of the drawings.

[0060] For purposes of description herein, the terms “upper”, “lower”, “right”, “left”, “rear”, “front”, “vertical”, “horizontal”, and derivatives thereof, shall relate to the invention as oriented in Fig. 3. However, it is to be understood that the invention may assume various alternative orientations, except where expressly specified to the contrary. It is also to be understood that the specific devices and processes illustrated in the attached drawings and described in the following specification are exemplary embodiments of the inventive concepts defined in the appended claims. Hence, specific dimensions and other physical characteristics relating to the embodiments disclosed herein are not to be considered as limiting, unless the claims expressly state otherwise.

[0061] Reference will now be made in detail to the present preferred embodiments of the invention, examples of which are illustrated in the accompanying drawings. Wherever possible, these same referenced numerals will be used throughout the drawings to refer to the same or like parts. Like

features between the various embodiments utilize similar numerical designations. Where appropriate, the various similar features have been further differentiated by an alphanumeric designation, wherein the corresponding alphabetic designator has been changed. Further, the dimensions illustrated in the drawings (if provided) are included for purposes of example only and are not intended to limit the scope of the present invention. Additionally, particular details in the drawings which are illustrated in hidden or dashed lines are to be considered as forming no part of the present invention.

[0062] As used herein, the terms wood and wood products are meant to be used and defined in their broad, general, and ordinary sense, and the terminology is meant to include trees, logs, brush, trunks, stumps, stems, branches, leaves, or the like, or anything else that could otherwise be recycled, reduced, or otherwise processed; and further includes non-naturally occurring or manufactured wood products such as lumber, pallets, or other manufactured products that could otherwise be recycled, reduced, or otherwise processed, as is generally known within the art.

[0063] As used herein, the term waste processing machine is meant to be used and defined in its general and ordinary sense. To wit, systems that recycle, reduce, or otherwise process wood products. Included therein are machines that chip, cut, grind, or otherwise reduce wood waste products and include, generally, chippers and/or shredders. Of course, this is not meant to be limiting in any manner and these systems may take on numerous configurations, and may be used for numerous purposes as is generally known within the art.

[0064] To a large extent hereinafter we will limit our discussion of the invention as related to a wood chipper. However, the inventive embodiments disclosed herein are not meant to be so limited (unless so claimed), and the inventive matter disclosed herein may be utilized on any waste processing machine.

[0065] However, although these types of discharge systems have worked well, problems can arise with the discharged flow of waste (e.g., wood) material being restricted, thereby reducing the machines effectiveness, efficiency, and/or capability as compared to prior art systems. Further exacerbating the situation is that these waste systems and machines may also comprise screens, for example disposed within the cutting assemblies and systems which are used to further assist with the processing of the waste material. However, such screens also have the tendency to yet further restrict the flow of processed and discharged material. Further, while it is known to provide augers on the forward or feed side of the cutting assembly to assist with additional

processing within the cutting system chamber or housing, such augers are limited and provide little to assistance with the flow of material to the discharge system or chute, as well may be relatively slow in operation and overall volume and output (e.g., with respect to time).

[0066] Yet further, such existing systems are unable to additionally process (e.g., secondarily or post-process) the waste material beyond the primary processing and reduction and/or beyond the screens (if so equipped).

[0067] Therefore, there is a need in the art for improved discharge feed systems for a waste processing machine and method thereof which, inter alia, increase the output of these prior art waste processing machines. It is also desirable to provide cutting and discharge systems which can further process the waste material, in addition the prior art cutting discs and drums. Yet further, it is desirable to provide improved cutting systems which increase the flow of material within the cutting chamber (e.g., reduce the backflow), and otherwise reduce material flow restrictions. Still further, needs exist for methods of reducing waste materials which increase flow and output, decrease restrictions, provide for additional (post-primary) processing, as well as increase the utility of such systems. Therefore, there is a need in the art to provide cutting and discharge devices, systems, and methods for a waste processing system that overcomes the above-identified disadvantages.

[0068] Accordingly, a need exists for novel systems and methods which have, among other advantages, the ability to provide for increased material flow and output, reduced restrictions, and provide for additional processing, while being simple to operate and cost effective. Therefore, systems and methods that solve the aforementioned disadvantages and having the aforementioned advantages are desired.

[0069] While not meant to be limiting in any manner, it is envisioned that the disclosed system may offer the following advantages: the ability to provide for an increased feed and production rate; increased flow and output thereby providing for a higher velocity discharge stream; reducing backflow while increasing the material processing ability of the cutting chamber; an increase in the amount of suction thereby increasing the induced flow of material through the system and to the discharge system; the ability to provide for an increased speed of the feed and cutting systems; the ability to provide additional options with respect to the character of the waste material produced; improving the consistency and uniformity of the size (e.g., chip size) and shape of the waste produced material.

[0070] Referring now to the drawings and to Fig. 1 in particular, a prior art waste processing machine 10 comprises a wood chipper shown generally at 10' and includes a frame 12' supported by a pair of wheels 14', a conventional trailer hitch 16' to allow the chipper to be towed by a vehicle (not shown), and a power source 18'. Supported on frame 12', the wood chipper 10' includes: an infeed assembly or system 20' comprising an infeed tray 22' and an infeed chute 24' to allow wood material to enter the wood chipper; a feed system 30' comprising a feed wheel assembly (not shown), the feed wheel assembly typically comprising at least one feed wheel (not shown) and one or more feed wheel housings 36', disposed between the infeed system 20' and the cutting system 40', to feed wood material to the cutting system; the cutting assembly or system 40' is spaced from the feed system 30' and comprises cutters (not shown) and a cutting assembly housing 48'; and a discharge assembly 50' comprising a discharge chute 52'.

[0071] The power source 18' typically comprises an internal combustion engine and provides rotational energy to both the feed wheels (not shown) of the feed system 30' and the cutting disc or drum (not shown) of the cutting system 40'. The engine 18' operatively couples the feed system 30' and cutting system 40' to cause rotation of the feed wheels (not shown) and the rotatable disc or drum (not shown). The engine 18' is typically operated such that the cutting disc/drum (not shown) rotates at a relatively high velocity, while the feed wheels (not shown) rotate relatively slowly.

[0072] In many such prior art systems, these chippers 10' include a rotatable shaft (not shown) operably connected to the disc/drum of the cutting assembly 30', and one or more pulleys (not shown) disposed about one end of the shaft. The chipper may also include a rotatable shaft (not shown) operatively connected to the engine and one or more pulleys (not shown) disposed about the shaft (not shown), whereby the chipper may then further include one or more belts (not shown) disposed over, around, and interconnecting the various pulleys thereby operatively connecting the engine and cutting systems. It is also generally known to operatively connect the engine to the feed system 25' via a hydraulic system (e.g., by one or more hydraulic pumps (not shown)) which rotate one or more of the feed wheels of the feed wheel assembly.

[0073] In operation then, the material which is to be reduced (e.g., waste material; trees; logs; brush, branches; and other bulk wood products) is fed into the infeed chute 24' and captured between, for example, the opposed, rotating feed wheels (not shown) of the feed system 30' which feeds, pulls, or otherwise cause the waste material (e.g., bulk wood products) to encounter the cutting

disc/drum (not shown) of the cutting system 40'. The cutting system then reduces the material (e.g., into wood chips) which is then expelled through the discharge assembly 50' via the discharge chute 52'.

[0074] It will be understood that the wood chipper 10 of the present disclosure may comprise any suitable waste reducing machinery such as the trailerable wood chipper as seen in Figs. 1 and 2 or any other movable or stationary machinery used to chip, grind, cut, or otherwise reduce bulk products.

[0075] Further, while one preferred embodiment incorporates a pair of opposed, horizontally aligned and opposed feed wheels, it is also to be understood that any feed system can be incorporated into the invention, or none at all. It is to be further understood that when such a feed system is discussed, while the nature of the description, including the structure and operation of the feed system, is described with respect to hydraulic systems, such feed systems (e.g., feed wheels) may be powered by any other suitable manner.

[0076] Yet still further, while the preferred embodiment incorporates an internal combustion engine, the wood chipper can be powered by and in any other suitable manner including, but not limited to, electricity, gas, diesel, and a power take-off (e.g., from an auxiliary power source) without departing from the scope of this invention.

[0077] Referring now to Fig. 2, a prior art waste processing machine for reducing material is shown generally at 10". The waste processing system includes a frame 12" supported by a plurality of wheels 14"; a tongue, mount, or trailer hitch 16" to allow the system to be towed by a vehicle (not shown); and a power source 18". The material processing machine 10" also includes an infeed assembly 20" including an infeed conveyor 24"; a feed system 30" typically including one or more feed wheels 32" disposed between the infeed system 20" and the cutting system 30" to feed wood material to the cutting system; a cutting assembly or system 40" spaced from the feed system 25" and typically comprising rotatable cutters (not shown); and a discharge assembly 50" comprising a discharge conveyor 52". It should be appreciated that, with this structure, the infeed system 20" and material reducing system 40" can be transported together while the discharge system 50" can be transported separately therefrom. It should also be appreciated that the processed material may comprise many forms including but not limited to wood, wood products, waste, boards, pallets, roots, brush, etc., and processed into different forms such as wood chips, sawdust, waste material, etc.

[0078] In operation then, material enters the material processing machine 10'' through the infeed system 20'' where it is directed to the material reducing system 40''. The material reducing system 40'' reduces the material and directs it to the discharge system 50'' where the reduced material is expelled from the material processing machine 10''.

[0079] It should be appreciated that the primary components of the wood chipper and the waste processing machine, generally, comprise similar components and operation. To wit, both systems comprise an infeed system, a feed system (if so equipped), a cutting or reducing system, and a discharge system and, while the particular configurations of each of these systems are adapted for its particular use as either a wood chipper or a waste processing machine, both systems are utilized to process (e.g., reduce) material (e.g., bulk wood products). As such: as used herein the terms wood chipper, waste processing machine and system, waste reduction machine and system, or other like terminology may used interchangeably; therefore, when one term is used for brevity, it is to be understood that this is not meant to be restrictive in nature and the definition ascribed thereto should encompass all of the former; and further, when the term waste processing machine or system is used, it is to be understood that this definition is to encompass a wood chipper; and when the term wood chipper is used, it is to be understood that this definition is to encompass a waste processing machine; as such, various terminology may be used herein for brevity, with the stipulation that the invention disclosed herein may be used on, is capable of, and may be adapted for use within or with-on any waste processing machine, including but not limited to a wood chipper, unless defined otherwise.

[0080] The disadvantages and drawbacks of the prior art are overcome through the waste processing system of the present invention, wherein one preferred embodiment 10 is disclosed. Referring now to Fig. 3, one embodiment of the discharge feed systems for a waste processing machine and method thereof is shown generally at 10 and includes a frame 12 supported by a pair of wheels 14, and a trailer hitch 16 in order to allow the waste processing system to be transported by a vehicle. Supported on the frame 12 are a cutting system 40, an infeed assembly 20, and a discharge chute assembly 50. A power system 18, typically comprising an internal combustion engine, is also mounted on frame 12 to provide power to both a feed system 30 and the cutting system 40.

[0081] As is generally known, operation of waste processing system 10 typically comprises providing power to the cutting system 40 and the feed system 30 through power supply 18, whereby feed

system 30 feeds or supplies material to cutting system 40, and cutting system 40 is used to reduce or otherwise process the wood products which are then dispensed through discharge chute assembly 50.

[0082] In general, and unless claimed otherwise, prior art feed and cutting systems are generally known and well utilized. For example, known cutting systems may comprise a rotary cutting mechanism, blade, or disc, and known feed system may comprise one or more feed wheels. Both of these systems being described in more detail in the patents cited hereinabove and those descriptions are wholly included herein, in their entirety, by reference. Further, it is to be understood that numerous configurations of such known devices may be used and the description herein is not meant to be limiting with respect to such systems, unless otherwise noted and claimed, and equivalent components may be used.

[0083] In a broader sense, Fig. 4 illustrates an embodiment of the discharge feed system 60 which includes a secondary discharge system, material feed system, fan assembly, rotor assembly, impeller assembly, feed assembly, and suction assembly 62 disposed in a housing 70, the housing comprising an inlet 72 for receiving waste material, and outlet 74 for discharging the waste material. In the exemplary embodiment illustrated, the rotor assembly is rotatably mounted within housing 70 via an axel 64.

[0084] housing 70 is generally enclosed except for inlet 72 and outlet 74, and includes a first side or wall 76, a second side or wall 77, and a third side or sidewall 78 extending therebetween, thereby defining a chamber 71.

[0085] In the embodiment depicted by Fig. 5, the inlet 72 is configured for connection with the cutting system 40 via a bracket assembly 73 and in the embodiment depicted by Fig. 5, the inlet 72 comprises a rectangular orifice which is generally centrally located on the first side 72 of the housing the inlet is configured for connection with the cutting system 40 via a chute assembly 75.

[0086] Operatively housed within housing 70 and operatively connected to the power source 18 for rotation thereby is the secondary discharge system, material feed system, fan assembly, rotor assembly, impeller assembly, feed assembly, and suction assembly 62-which may comprise one or more of a material feed system, fan, rotor assembly, impeller assembly, feed assembly, and suction assembly device or devices 66 which are adapted to create a vacuum (e.g., negative or reduced pressure) in the inlet 72 such that waste yard, waste, and organic material may be drawn

in therethrough and into the interior processing or mulching chamber 71 for processing, and then expelled or discharged through the outlet 74. As used herein, such rotor assemblies are described in detail in the corresponding PCT application filed June 16, 2013, entitled "Waste And Brush Collection And processing System" to Morey, which is which is incorporated herein by reference in its entirety.

[0087] As illustrated by Fig. 4, one embodiment of the rotor assembly 62 is illustrated and comprises a first rotor, impeller, suction device, or fan 66.

[0088] Figs. 5 and 7 illustrate an embodiment of the rotor assembly 62A comprising a rotor 66A wherein one or more of the rotor blades 164 include replaceable blades 166 for servicing and replacement. For example, rotor set 66A may comprise a backing rotor 165 to which may be replaceably mounted a replaceable rotor blade 166. In the example illustrated, replaceable blade 166 includes apertures 168 for attaching (e.g., via fasteners not shown) blade 166 to blade 165. Fig. 7 illustrates an embodiment of a replaceable rotor 66C which includes teeth 170.

[0089] Another embodiment 62B is illustrated by Fig. 6 and comprises a rotor, impeller, suction device, or fan 66B, and a second rotor, impeller, suction device, or fan 67 disposed axially (via axel 64) within housing 70. For exemplary purposes only, the illustrated rotor 66 is primarily used for imparting flow to the material stream, while rotor 67 is primarily for further processing (e.g., reduction; chipping) of the material being processed. Also illustrated by Fig. 6, rotor assembly 62B includes first rotor 66B which comprises teeth, notches or other features 170, and a second rotor 67 which comprises teeth, notches or other features 171.

[0090] Still another embodiment 62C is illustrated in Fig. 8 which includes a third rotor, impeller, suction device, or fan 68, and may also comprise teeth, notches or other features 172. For exemplary purposes only, illustrated blade set 68 may comprise a blade configured to impart both flow to the material stream as well as for further processing of the material stream.

[0091] Figure 9 illustrates an embodiment of the rotor, impeller, suction device, or fan 68 and in one embodiment includes blades 168 having teeth, notches or other features 172, and in one embodiment the blades 168 is formed by bending along areas or bends 168A to form the angled blade ends. Fig. 10 illustrates an of the rotor, impeller, suction device, or fan 67 and in one embodiment includes blades 167 having teeth, notches or other features 171. Further, in one embodiment, the blades 167 are formed by bending along areas or bends 167A to form the angled blade ends.

[0092] Figure 11 illustrates an embodiment of the housing sidewall 78A which may be formed from a single unitary piece of material (e.g., steel) by bending along areas or bends, for example only, 178 and therefore the housing 70 may be adapted for roll forming.—Figure 12 illustrates an embodiment of the rotor assembly 62D comprising various rotors and teeth as described herein-above and for operation with housing 70.

[0093] Referring back now to Figs. 3-4, in general operation, reducing system 10 is transported to the desired site utilizing the trailerable frame 12 and hitch 16. Once on-site the system 10 is started and allowed to initialize or ramp-up to normal operational parameters. Wood products are then fed into system 10, via infeed assembly 20 and feed system 30 to cutting assembly 40 where reduction (e.g., chipping, shredding, and cutting) takes place therein. The reduced material is then discharged through (if supplied) screen 34 to discharge system 50 for discharge from the system.

[0094] Prior art systems utilize the flow generated from the cutting system to "feed" (e.g., impart velocity and flow) the reduced material in order for it to be discharged. However, such systems are problematic in that the imparted flow may not allow or produce enough motion, velocity, and flow in order to effectuate the proper and desired flow of and to the exhausted waste material. This problem is then intensified when such systems include the use of a screen 44 which further acts to restrict the flow of material. Figure 13 illustrates a cutting system 40 comprising such a screen 44, wherein such systems and operation thereof are described in more detail in the patents cited herein-above and those descriptions are wholly incorporated herein, in their entirety, by reference. Additionally, reference is also made to international patent application no. PCT/US12/47773 entitled "SAFETY DEVICE, BACKFLOW REDUCTION DEVICE, CONFORMABLE WOOD PROCESSING DEVICE, AND METHODS THEREOF FOR A WASTE PROCESSING SYSTEM" filed 7/21/2012, to Morey, the entire contents of which is incorporated herein by reference in its entirety, and the herein disclosed system may result in or otherwise assist with prevention and reducing the backflow or blow-back of the wood particulate in the reducing chamber, as well as increase the systems ability to process conformable wood and slab-wood.

[0095] Therefore, in order to effectuate increased material flow, the secondary or discharge feed system 60 alleviates and eliminates any such reduced flow by increasing the suction, flow, velocity and otherwise induces, creates, and acts to increase the output of the material from inside 43 the

cutting chamber housing 46, via the discharge feed assembly 60, to the discharge system 50.

[0096] Further, and as illustrated by Fig. 14, additional feed devices 82 can also be used to assist with or otherwise impart additional movement to the processed material to the discharge feed assembly 60 for further processing thereby. In the exemplary illustrated embodiment, the feed device 82 is a rotatable disc or drum comprising pockets or cavities 84 which when rotated will move or otherwise assist with and supply the processed material from within the cutting chamber interior 43, to the inlet 72 of the discharge feeding system 60. As illustrated, a screen 44 is not required to benefit from the increased output of system 60. However when used, such a feed device 82 may be disposed rearwardly (aft) of the screen 44.

[0097] Consequently, and for descriptive and non-limiting purposes only, when the material enters the impeller chamber 71 it is imparted with additional velocity via rotor assembly 62 and, if desired via one or more chipping/reducing blades (e.g., 66B, 67, 68), additionally process the material (e.g., chipped and further reduced). For example, a rotor assembly 66 may be configured primarily for imparting flow to the material stream; while a rotor assembly 67 may be configured primarily for further processing (e.g., reduction; chipping) of the material stream; while further a rotor assembly may be configured to both impart motion and reduce the material for further as for example via assembly 68; and including any combination thereof.

[0098] Additionally, a controller 90 can be provided which may be operatively connected to one or more of the primary systems of the waste processing machine 10 (e.g., engine 18, cutting system 40, and feed system 30), and may control one or more of the secondary discharge systems 60 (e.g., one or more impeller or rotor systems 62, as well as tertiary material feed device, impeller or rotor systems 82) in response to a load on one or more of the primary systems.

[0099] For example, in one embodiment, the impeller assembly 62 is hydraulically connected to the power source 18, wherein a load is measured (e.g., a pressure) of one or more components of the system is measured and sensed by the controller 90. In response thereto, the feed wheel system 30 is turned on, of, and/or varied in speed accordingly. By way of further example only: the controller may deactivate the feed wheels when a pressure of 3000 pounds per square inch (PSI) is reached and activate the feed wheels when a pressure of 1500 PSI is reached.

[00100] U.S. Patent Nos. 6,830,204, 6,814,320 to Morey et al., entitled Reversing Automatic Feed Wheel Assembly for Wood Chipper are incorporated herein by reference in their entirety, and offer further descriptive and exemplary details. As such for example, secondary discharge system 60

may be turned on, off, and varied via controller 90 as determined by a sensed load and when above, at, or below a predetermined level.

[00101] In yet another embodiment control system 90 may comprise one or more sensors 222 which are operatively connected to one or more of the power source 18, feed system 30, and cutting assembly 40. Sensors 222 may be adapted to read, determine, or sense the load on the one or more systems 18, 30, and 40. For example in one embodiment, sensors 222 are adapted to determine the load on system 10 via the engine speed of engine 18, thereby sending a signal to controller 90, wherein controller 90 in response thereto determines the proper operation of the secondary discharge system 60.

[00102] Further, the control system 90 may also be operatively connected to the feed system 30 and cutting assembly 40 for operation thereby as described herein-above. Yet further, the control system 90 may be operatively connected to feed system 30 in order to stop, start, and/or reverse the one or more feed wheels according to particular desired operational configurations. It should also be appreciated that the control system 90 may be used with mechanical, electrical, and hydraulic systems.

[00103] Advantageously, the discharge feed systems for a waste processing machine and method thereof of the present invention yields a waste processing machine with improved material flow and characteristics.

[00104] The solutions offered by the invention disclosed herein have thus been attained in an economical, practical, and simple manner. To wit, novel discharge feed systems for a waste processing machines and method thereof have been disclosed which increase utility, efficiency, reliability, and material flow and uniformity. While preferred embodiments and example configurations of the inventions have been herein illustrated, shown, and described, it is to be appreciated that various changes, rearrangements, and modifications may be made therein, without departing from the scope of the invention as defined by the claims. It is intended that the specific embodiments and configurations disclosed herein are illustrative of the preferred and best modes for practicing the invention, and should not be interpreted as limitations on the scope of the invention as defined by the claims, and it is to appreciated that various changes, rearrangements, and modifications may be made therein, without departing from the scope of the invention as defined by the claims.

The inventions claimed is:

1. A wood chipper having an infeed chute, a power source, a powered feed system, a powered cutting system, and a discharge system, wherein the improvement relates to a discharge feed system which comprises:

an impeller disposed between the powered cutting system and the discharge system, the impeller operatively connected to a power source for operation thereby.

2. A wood chipper having an infeed chute, a powered feed system, a powered cutting system, and a discharge chute, wherein the improvement relates to a powered discharge feed system which comprises:

a powered impeller system, the impeller system comprising an impeller for inducing flow to a material processed by the powered cutting system, an inlet for receiving material processed by the powered cutting system and an outlet for discharging material processed by the powered cutting system.

3. The system as set forth in claim 2, wherein:

the discharge chute is operatively connected to the outlet.

4. The system as set forth in claim 3, wherein:

the impeller is rotatably mounted to an axel, the axel extending from the impeller for operative connection to a power supply.

5. The system as set forth in claim 4, wherein:

the axel is at least partially supported by an arm mounted externally to a housing, the housing enclosing the impeller.

6. A powered discharge system for a waste processing machine comprising an infeed system, a powered feed system, and a powered cutting system, the powered discharge system comprising:

an impeller rotatably mounted to a shaft and disposed within an impeller housing;

the impeller housing comprising an inlet for receiving waste material and an outlet for discharging waste material;

the impeller housing comprising an inlet mounting bracket which is adapted to be mounted to the powered cutting system of a waste processing machine.

7. A waste processing system comprising:

a frame;

an infeed assembly operatively supported on the frame;

a rotatable cutting assembly spaced from the infeed assembly and operatively supported on the frame to reduce waste material;

at least one feed wheel operatively supported on the frame and disposed between the infeed assembly and the cutting assembly to feed waste material to the cutting assembly;

a discharge chute spaced from the cutting assembly to discharge reduced waste material from the waste processing machine; and

a discharge feeding assembly operatively supported on the frame and disposed between the cutting assembly and the discharge chute to remove reduced waste material from the cutting assembly, and to discharge reduced waste material to the discharge chute.

8. The system as set forth in claim 7, wherein:

the waste processing system further comprises a screen disposed between the cutting assembly and the discharge feeding assembly to size the reduced waste material.

9. The system as set forth in claim 8, wherein:

the discharge feeding assembly comprises a rotor.

10. The system as set forth in claim 8, further including:

a second discharge feeding assembly, the second discharge feeding assembly disposed between the screen and the first discharge feeding assembly.

11. The system as set forth in claim 10, wherein:

the second discharge feeding assembly comprises a second rotor.

12. The system as set forth in claim 7, wherein:

the cutting assembly further comprises a first housing defining a first chamber, the cutting assembly housing further comprising a first inlet to receive waste material and a first outlet to discharge waste material, the cutting assembly further comprising a screen disposed adjacent the first outlet.

13. The system as set forth in claim 12, wherein:

the discharge feeding assembly further comprises a second housing defining a second chamber, the discharge feeding assembly housing further comprising a second inlet and a second outlet, the second inlet operatively attached to the first outlet and the second outlet operatively attached to the discharge chute.

14. The system as set forth in claim 13, wherein:

the discharge feeding assembly further comprises a fan.

15. The system as set forth in claim 14, wherein:

the waste processing system further comprises a wood chipper comprising an infeed tray; and

wherein the rotatable cutting assembly comprises a rotatable drum.

16. The system as set forth in claim 7, wherein:

a discharge feeding assembly operatively supported on the frame and disposed between the cutting assembly and the discharge chute to remove reduced waste material from the cutting assembly, and to discharge reduced waste material to the discharge chute.

17. A wood chipper comprising:

a frame;

an infeed assembly ;

a rotatable drum cutting assembly spaced from the infeed assembly to process wood material;

at least one feed wheel disposed between the infeed assembly and the cutting assembly to feed wood material to the cutting assembly;

a discharge chute spaced from the cutting assembly to discharge reduced wood material from the wood chipper; and

a rotor assembly comprising a rotor operatively supported for rotation on an axel and disposed within a rotor housing for rotation therein , the rotor assembly disposed between the cutting assembly and the discharge chute, the rotor assembly further comprising an inlet to receive wood material from the cutting assembly and an outlet to discharge wood material to the discharge chute;

a screen disposed between the cutting assembly and the rotor assembly, whereby the wood processed by the cutting assembly must pass through the screen before being received by the rotor assembly.

18. The system as set forth in claim 17, wherein:

the rotor is adapted to reduce the wood material.

19. The system as set forth in claim 17, wherein:

the rotor comprises a plurality of teeth.

20. The system as set forth in claim 17, wherein:

the rotor comprises a plurality of rotors, wherein one or more of the rotors further comprise features which reduce at least one of the size and shape of the wood material.

21. A waste processing system comprising:

a waste product infeed system;

a waste product reducing system comprising a rotor assembly rotatably mounted to a support member, the rotor assembly having a rotor and a plurality of reducing members mounted thereto to reduce waste product;

a discharge system disposed adjacent the waste product reducing system, the discharge system adapted to remove the reduced waste product from the waste product reducing system;

the waste product infeed system comprising a conveyor having a terminal end adjacent the rotor assembly; and

an impeller disposed between the rotor assembly and the discharge system to move reduced waste product toward the discharge system.

22. The system as set forth in claim 21, wherein:

the waste product reducing system includes an auger operatively disposed adjacent the rotor assembly to move reduced waste product toward the reducing members.

23. The system as set forth in claim 22, wherein:

the waste product reducing system further comprising a screen disposed adjacent the rotor assembly.

24. The system as set forth in claim 23, wherein:

the impeller is disposed between the screen and the discharge system.

25. A method of reducing material in a waste processing system comprising:

feeding waste material to a cutting assembly disposed within a housing;

primarily reducing the waste material within the housing;

inducing flow of the material passing through the screen;

secondarily reducing the waste material; and

discharging the reduced material.

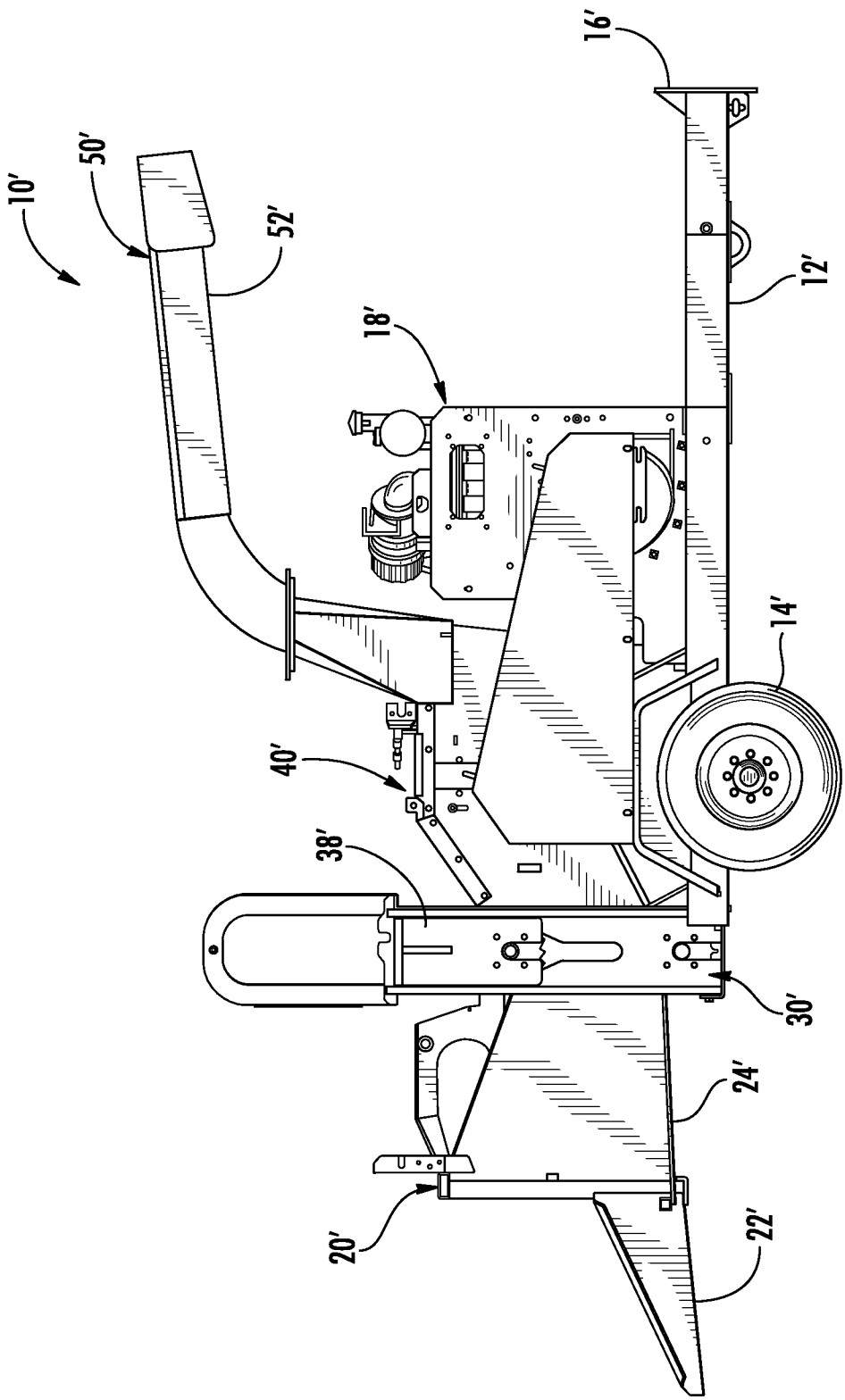

FIG. 1
(PRIOR ART)

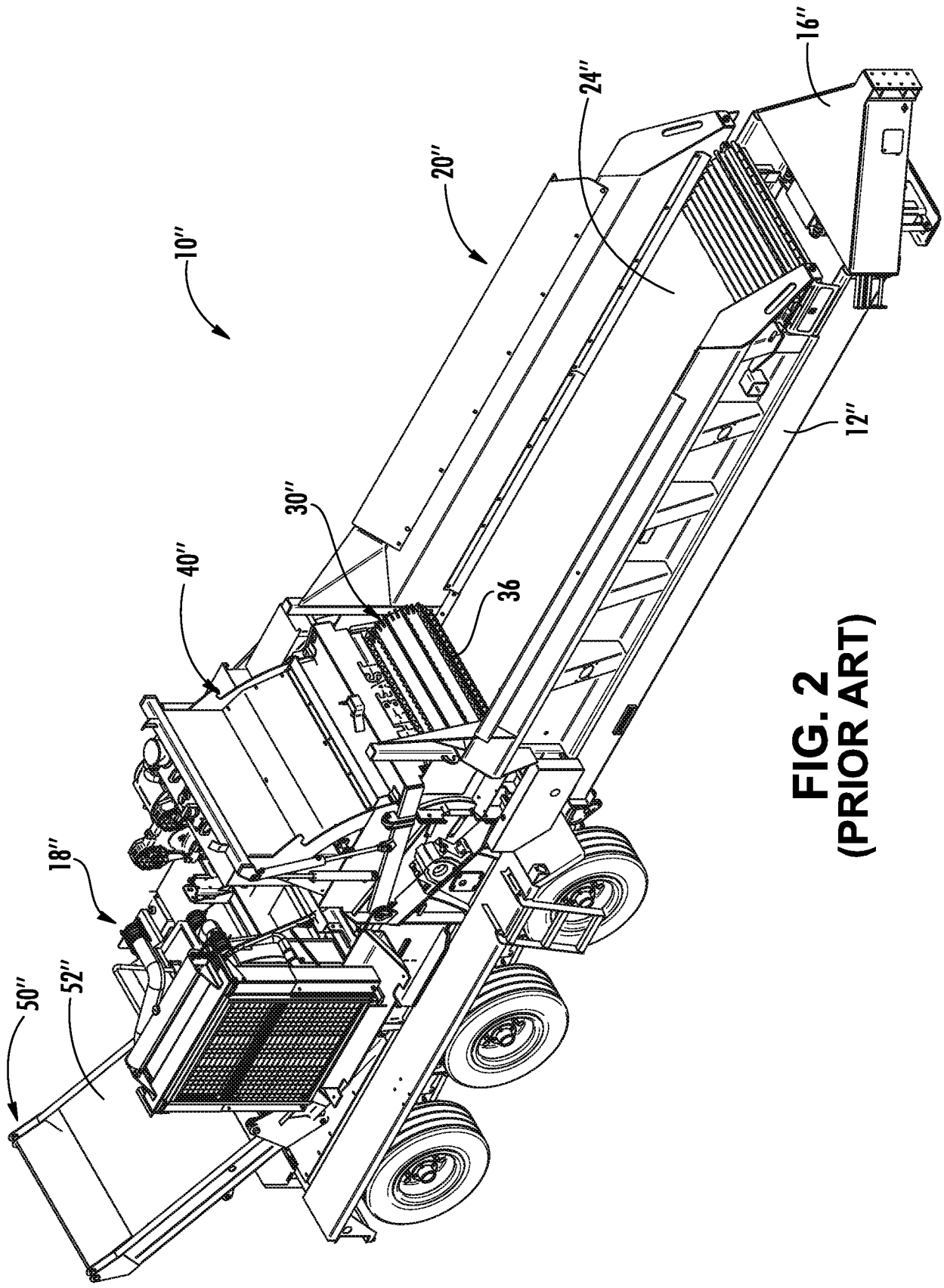

FIG. 2
(PRIOR ART)

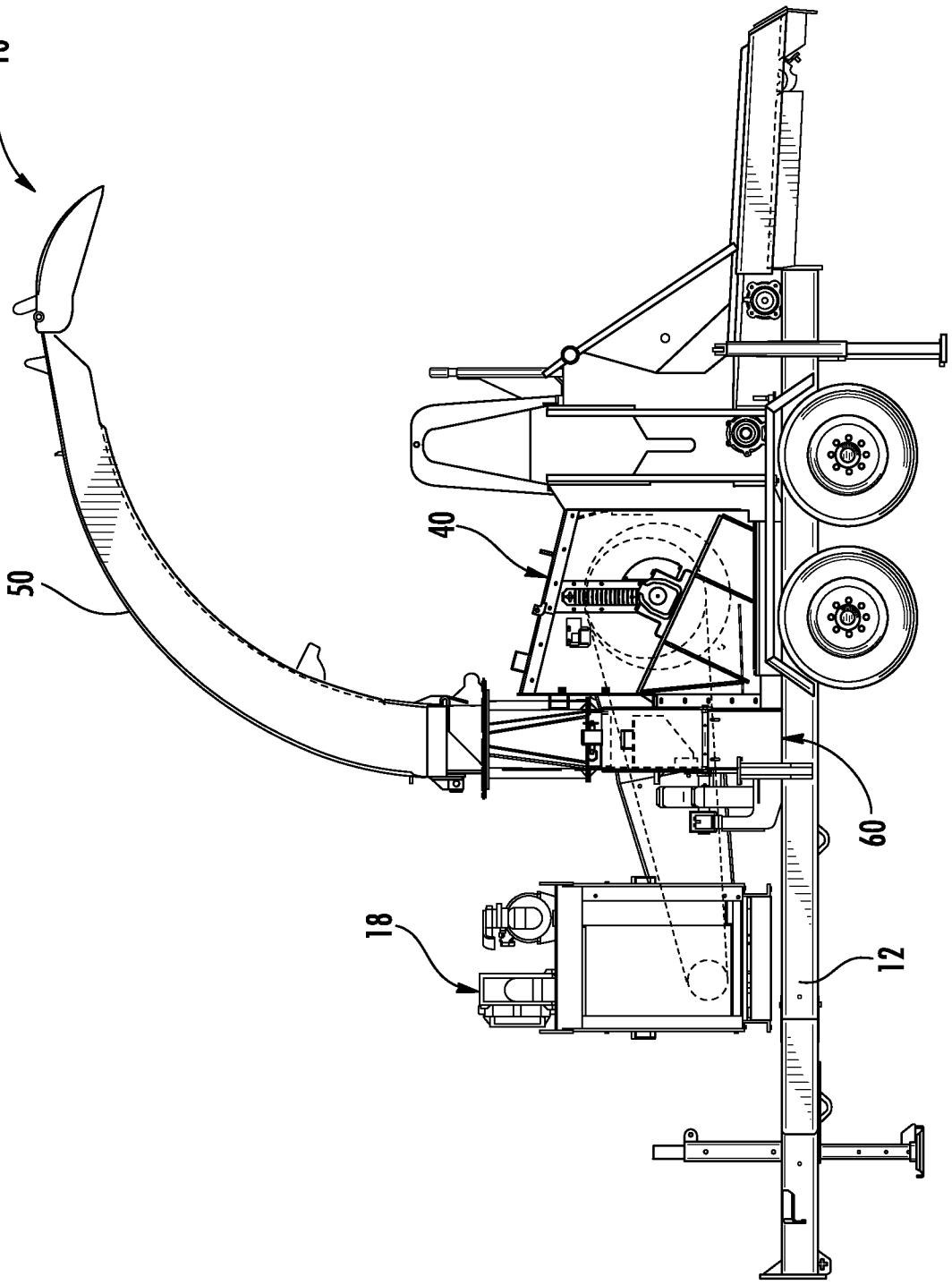

FIG. 3

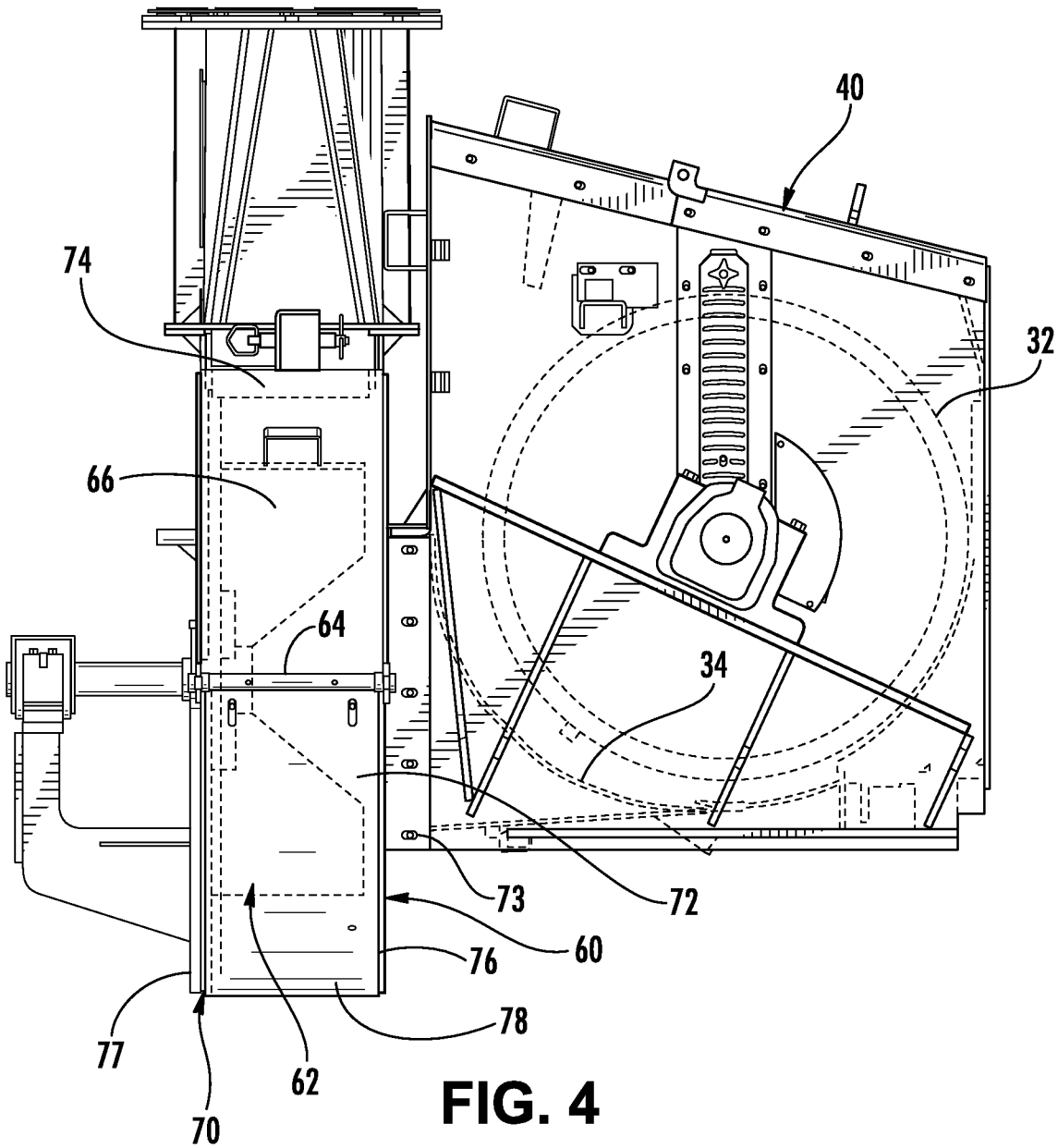

FIG. 4

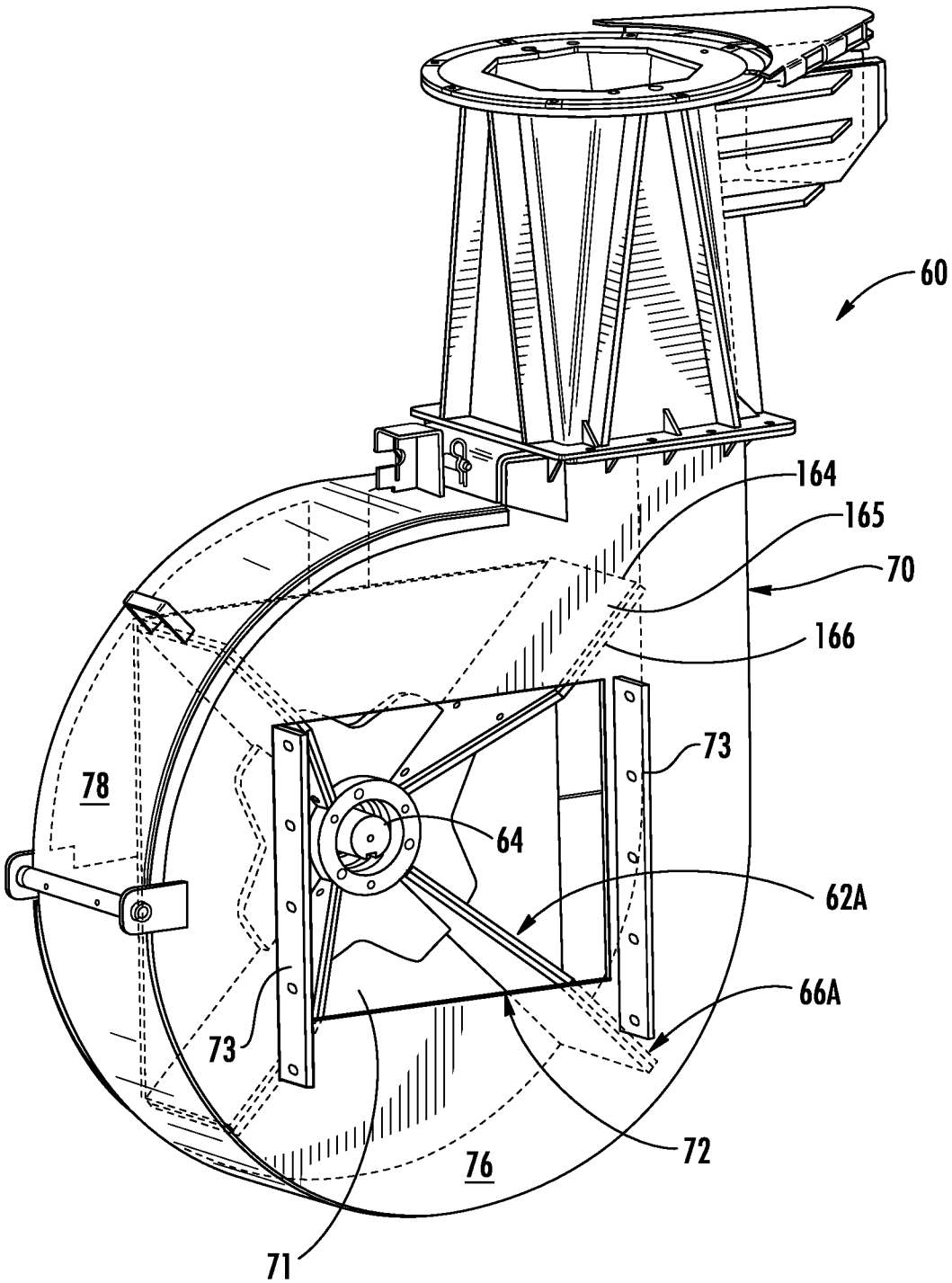

FIG. 5

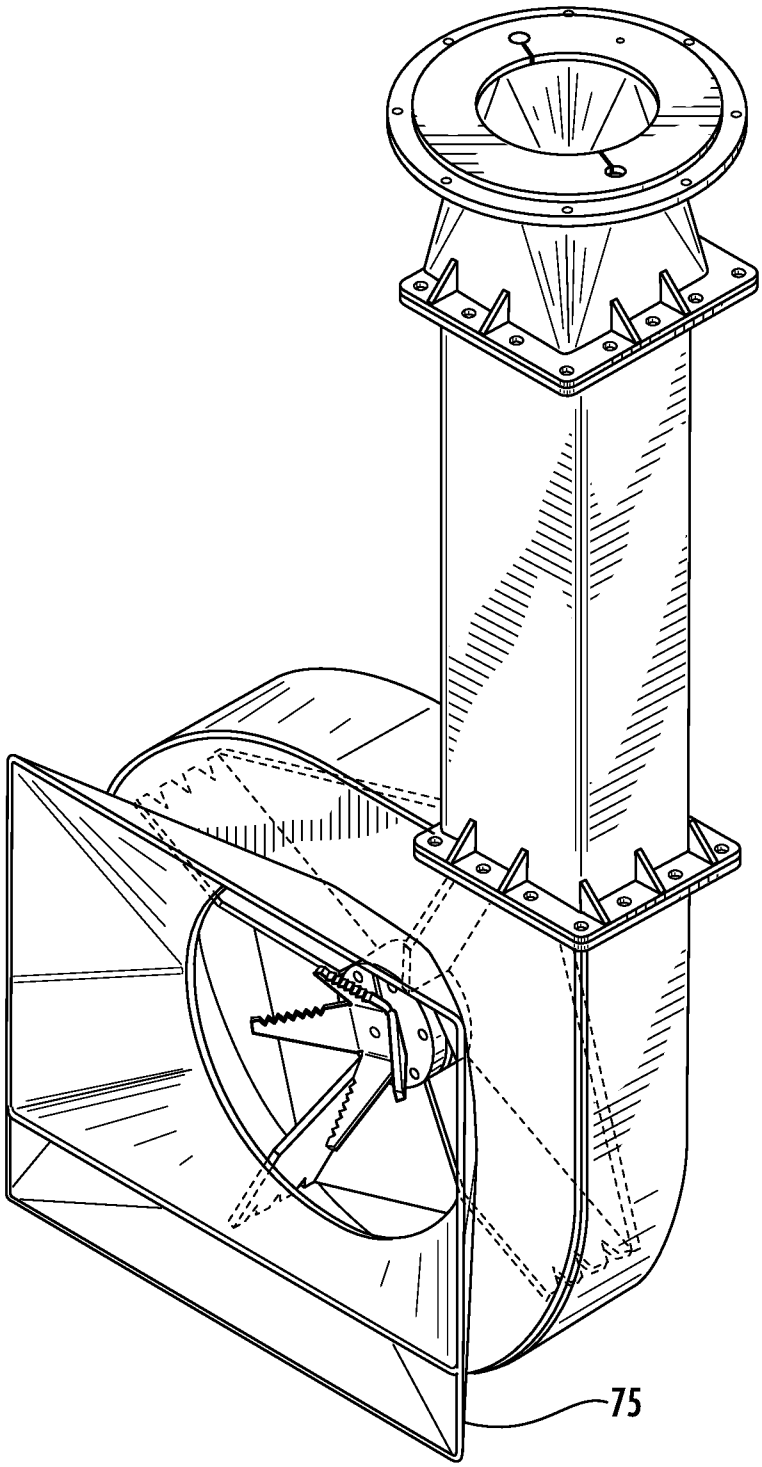

FIG. 5A

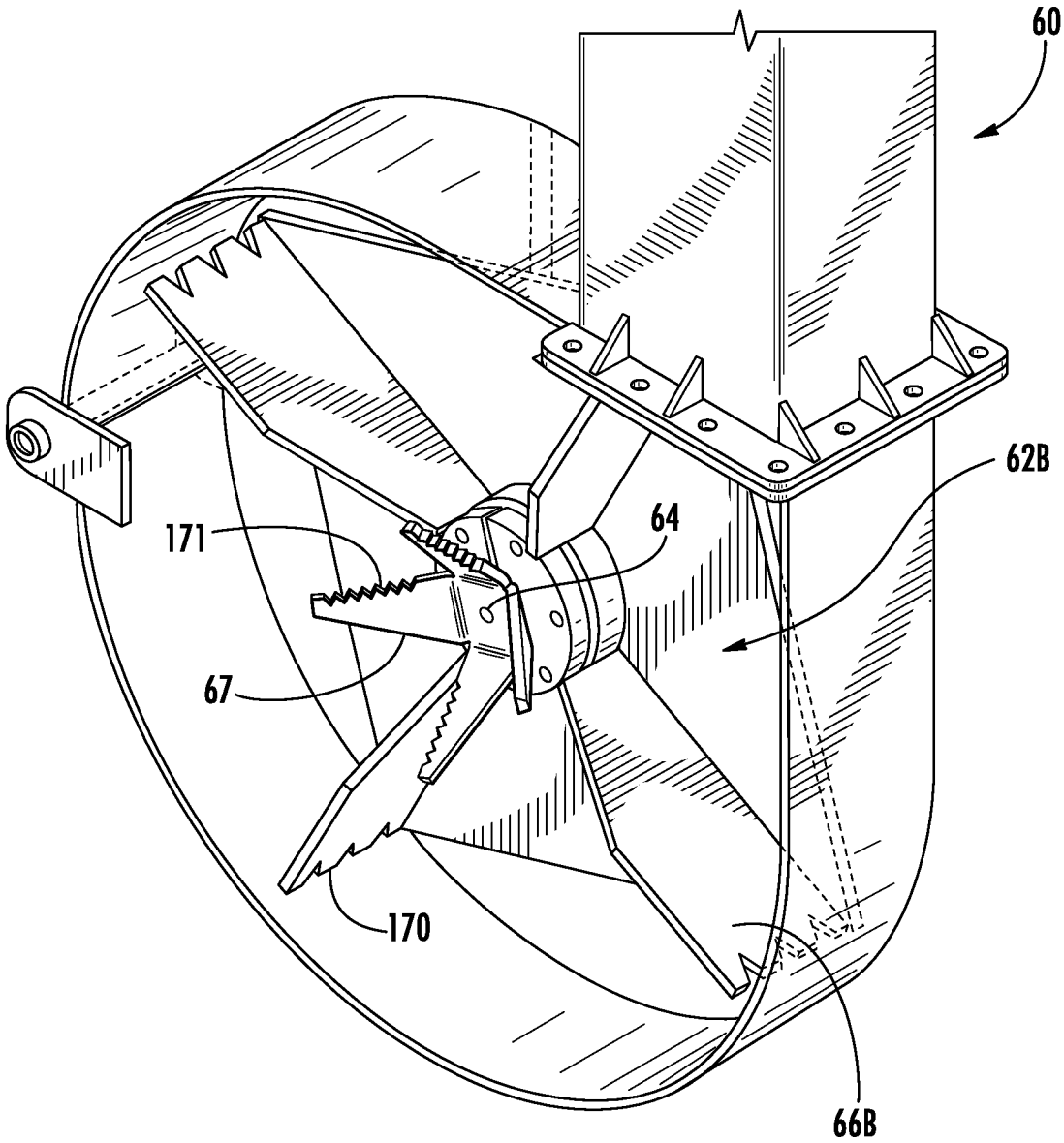

FIG. 6

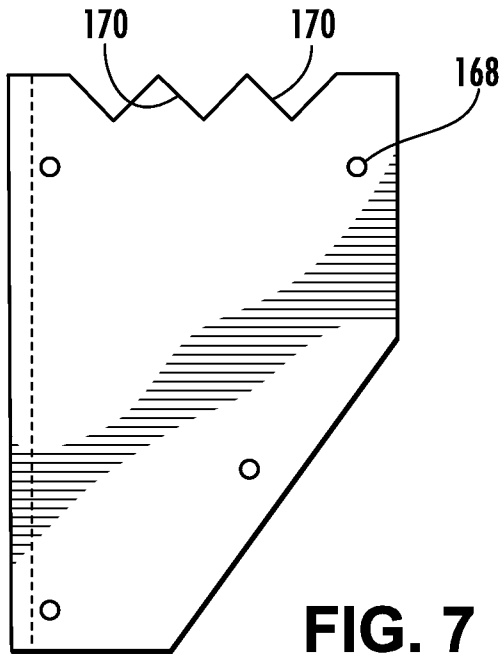

FIG. 7

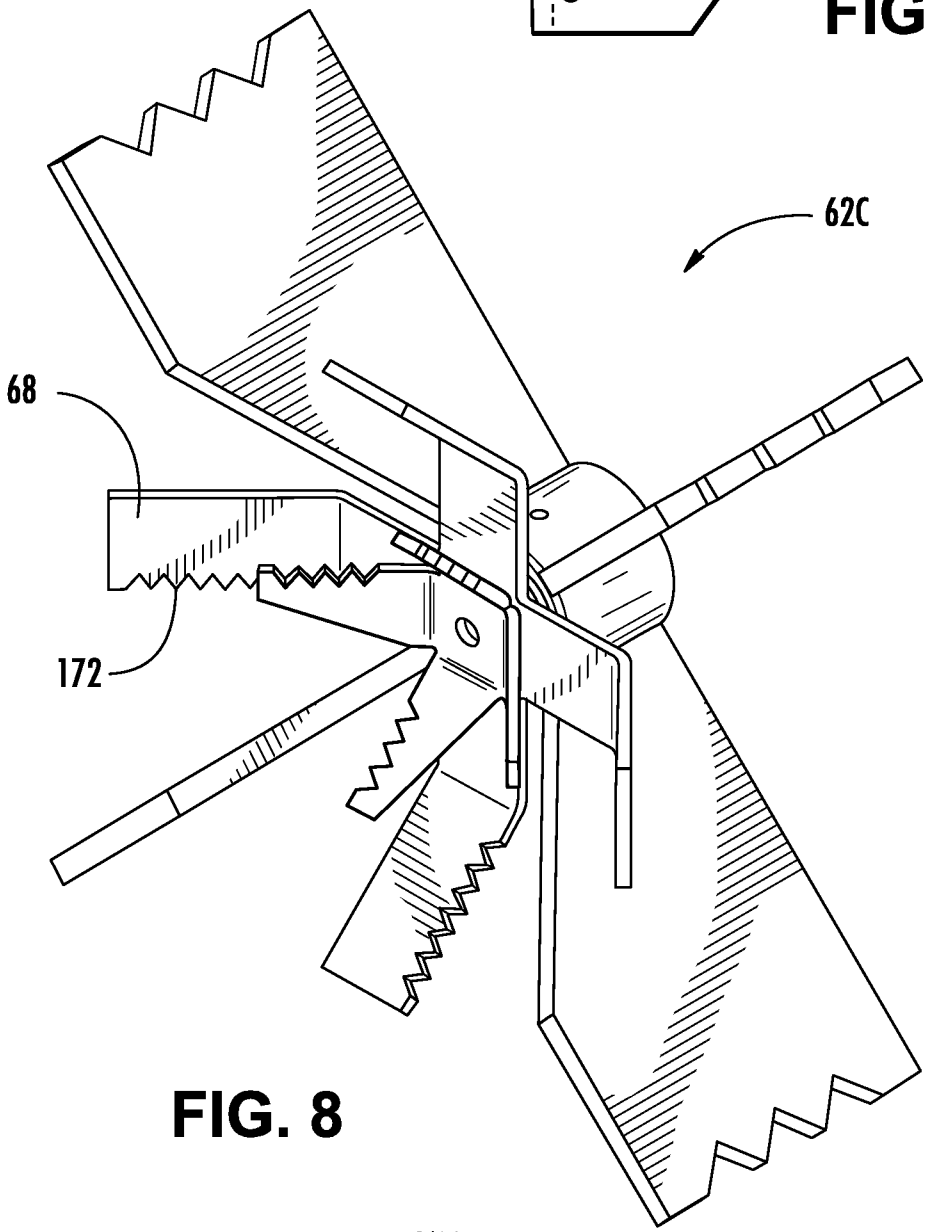

FIG. 8

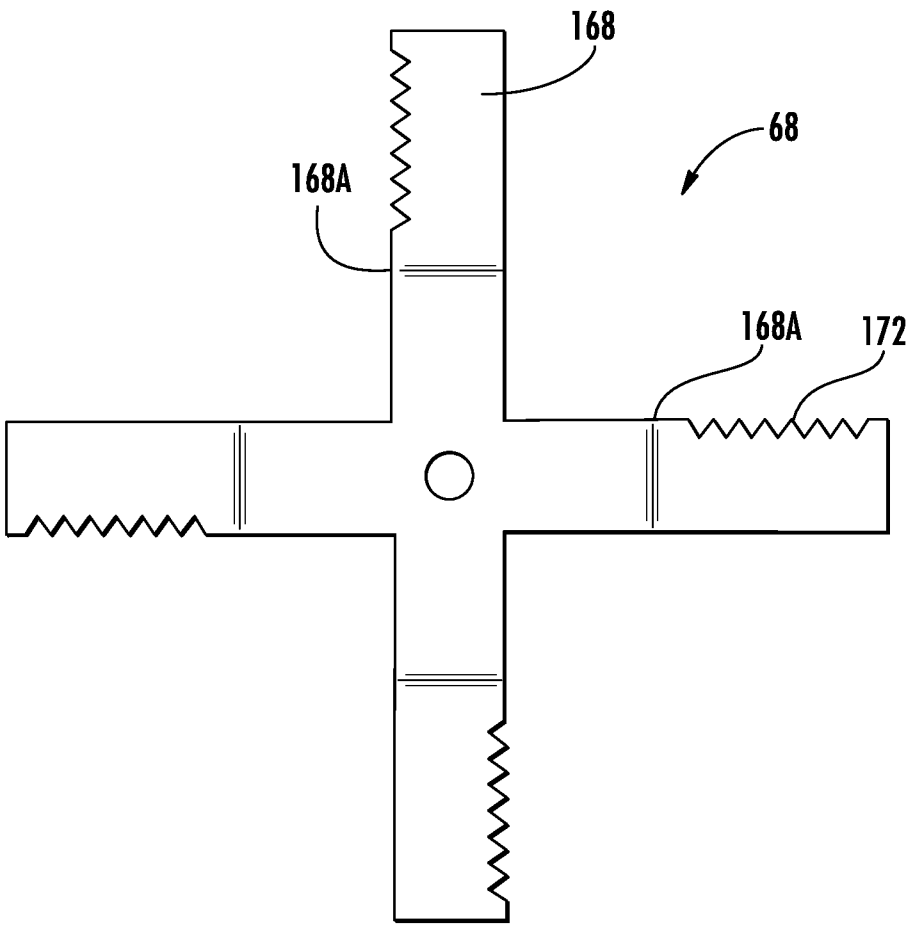

FIG. 9

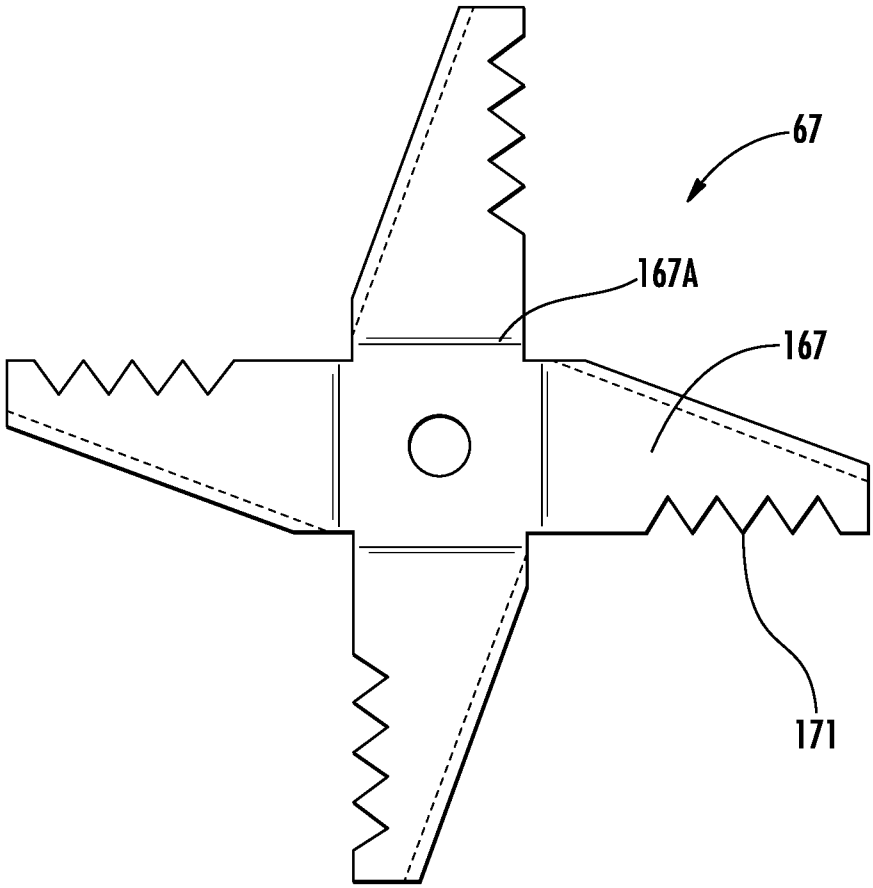

FIG. 10

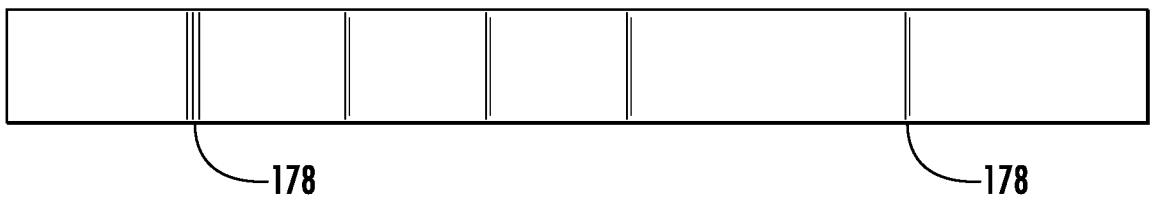

FIG. 11

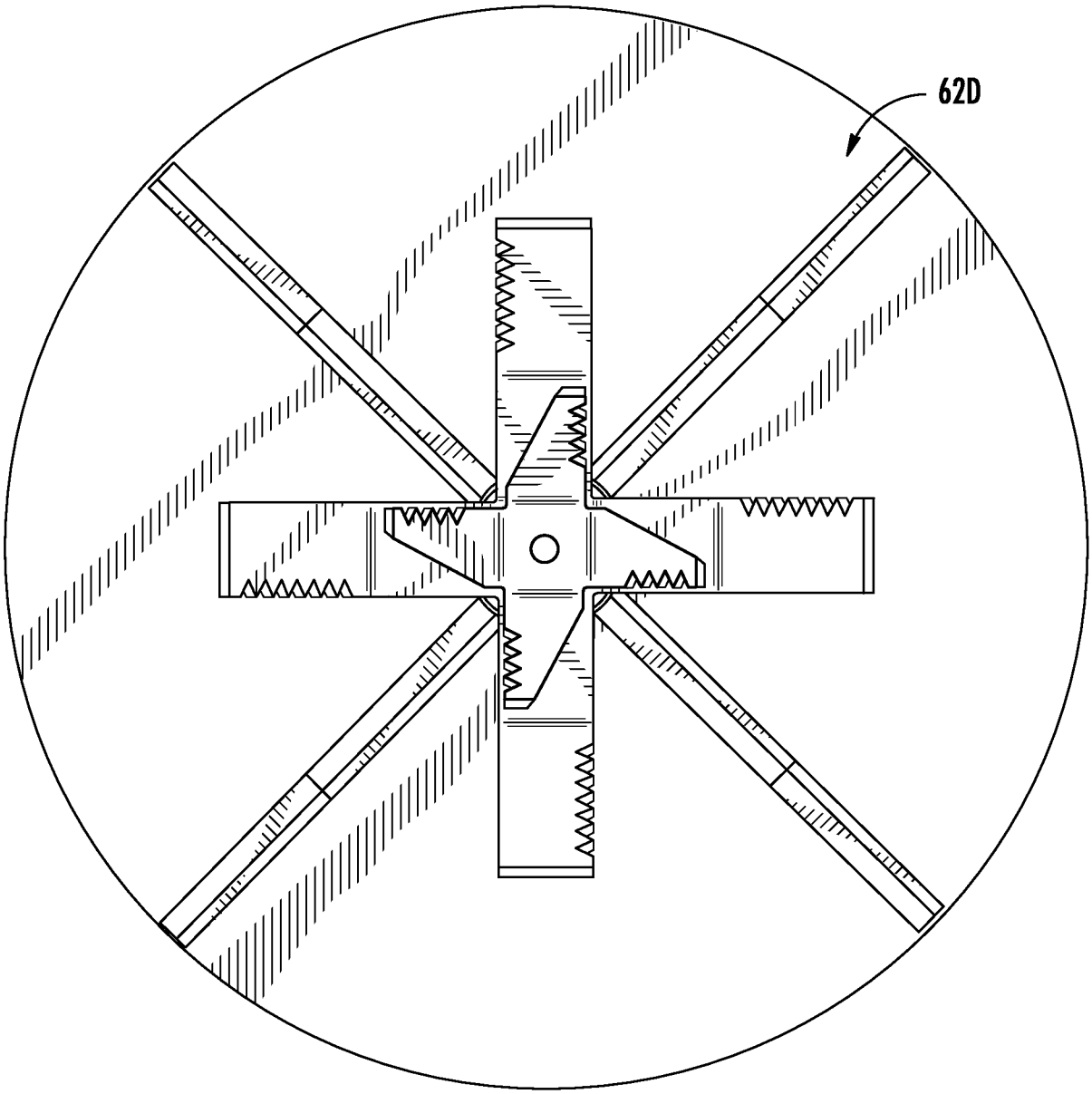

FIG. 12

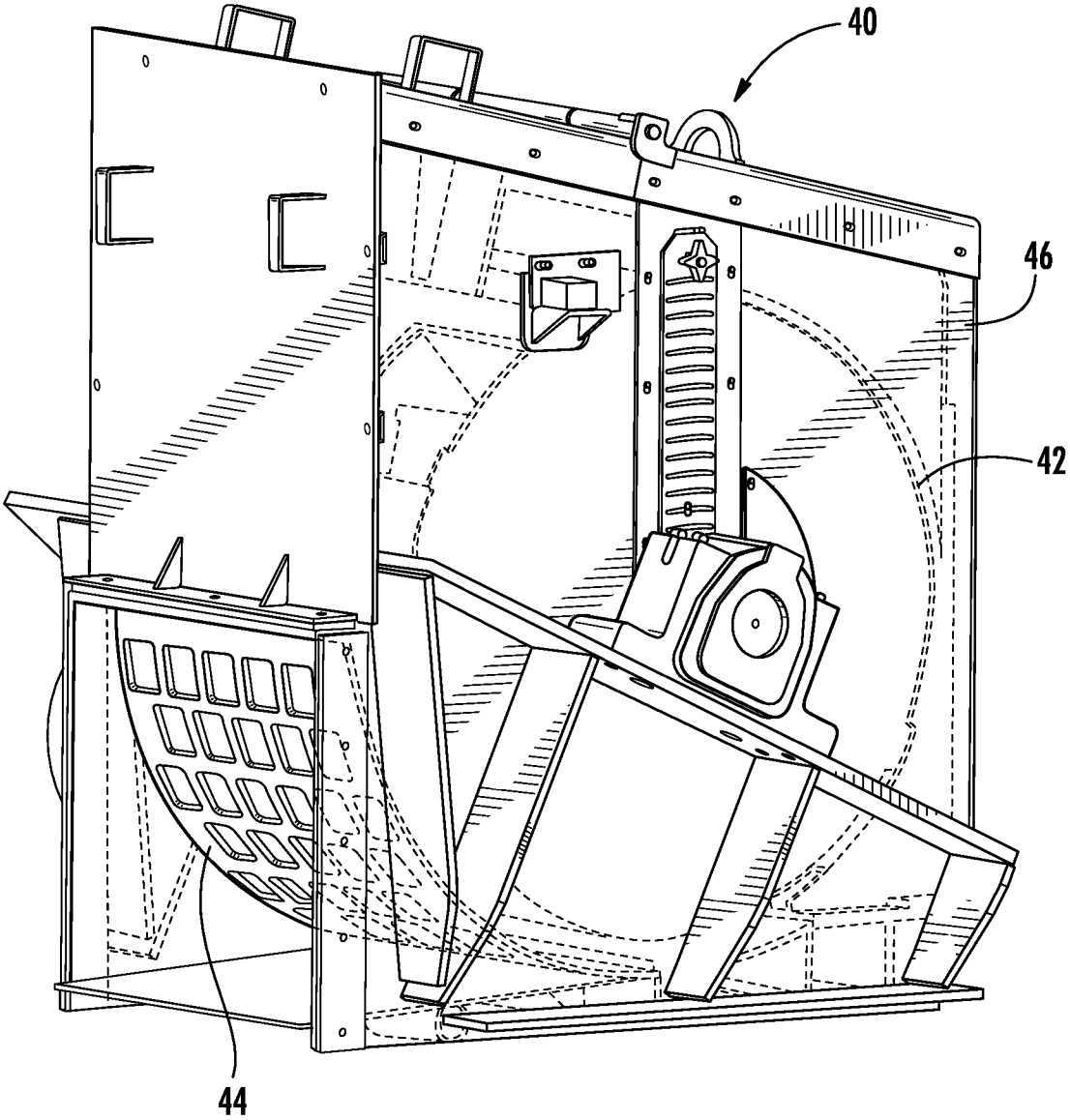

FIG. 13

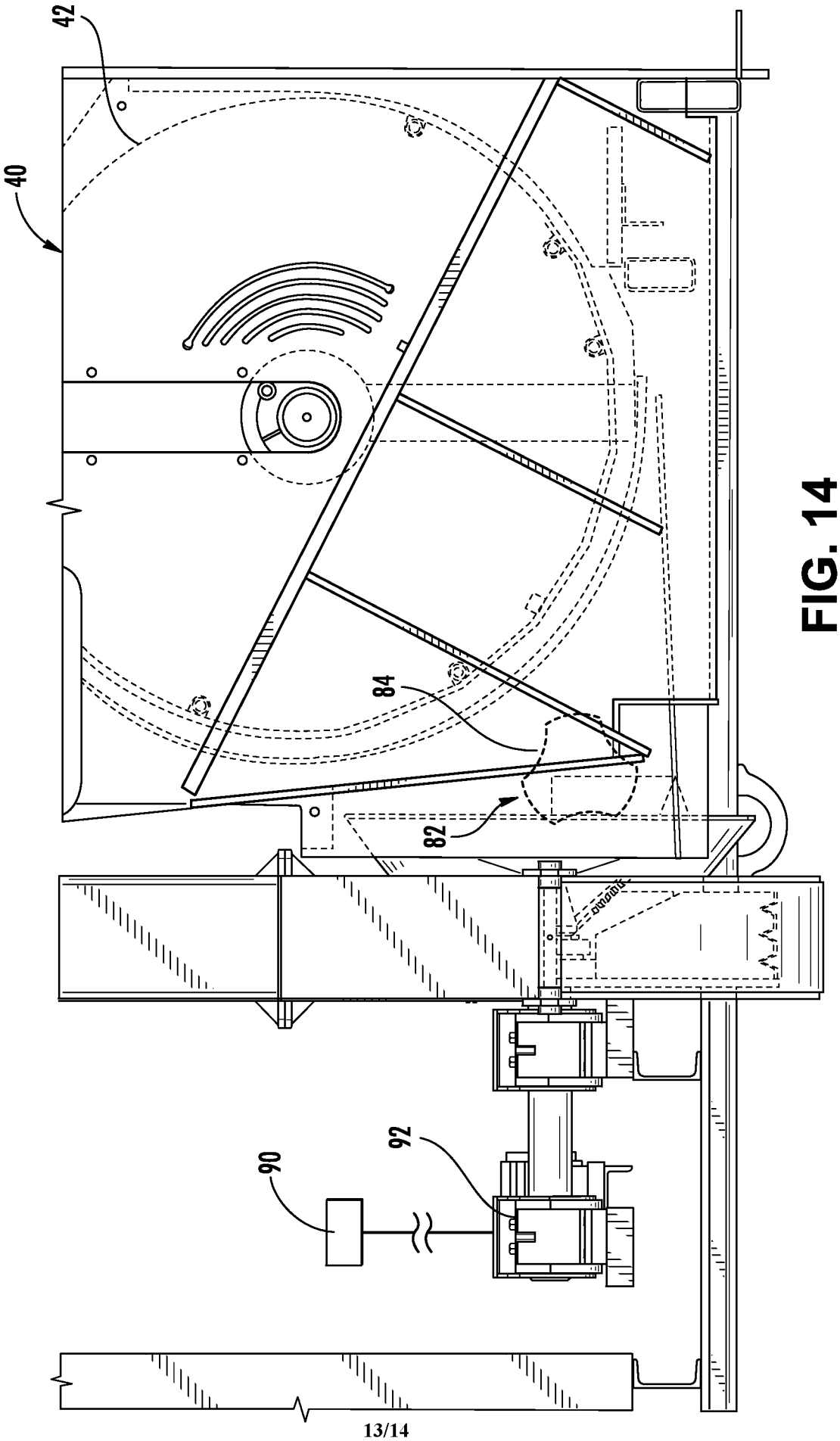

FIG. 14

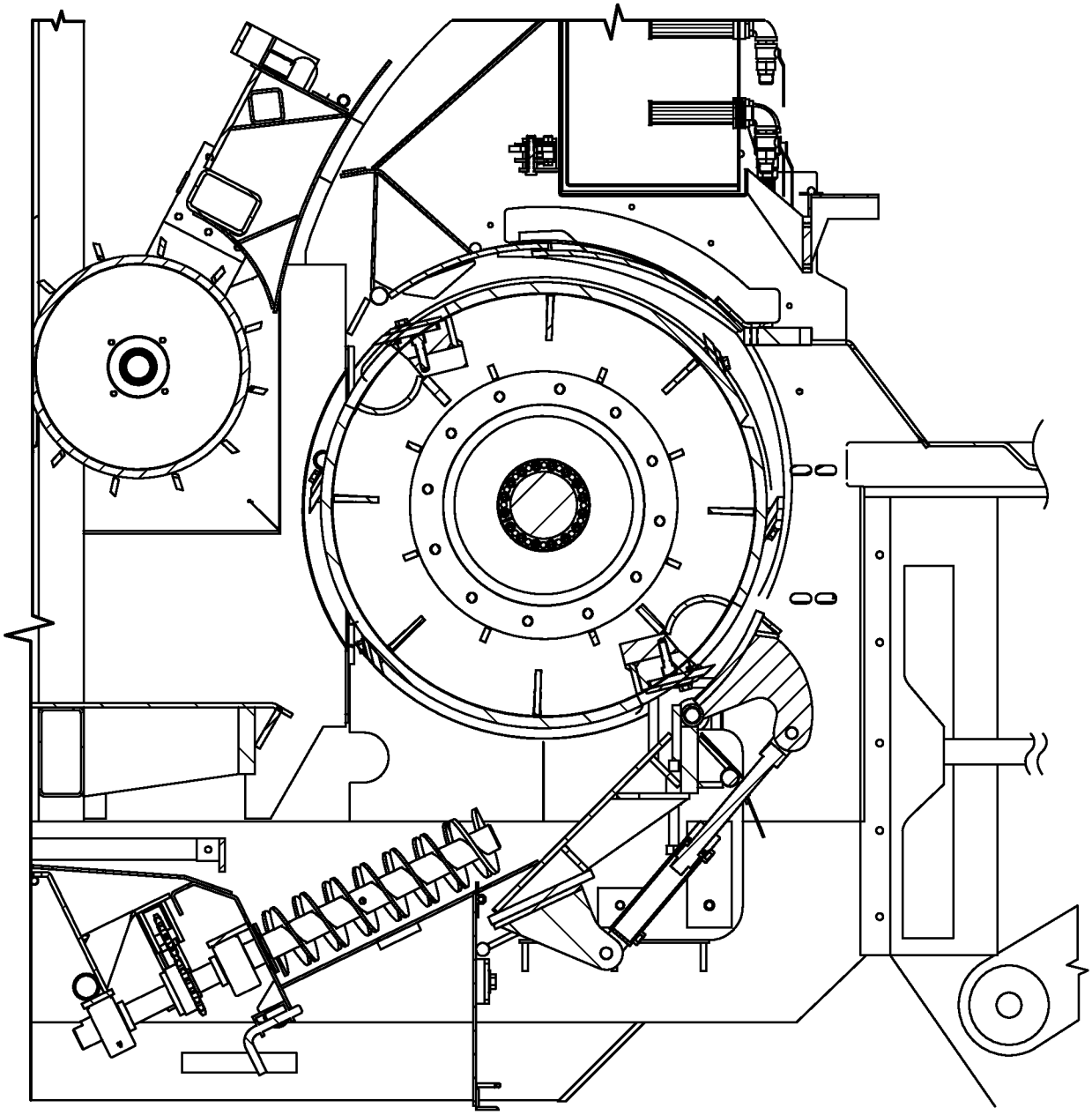

FIG. 15

INTERNATIONAL SEARCH REPORT

International application No.
PCT/US2013/046054

A. CLASSIFICATION OF SUBJECT MATTER
IPC(8) - B02C 18/00 (2013.01)
USPC - 241/28
According to International Patent Classification (IPC) or to both national classification and IPC

B. FIELDS SEARCHED

Minimum documentation searched (classification system followed by classification symbols)
IPC(8) - A01G 3/00; B02C 18/00; B27L 11/00 (2013.01)
USPC - 144/373; 241/28, 50, 73, 101.71, 185.5, 190, 191, 197, 273.3, 277, 291, 295

Documentation searched other than minimum documentation to the extent that such documents are included in the fields searched
CPC - A01G 3/002; B02C 18/0084; B27L 11/00 (2013.01)

Electronic data base consulted during the international search (name of data base and, where practicable, search terms used)
PatBase, Google Patents

C. DOCUMENTS CONSIDERED TO BE RELEVANT

Category*	Citation of document, with indication, where appropriate, of the relevant passages	Relevant to claim No.
X	US 2,869,793 A (MONTGOMERY) 20 January 1959 (20.01.1959) entire document	1-6, 25
Y		7-24
Y	US 5,362,004 A (BATEMAN) 08 November 1994 (08.11.1994) entire document	7-24
Y	US 1,558,613 A (HOLLAND-LETZ et al) 27 October 1925 (27.10.1925) entire document	10-11
Y	US 5,240,188 A (WHITMIRE) 31 August 1993 (31.08.1993) entire document	20
Y	US 6,047,912 A (SMITH) 11 April 2000 (11.04.2000) entire document	22-24

☐ Further documents are listed in the continuation of Box C. ☐

* Special categories of cited documents:
"A" document defining the general state of the art which is not considered to be of particular relevance
"E" earlier application or patent but published on or after the international filing date
"L" document which may throw doubts on priority claim(s) or which is cited to establish the publication date of another citation or other special reason (as specified)
"O" document referring to an oral disclosure, use, exhibition or other means
"P" document published prior to the international filing date but later than the priority date claimed
"T" later document published after the international filing date or priority date and not in conflict with the application but cited to understand the principle or theory underlying the invention
"X" document of particular relevance; the claimed invention cannot be considered novel or cannot be considered to involve an inventive step when the document is taken alone
"Y" document of particular relevance; the claimed invention cannot be considered to involve an inventive step when the document is combined with one or more other such documents, such combination being obvious to a person skilled in the art
"&" document member of the same patent family

Date of the actual completion of the international search	Date of mailing of the international search report
11 November 2013	20 NOV 2013

Name and mailing address of the ISA/US	Authorized officer:
Mail Stop PCT, Attn: ISA/US, Commissioner for Patents P.O. Box 1450, Alexandria, Virginia 22313-1450 Facsimile No. 571-273-3201	Blaine R. Copenheaver PCT Helpdesk: 571-272-4300 PCT OSP: 571-272-7774