Dec. 8, 1964 S. RUBINSTEIN 3,160,871

TAP-PROOF SECURITY COMMUNICATIONS CABLE

Filed April 2, 1962 2 Sheets-Sheet 1

Fig. 1

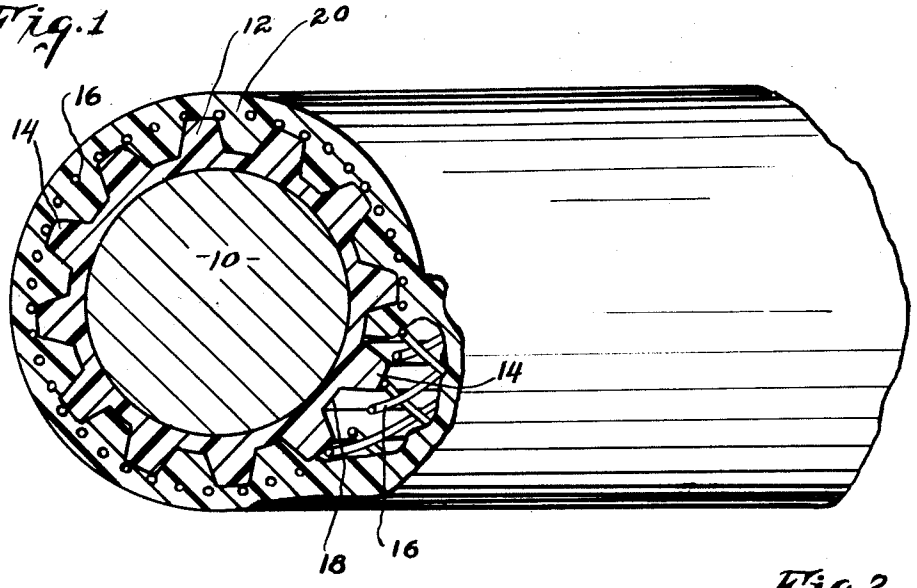

Fig. 2

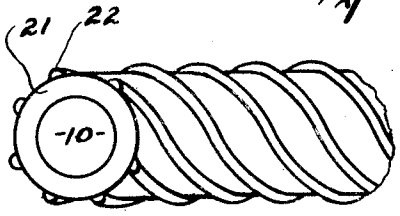

Fig. 5

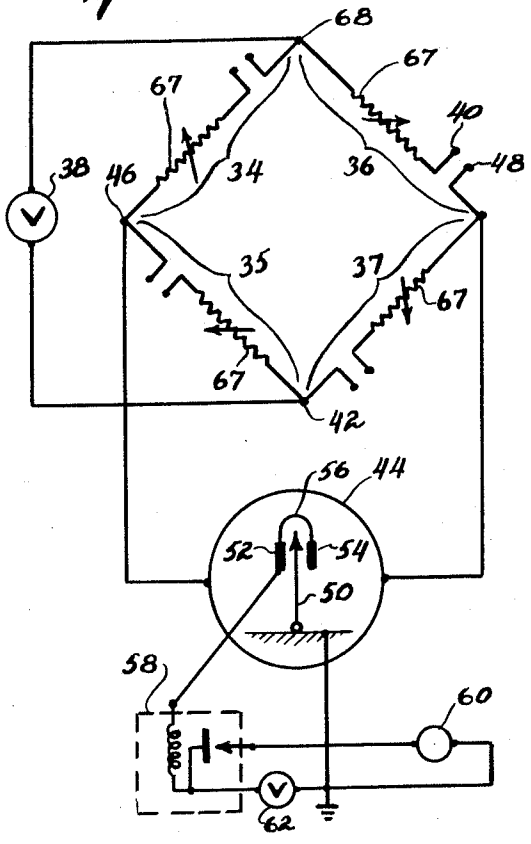

Fig. 3

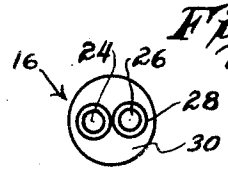

Fig. 4

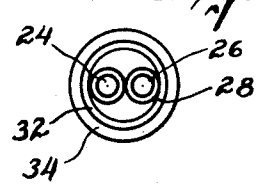

INVENTOR.
SOLOMON RUBINSTEIN
BY
Emery Whittemore Sandoe & Graham
ATTORNEYS

Dec. 8, 1964 S. RUBINSTEIN 3,160,871

TAP-PROOF SECURITY COMMUNICATIONS CABLE

Filed April 2, 1962 2 Sheets-Sheet 2

Fig. 6

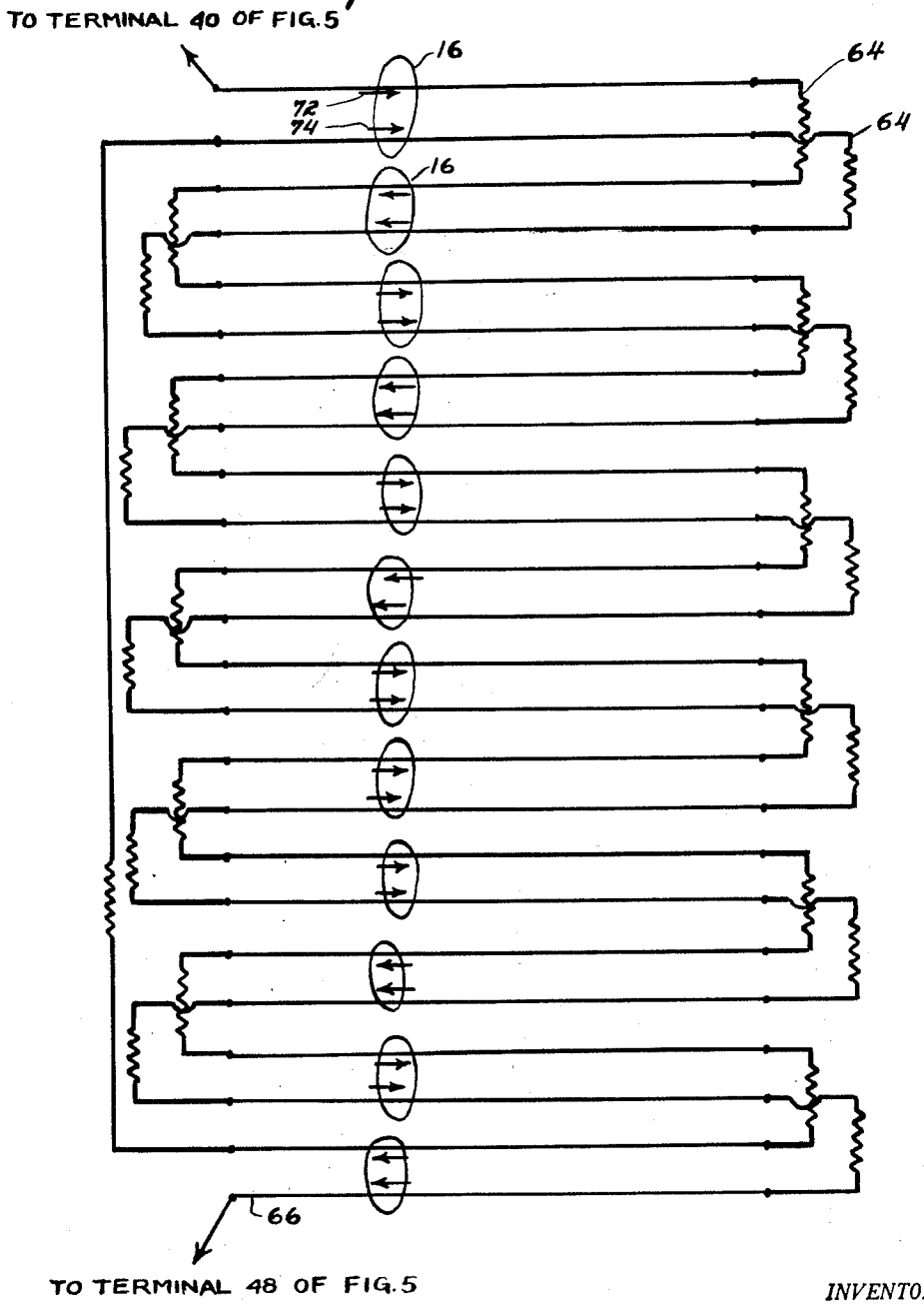

INVENTOR.
SOLOMON RUBINSTEIN

BY

ATTORNEYS

United States Patent Office 3,160,871 Patented Dec. 8, 1964

3,160,871

TAP-PROOF SECURITY COMMUNICATIONS CABLE

Solomon Rubinstein, Fanwood, N.J., assignor to General Cable Corporation, New York, N.Y., a corporation of New Jersey

Filed Apr. 2, 1962, Ser. No. 184,209
8 Claims. (Cl. 340—285)

This invention relates to communications cables and more particularly to communications cable having means for the detection of attempts to tap the cable.

Communications cables which provide means for detection of tapping thereof are necessary in many communications applications. While many cables of this type are known to the art, none offers the requisite security against tapping. Most of those cables known to the art prevent direct entry into the cable core as, for example, by a probe. However, in these cables it is relatively easy to strip or peel back the outer jacketing covering, alarm wires or tapes, to bridge a part of such wires or tapes and, after bridging the alarm wires or tapes, to cut into the cable. The bridged alarm wires or tapes are electrically bypassed and thus do not trigger the alarm circuits.

It is, therefore, one object of this invention to provide a security cable construction offering a high degree of resistance to tapping of the cable.

In accordance with this object, there is provided, in a preferred embodiment of this invention, a security cable comprising a cable core and an inner jacket extruded thereover. The outer surface of the inner jacket is provided with a ribbed surface. A braid of carriers is applied over the ribbed surface and an outer jacket extruded over the braid. Due to the ribbed outer surface of the inner jacket, the outer jacket extrusion will penetrate into the valleys between ribs, thereby to encase the wire braid completely in the outer jacket material.

The wire braid is formed of a plurality of carriers, each of which consists of a twisted assembly of wires. Each wire is insulated with conventional magnet wire enamel and the wires are twisted with a very short lay.

The wires are serially connected and coupled together as the four arms of a balanced bridge circuit. Thus, changes in total resistance of the serially coupled protective wire braid caused by shorting together of wires or by breaking or cutting one of the wires in the bridge circuit will trigger the alarm.

Since the braid is imbedded in the outer jacket, the inside surface of which corresponds to the ribbed outer surface of the inner jacket, any attempt to expose the inner jacket by stripping back of the outer jacket will induce stresses in the twisted pairs of the braid which will either break the wire or break the enamel insulation thereon, tripping the alarm circuit. Removal of the outer jacket without damaging the enamel insulation is a time consuming and hazardous task. By coupling wires as indicated in FIG. 6, the current will flow in the same direction in each wire of each twisted pair. Thus, tracing of individual wires in each twisted pair by electrical means is difficult and hazardous since current tracing cannot be used. Voltage tracing must be used and can only be done by probing the conductor of each wire in the braid.

Having briefly described this invention, it will be described in greater detail thereof in the following detailed description which may best be understood by reference to the accompanying drawings, of which:

FIG. 1 is a partially broken away perspective view of a cable constructed in accordance with the present invention;

FIG. 2 is a perspective view of an alternative construction of the inner jacket shown in FIG. 1;

FIG. 3 is a cross section view of the braid carriers to an enlarged scale;

FIG. 4 is a cross section view of another embodiment of the carrier shown in FIG. 3;

FIG. 5 is a schematic diagram of the detector circuit used with the cable of FIG. 1;

FIG. 6 is a circuit diagram showing the interconnections of the braid carriers for one arm of the bridge in a typical cable installation.

In FIG. 1 there is shown a security cable comprising a cable core 10. The cable core components will, of course, vary with the application intended and the core is not illustrated in detail since it does not form an essential portion of the present invention. It will be understood, however, that the cable core may consist of the conductor components as well as the necessary shielding, which may include shielding to prevent inductive tapping of the core components.

An inner jacket 12 is extruded over the core. The inner jacket may be formed of conventional jacketing materials such as polyethylene or polyvinyl chloride. The outer surface of the inner jacket is ribbed. The ribs may conveniently be made integral with the jacket by the nozzle configuration of the jacket extruder to apply axially extending, radially protruding ribs 14.

A plurality of carriers 16 are braided over the inner jacket. The braid lay is selected so that the braid will span the valleys 18 between adjacent ribs 14.

An outer jacket 20 is extruded over the braid. The outer jacket may be formed of conventional jacketing materials such as neoprene, polyethylene or polyvinyl chloride. As the outer jacket is extruded over the braid, the jacket compound will flow through the open braid into the valleys 18 between ribs 14 thereby to completely imbed the carriers 16 in the jacket material.

Instead of axially extending ribs, spiral tangentially extending ribs may be applied to the inner core as shown in FIG. 2.

In FIG. 2, there is shown the cable core 10, an inner jacket 21 extruded with a smooth outer wall, and spiral ribs 22 formed thereon by wrapping a plurality of heavy cords or heavy plastic or rubber monofilaments in open spirals over the inner jacket. The braid is then applied over the spiral ribs and an outer jacket extruded over the braid to imbed the braid in the outer jacket extrusion material as explained in connection with FIG. 1.

Each carrier in the braid is formed of twisted magnet wires as shown in FIG. 3.

In FIG. 3, there is shown a cross section view of a carrier 16 shown in FIG. 1. The carrier consists of wires 24 and 26, each of which is conventional magnet wire having a thin enamel insulation 28 applied thereover. The insulation 28 may be conventional magnet wire enamel, such as a varnish based on a vinyl acetate resin, polyamide or polyester resin. The wires are twisted together with a short lay and the twisted wires are bonded with an insulation 30 which may conveniently be the same enamel as used on the individual wires.

The carrier may, of course, be formed of more than two wires, but two wires are necessary for each carrier.

Alternatively, each carrier may be formed as shown in FIG. 4, which shows the wires 24 and 26 with the enamel insulation 28 thereover. After twisting of two or more wires together with a short lay, a full-coverage wrap or braid of synthetic yarn 32 (such as polyester or nylon type) is applied over the twisted wire and a magnet wire enamel 34 applied thereover. The assembly is then baked, resulting in a fusing of the yarn to the twisted wire assembly, which fusing renders access to each wire of the carrier extremely difficult without disturbance of the electrical insulation between individual wires.

In the construction shown in FIGS. 1–4, the braid encases the cable core. Entry into the cable by cutting the jackets will interrupt the electrical continuity by severing one or more of the braid wires. The ribbed construction of the outer surface of the inner jacket (which is matched by the inner surface of the outer jacket) coupled with the imbedding of the braid in the outer jacket, results in the application of high stresses to the braid if an attempt is made to peel back the outer jacket. The high stresses will either break the individual wires or will break the insulation film between adjacent wires. In either case, by detecting changes in electrical continuity and resistance, an alarm circuit may be triggered.

A suitable circuit for such detection is shown in FIG. 5 which comprises a bridge circuit having arms 34, 35, 36 and 37 connected in a standard impedance bridge arrangement. Each of the four equal arms 36, 37, 35 and 34 are formed by serially connecting all wires of one quarter of the carriers with equal coupling resistors 64 and a trimmer resistor 67. A voltage from a source 38 is applied across terminals 68 and 42 and a detector 44 is coupled across terminals 46, 48 of the bridge. The detector comprises a galvanometer movement instrument having an indicator contact 50 which will contact electrode 52 or electrode 54 which are serially coupled by lead 56 whenever the resistance in arm 36, 37, 35 or 34 changes either positively or negatively from its initial wire resistance by adjustment of trimmer resistances 67. Closure of the switch contact will trip relay 58 to sound alarm bell 60 by completing the circuit through a voltage source 62. In place of a bell, other indicators may be used in manner known to the art.

The coupling of the wires of the braid for each arm of the bridge circuit is shown in FIG. 6 for a typical security cable installation which consists of forty-eight carriers 16. The end of one wire in any one carrier is connected to terminal 40 of FIG. 5. Adjacent wires are then coupled together by coupling resistors 64 proceeding around the periphery of the cable. The end of the last wire 66 of one-quarter of the braid carriers is then coupled to terminal 48 of the bridge of FIG. 5. Thus, the resistance between terminals 40 and 48 is the summation of the D.C. resistance of one-quarter of the total number of braid wires for the length of the installed cable, plus the resistance of the coupling resistors.

Although the serial connection of all wires may be achieved by random serial coupling of the wires in each carrier, I prefer the electrical connection shown in FIG. 6 for the reason that the current in the bridge circuit flows in the same direction in each wire of each carrier as indicated by arrows 72 and 74. Mechanical tracing of a single conductor in a twisted pair is, of course, extremely difficult. When the electrical current flows in the same direction in each wire of the twisted pair, electrical tracing of each wire is made more difficult, since voltage, rather than current tracing, must be done.

Alternatively, all wires of the braid may be serially coupled and used as one arm of a bridge formed with balancing resistors in the other arms.

This invention may be variously embodied and modified within the scope of the subjoined claims.

What is claimed is:

1. A security cable comprising a cable core, an outer extruded jacket of polymeric material surrounding the cable core, an open wire braid which also surrounds the core and is completely imbedded within the jacket, said wire braid being formed of a plurality of carriers each of which comprises at least two insulated wires twisted together in a short lay and restrained against separation from each other.

2. A security cable in accordance with claim 1 in which the assembled wires of a carrier are provided with a coating of wire enamel.

3. A security cable in accordance with claim 1 in which the wires of a carrier are individually insulated with a magnet wire enamel and in which the assembled wires of a carrier are bonded together with a magnet wire enamel.

4. A security cable comprising a cable core, an inner jacket extruded over said core, the outer surface of said inner jacket being provided with ribs, a wire braid over said inner jacket, the said braid comprising a plurality of carriers each of which comprises a pair of insulated magnet wires twisted together in a short lay, and an outer jacket extruded over said braid, said outer jacket having an inner surface conforming to the ribbed outer surface of the inner jacket, said braid being imbedded in said outer jacket.

5. Apparatus for detecting attempts to tap the conductors of a communications cable comprising, in combination, a security cable comprising a cable core, an outer extruded jacket of polymeric material surrounding the cable core, an open wire braid which also surrounds the core and is completely imbedded within the jacket, said wire braid being formed of a plurality of carriers each of which comprises at least two insulated wires twisted together in a short lay and restrained against separation from each other, and a bridge circuit, each arm of which includes a plurality of the carrier wires connected in series, the bridge circuit including an alarm which will be activated by a change in the electrical resistance of any arm.

6. Apparatus in accordance with claim 5 in which the carrier conductors are connected so that current will flow in the twisted conductors of a carrier in the same direction with a voltage difference between the twisted conductors of the pair.

7. Apparatus in accordance with claim 5 in which one wire of each twisted pair of the carriers connected in one arm of the bridge circuit is connected in series with one wire of another of said twisted pairs, and in which these serially connected wires are in turn connected in series with the other wires of each of said twisted pairs so that current will flow in the same direction through both wires of a twisted pair.

8. Apparatus in accordance with claim 7 in which the connections between the wires of the twisted pairs include coupling resistors.

References Cited by the Examiner

UNITED STATES PATENTS

961,827	6/10	Williams	340—276
1,920,742	8/33	Chapman et al.	340—276
2,060,215	11/36	Hopkins et al.	340—285
2,364,994	12/44	Moore	340—261
2,869,076	1/59	Evans et al.	324—51
2,912,600	11/59	Isenberg	340—276
2,964,701	12/60	Argabright	324—51

FOREIGN PATENTS

1,075,180	2/60	Germany.
250,873	4/26	Great Britain.

NEIL C. READ, *Primary Examiner.*