No. 717,275.

Patented Dec. 30, 1902.

E. T. REED.

ERASURE PLATE FOR TYPE WRITING MACHINES.

(Application filed May 21, 1902.)

(No Model.)

Fig. 1

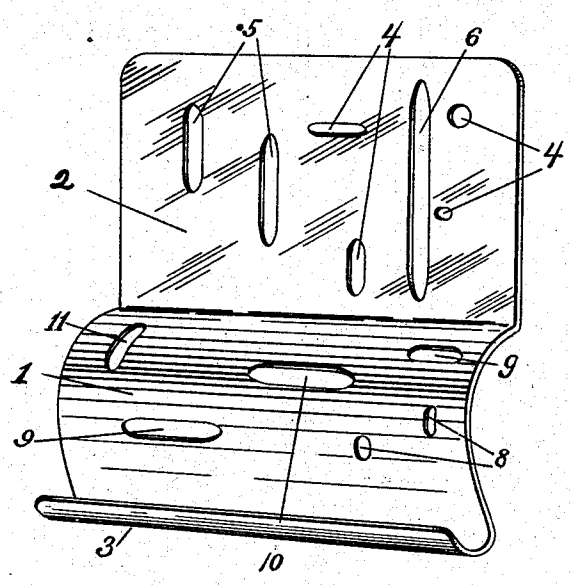

Fig. 2

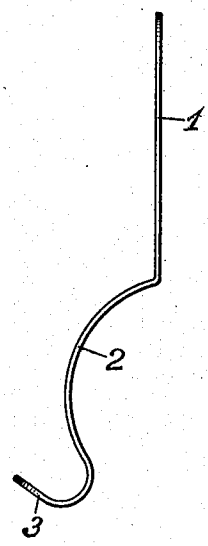

Witnesses
Conrad Kremp
Leon M. Prince

Ellen T. Reed
Inventor

By her Attorneys
Kenneson Cram Emily & Rubino

THE NORRIS PETERS CO., PHOTO-LITHO., WASHINGTON, D. C.

UNITED STATES PATENT OFFICE.

ELLEN T. REED, OF ST. JOHN, CANADA.

ERASURE-PLATE FOR TYPE-WRITING MACHINES.

SPECIFICATION forming part of Letters Patent No. 717,275, dated December 30, 1902.

Application filed May 21, 1902. Serial No. 108,418. (No model.)

To all whom it may concern:

Be it known that I, ELLEN T. REED, a subject of the King of Great Britain, residing in the city of St. John, in the Province of New Brunswick, Dominion of Canada, have invented certain new and useful Improvements in Erasure-Plates for Type-Writing Machines, of which the following is such a full, clear, and exact description as when taken with the drawings forming a part hereof will be sufficient to enable those skilled in the art to make and use the same.

My invention relates to erasure-plates adapted for use upon type-writing machines, and has for its object to produce an erasure-plate adapted for use upon that class of type-writing machines known as "visible-writing" machines, particularly visible writers of the front-strike type, such as the "Underwood."

The invention has for its further object to produce an erasure-plate for type-writing machines which will catch the fragments of paper removed by the eraser.

To these ends my invention consists in an eraser-plate having a curved perforated body adapted to surround or embrace the platen of a front-strike type-writing machine and which may be provided at its lower edge with a trough or receptacle for receiving the fragments produced by the erasure, the said trough being preferably an upturned lower edge integral with the plate.

In the accompanying drawings I have shown one form of construction in which my invention is embodied.

In the drawings, Figure I is a perspective view of the structure, and Fig. II is an edge view thereof.

In the drawings, 1 indicates the curved body portion of the erasure-plate, made of suitable sheet material, such as sheet-brass, and provided at the top with a projecting straight edge 2, formed integral therewith, and at the bottom with an integral upturned edge, forming a trough or receptacle 3. The straight or plane edge or portion 2 is formed with a series of apertures 4 5 6 7 of various sizes, but preferably of round and oval-ended shapes. The curved or bent portion 1 is likewise provided with apertures 8 9 10 11, which are also preferably of round or oval-ended shapes. The upturned integral lower edge or trough portion 3 is unperforated. The apertures of both portions of the plate are more numerous and uncover greater area on the right-hand portions thereof than on the left, being so located for the reason that in use the plate is ordinarily grasped in the left hand and the eraser manipulated by the right hand.

It will be observed that while the construction shown is particularly adapted for use upon the platens of front-strike visible-writing type-writing machines it is also adapted for use upon the platens of top-strike or under-strike machines as well; but it finds its special adaptation for front-strike machines, as hereinbefore stated.

The mode of using the device will be apparent to those skilled in the art to which the invention appertains and to type-writists in general, for it will be readily observed that the plane portion can be used for erasures either on the type-writing machine or when the paper is removed from the type-writing machine and that the curved portion will embrace the platen and the trough will catch the fragments of the paper rubbed off by the eraser. Thus the device may be used in connection with a front-strike machine and in connection with a bottom-strike machine when the carriage is raised, and in both cases the fragments will be caught in the trough.

Having described my invention, what I claim, and desire to secure by Letters Patent, is—

1. An erasure-shield, consisting of a plate having a bent, apertured body portion adapted to embrace the platen of a type-writer and provided at its lower portion with a trough or receptacle for receiving the fragments produced by the erasure.

2. An erasure-shield for type-writing machines, consisting of a plate having a bent, apertured body portion adapted to embrace the platen of a type-writer and integral therewith an upturned lower edge adapted to receive the fragments of paper rubbed off by the eraser.

3. An erasure-shield for type-writing machines, constituted by a plate having an ap-

ertured, bent body portion, having an imperforate receptacle for receiving the fragments produced by the erasure.

4. An erasure-shield for type-writing machines, comprising a plate having a bent, apertured body portion adapted to embrace the platen of a type-writing machine, a plane apertured portion integral with and projecting from the said curved portion and a receptacle or trough integral with and projecting from said body portion.

ELLEN T. REED.

Witnesses:
MABELLE C. FRENCH,
STEPHEN B. BUSTIN.