G. SCHLATTER.

DUMPING VEHICLE.

APPLICATION FILED JAN. 8, 1914.

1,123,391.

Patented Jan. 5, 1915.

6 SHEETS—SHEET 1.

Fig. 1.

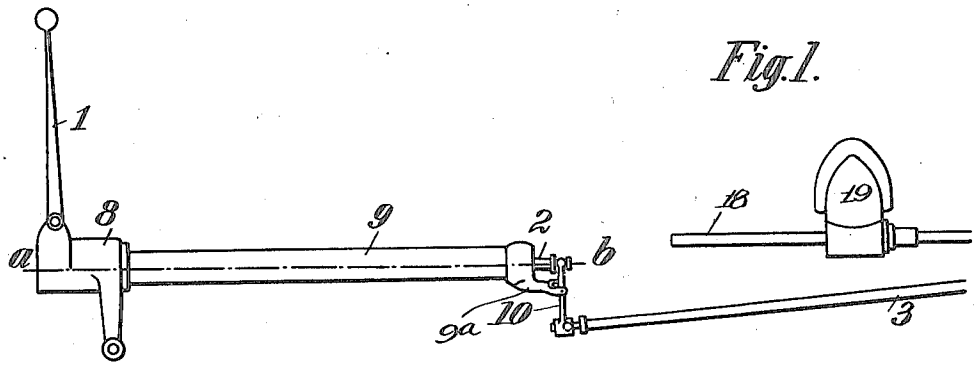

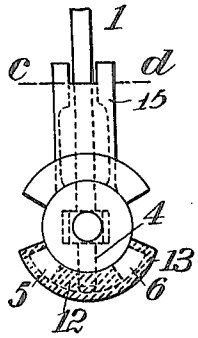

Fig. 3.

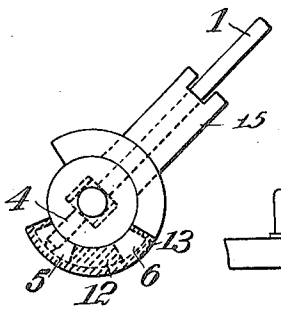

Fig. 4.

Fig. 2.

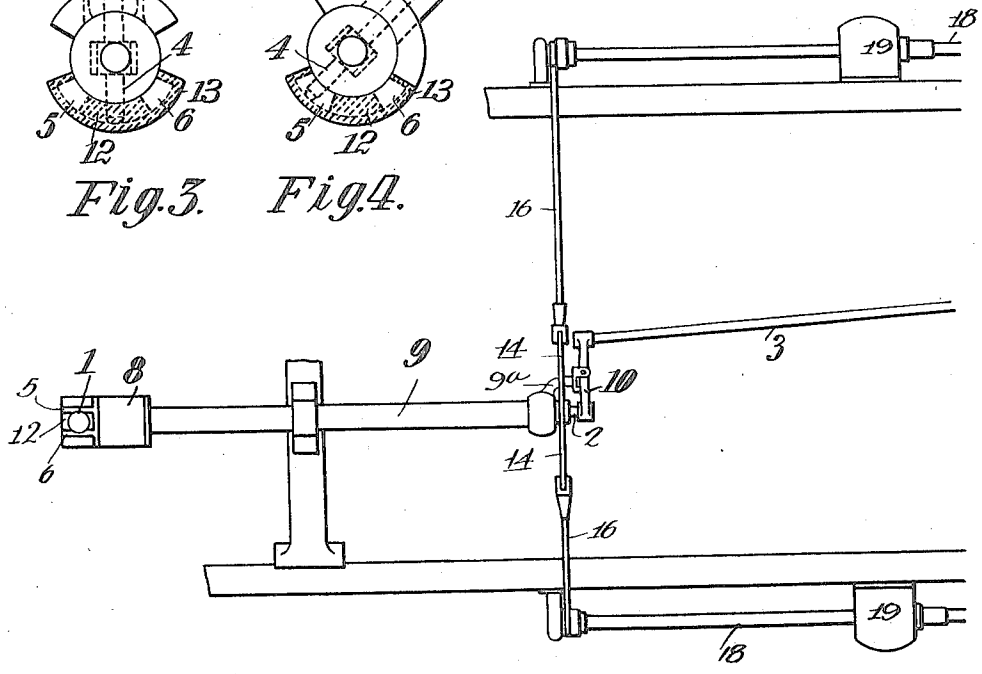

Witnesses:
E. Eckert.
M. J. L. Higgins.

Inventor
Gustav Schlatter.
By Henry Orth Jr. Atty.

G. SCHLATTER.

DUMPING VEHICLE.

APPLICATION FILED JAN. 8, 1914

1,123,391.

Patented Jan. 5, 1915.

6 SHEETS—SHEET 2.

Fig. 1a

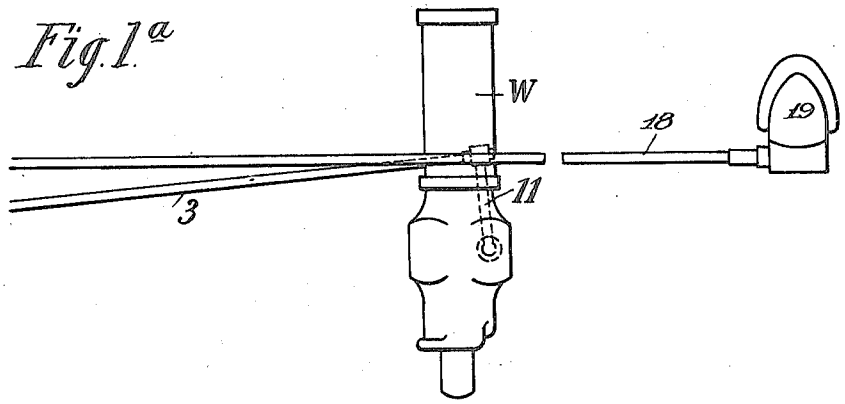

Fig. 2a

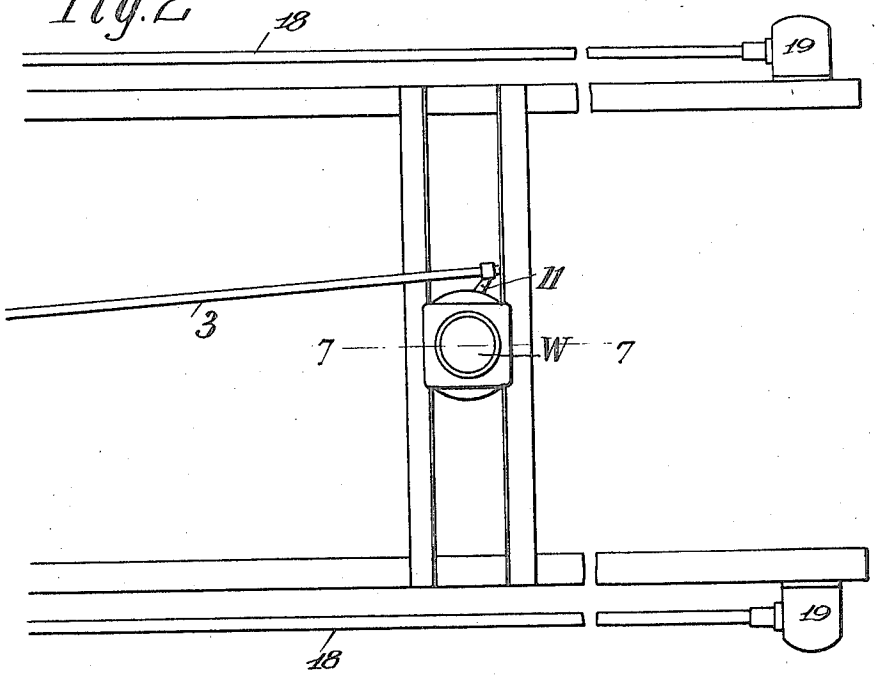

Witnesses
E. Leckert
M. J. L. Higgins.

Inventor
Gustav Schlatter,
By Henry O'Neill Jr. Atty.

G. SCHLATTER.

DUMPING VEHICLE.

APPLICATION FILED JAN. 8, 1914.

1,123,391.

Patented Jan. 5, 1915.

6 SHEETS—SHEET 3.

Fig. 5.

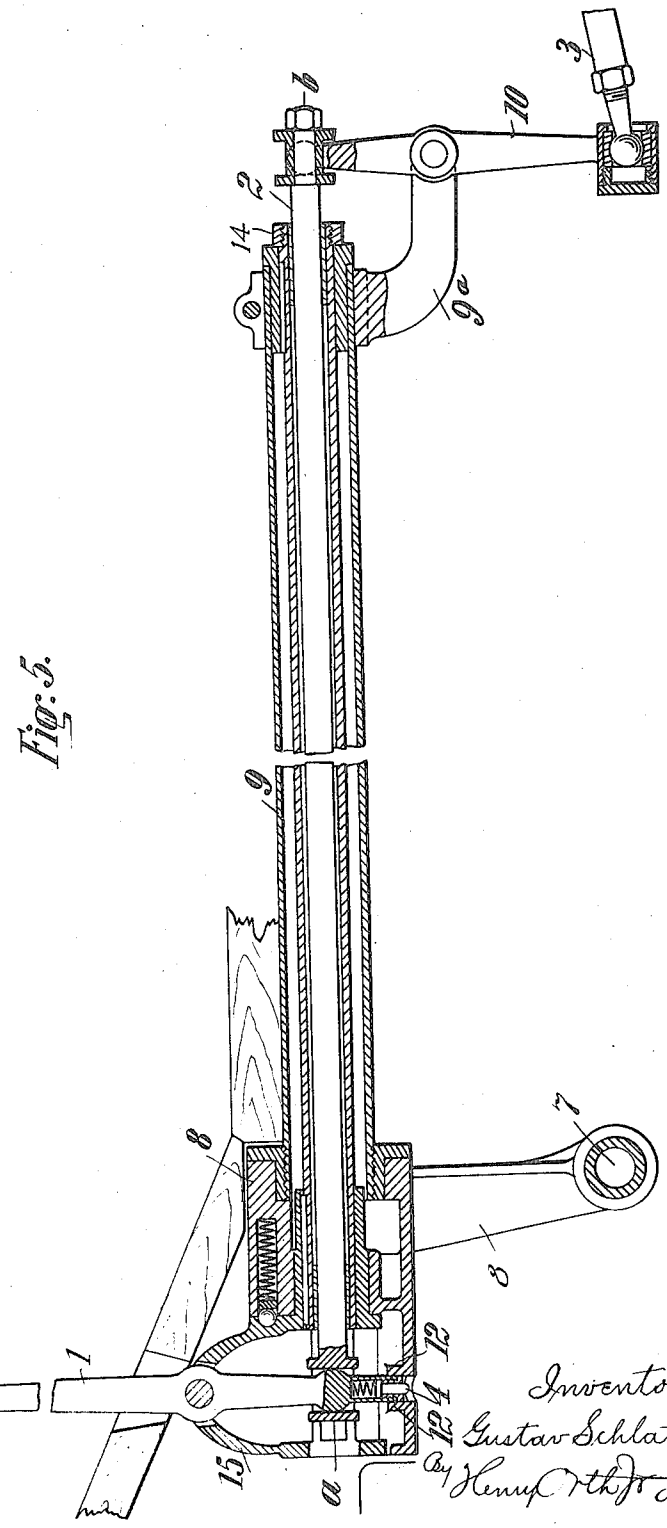

Witnesses:
E. Leckert
M. F. L. Hergams

Inventor
Gustav Schlatter
By Henry Orth & Co. atty.

G. SCHLATTER.

DUMPING VEHICLE.

APPLICATION FILED JAN. 8, 1914.

1,123,391.

Patented Jan. 5, 1915.

6 SHEETS—SHEET 4.

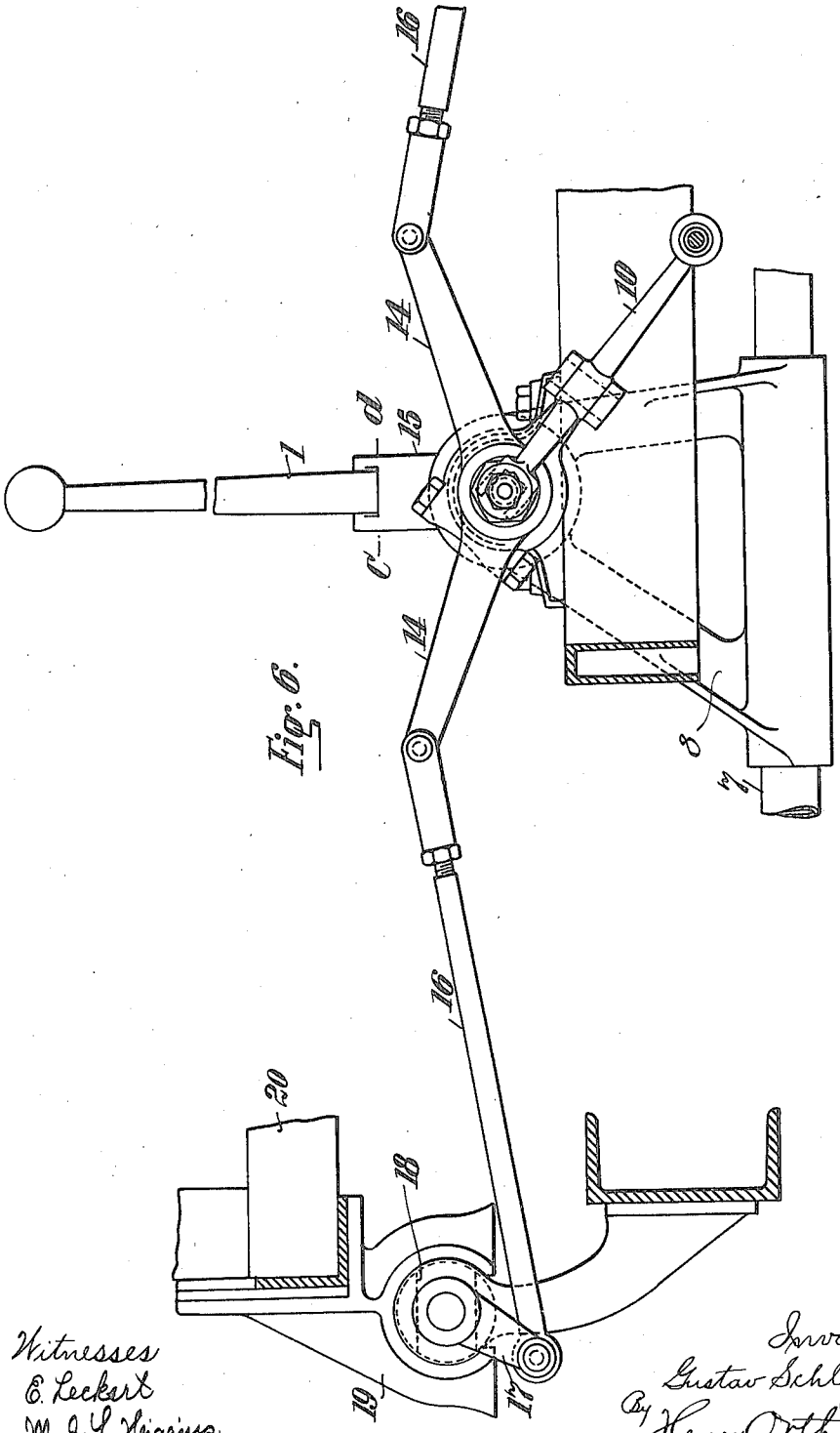

Fig. 6.

Witnesses
E. Leckart
M. J. L. Higgins.

Inventor
Gustav Schlatter,
By Henry Orth Jr atty.

G. SCHLATTER.

DUMPING VEHICLE.

APPLICATION FILED JAN. 8, 1914.

1,123,391.

Patented Jan. 5, 1915.

6 SHEETS—SHEET 5.

Fig. 7.

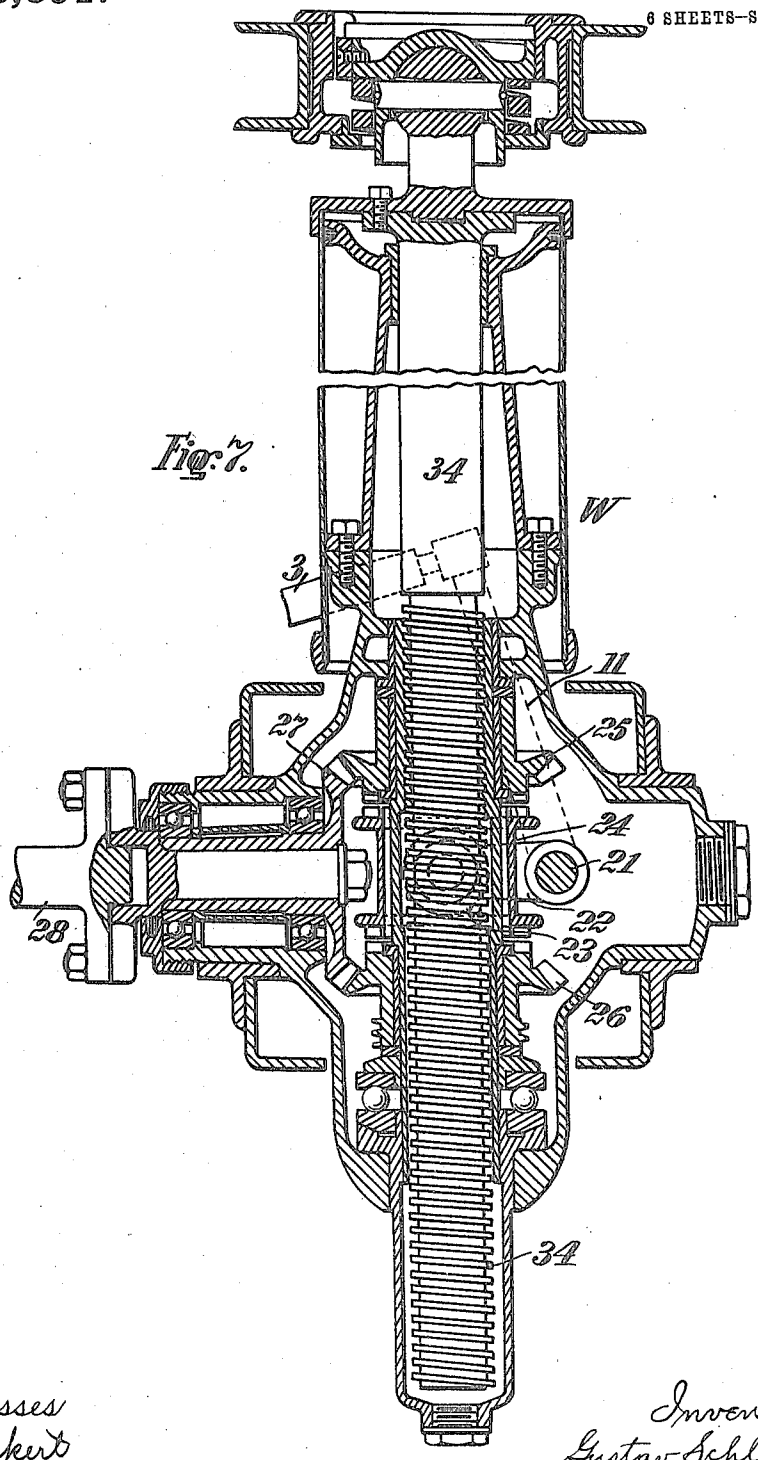

Witnesses
E. Leckert
M. J. L. Higgins.

Inventor.
Gustav Schlatter.
By Henry Orth & Co. Attys.

G. SCHLATTER.

DUMPING VEHICLE.

APPLICATION FILED JAN. 8, 1914.

1,123,391.

Patented Jan. 5, 1915.

6 SHEETS—SHEET 6.

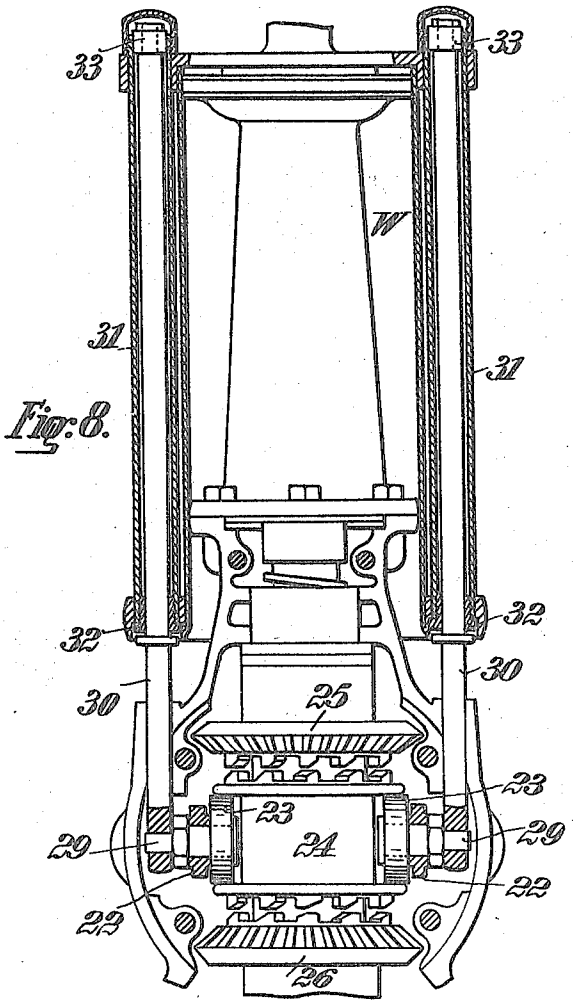

Fig. 8.

Witnesses:
C. Leckert.
M. J. L. Higgins.

Inventor
Gustav Schlatter.
By Henry Orth Jr atty.

UNITED STATES PATENT OFFICE.

GUSTAV SCHLATTER, OF ARBON, SWITZERLAND.

DUMPING-VEHICLE.

1,123,391. Specification of Letters Patent. Patented Jan. 5, 1915.

Application filed January 8, 1914. Serial No. 811,039.

To all whom it may concern:

Be it known that I, GUSTAV SCHLATTER, a citizen of the German Empire, and residing at Arbon, Switzerland, have invented certain new and useful Improvements in Dumping-Vehicles, of which the following is a specification.

The subject-matter of this invention is to provide an improved locking device for the boxes of dumping vehicles adapted to be tilted about the longitudinal sides, of the type described in my United States Patent No. 1071265 dated 26th August, 1913.

In this known device, by adjusting one single hand-lever into three positions the tilting device is entirely locked when the lever is in its middle position, and is released on the left-hand side or on the right-hand side when the lever is in its end positions, the tilting device being then locked on the opposite side, so that the box is always firmly locked either on both sides, *i. e.* when traveling, or only on the side at which the axis is located about which the box is tilted, *i. e.* when tilting. Now if such a tilting device is constructed in such manner that not only the attendance of the motor for starting the desired tilting motion of the box, but also the adjustment of the lever for locking the tilting device on the one side is controlled by the hand of the driver it may happen that, say owing to inattention, the motor may be started while the lever is still in its middle position and the box is locked, in which event under certain circumstances the rising screw-jack may destroy certain important parts.

A primary object of my invention is to obviate this defect.

To this end, in my improved tilting device the lever serves also as the lever for starting the motor, and the motor can be started by it only when it has been correctly adjusted to the one side or the other, while the motor is always disconnected in the middle position of the lever.

One illustrative embodiment of the invention is represented by way of example in the accompanying drawings, wherein:—

Figures 1 and 1ª are diagrammatic side views of the improved tilting mechanism, Figs. 2 and 2ª are top plan views thereof, and Figs. 3 and 4 are elevations showing the controlling lever in its middle and in one outside position, respectively; Fig. 5 is a detail view, partly in section, of the mechanism in Fig. 1 on an enlarged scale, Fig. 6 is a front end elevation, Fig. 7 is an enlarged central vertical section taken through the screw-jack on line 7—7, Fig. 2ª, and Fig. 8 is an elevation, partly in section, taken at right-angles to Fig. 7 showing the screw-jack.

Referring to the drawings, the hand-lever 1 is arranged near the driver's seat and can be operated by the driver from his seat. This lever can be rocked about two axes *a—b* and *c—d* at right-angles to one another. The arrangement is such that when the lever is rocked about the axis *a—b*, the box 20 (Fig. 6) is unlocked and locked on the right-hand and left-hand sides respectively for being tilted, and when it is rocked about the axis *c—d* two rods 2 and 3 are moved for actuating the known screw-jack W whose purpose is to tilt the box about an axis located on one longitudinal side or the other. To this end, a two-armed lever 10 is fulcrumed on an arm or bracket 9ª fast on the tube 9, which lever 10 by means of the rod 3 establishes a pivotal connection between the rod 2 and the lever 11 of the screw-jack W. The lever 1 can be rocked about the axis *c—d* only when its bottom end 4 has entered into either the gap 5 or the gap 6, thus only when the box is certainly unlocked on the one side or the other.

When the lever 1 is in its middle position shown in Fig. 3 its bottom end 4 bears on the solid part 12 of a stationary sector 13 between the two gaps 5 and 6 and it is impossible to couple the motor with the jack. The two outside edges bounding the gaps limit the deflection of the lever 1 toward the one side and the other.

The invention will be more clearly understood with reference to Figs. 5 to 8. As shown in Figs. 5 and 6, the lever 1 is carried by a bracket 8 on the rod 7 of the change gear lever. A tube 9 which surrounds the rod 2 is carried by the same bracket. The lever 1 fulcrumed in a frame 15 is able to rock about the axis *a—b*, and its rocking motion is transmitted by means of the arms 14, 14 and the rods 16 to those levers 17 which move the bolts 18 carried by the lower brasses 19 of the bearings of the box 20 into their locking and unlocking positions as described in the patent above referred to.

When the jack W is to be connected with and disconnected from the motor the same lever 1 acts in such manner on the lever 11 (Figs. 1ª and 7) by longitudinally shifting

the rod 2, rocking the lever 10 and longitudinally shifting the rod 3 that antifriction rollers 23 of a fork 22 fast on the fulcrum pin 21 of this lever 11 drive the clutch member 24 into engagement with one of the two bevel-gears 25 and 26, which likewise constitute clutch members. These bevel-gears are driven in opposite directions by a bevel-gear 27 which is fast on the driving shaft 28 and accordingly cause the spindle 34 to be rotated in the one or other direction for raising or lowering the box.

Rods 30 (Fig. 8) arranged in tubes 31 and carrying nuts 33 at the upper ends take over the ends of the pin 29 of the fork 22; when the jack rises these tubes slide over the nuts and are driven until wooden plugs 32 abut against the nuts and drive the same, whereby the claw-clutch is disconnected.

I claim:—

1. In a dumping vehicle, the combination with means for locking each side of the vehicle box, means for tilting the box, and mechanism comprising a hand-lever for actuating said locking means, of mechanism for controlling said tilting means adapted to be actuated by said lever only when the same is rocked into one of its end positions.

2. In a dumping vehicle, the combination with means for locking each side of the vehicle box, means for tilting the box, and mechanism comprising a hand-lever adapted to rock about one axis for actuating said locking means, of mechanism for controlling said tilting means adapted to be actuated by said lever only when the same is rocked into one of its end positions and about an axis at right-angles to the former axis.

3. In a dumping vehicle, the combination of means for locking each side of the vehicle box, mechanism for actuating the locking means, means for tilting the box, a longitudinally movable rod for controlling the tilting means, and a tube surrounding said rod, a hand-lever mounted on said tube and adapted to turn into two end positions, said hand-lever being adapted to shift said rod longitudinally only when the same is located in one of its end positions and when rocked about an axis at right-angles to the tube.

4. In a dumping vehicle, the combination of means for locking each side of the vehicle box, mechanism for actuating the locking means, means for tilting the box, a longitudinally movable rod for controlling the tilting means, a support comprising a fixed sector having gaps at the ends thereof, a tube carried by the support and surrounding said rod, a hand-lever mounted on said tube and adapted to take into said gaps in the end positions thereof, said hand-lever being adapted to shift said rod longitudinally when the same enters into one of said gaps.

In testimony whereof, I affix my signature in the presence of two witnesses.

GUSTAV SCHLATTER.

Witnesses:
RANDALL ATKINSON,
ARTHUR G. JOSEPH.