US 20030155672A1

(19) United States

(12) Patent Application Publication

(10) Pub. No.: US 2003/0155672 A1

(43) Pub. Date: Aug. 21, 2003

Kazmer et al.

(54) MANIFOLD SYSTEM HAVING FLOW CONTROL

(75) Inventors: **David Kazmer**, Amherst, MA (US); **Mark D. Moss**, Boxford, MA (US); **Mark Doyle**, Newburyport, MA (US); **Huip van Geel**, ZJ's-Gravendeel (NL)

Correspondence Address:
KUDIRKA & JOBSE, LLP
ONE STATE STREET
SUITE 1510
BOSTON, MA 02109 (US)

(73) Assignee: **Synventive Molding Solutions**, Peabody, MA (US) (US)

(21) Appl. No.: **10/269,927**

(22) Filed: **Oct. 11, 2002**

Related U.S. Application Data

(63) Continuation of application No. 09/400,533, filed on Sep. 21, 1999, now Pat. No. 6,464,909, which is a continuation-in-part of application No. 09/063,762, filed on Apr. 21, 1998, now Pat. No. 6,361,300.

(60) Provisional application No. 60/124,596, filed on Mar. 16, 1999.

Publication Classification

(51) **Int. Cl.**[7] **B29C 45/76**

(52) **U.S. Cl.** **264/40.1**; 425/166; 425/149; 425/170; 425/173; 425/564

(57) **ABSTRACT**

An injection molding apparatus and method are provided in which the rate of material flow during an injection cycle is controlled. According to one preferred embodiment, an injection molding apparatus is provided that includes a manifold, at least one injection nozzle coupled to the manifold, an actuator, and a valve pin adapted to reciprocate through the manifold and the injection nozzle. The valve pin has a first end coupled to the actuator, a second end that closes the gate in a forward position, and a control surface intermediate said first and second ends for adjusting the rate of material flow during an injection cycle. Retracting the valve pin tends to decrease the rate of material flow during the injection cycle and displacing the valve pin toward the gate tends to increase the rate of material flow during the injection cycle.

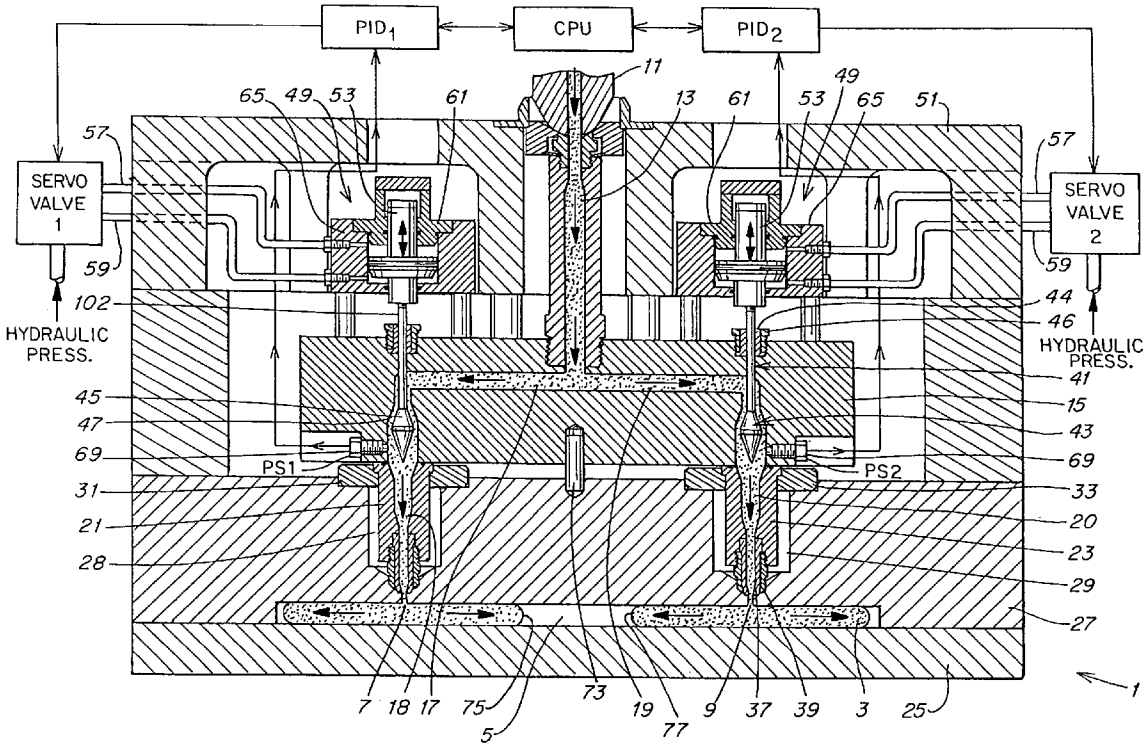

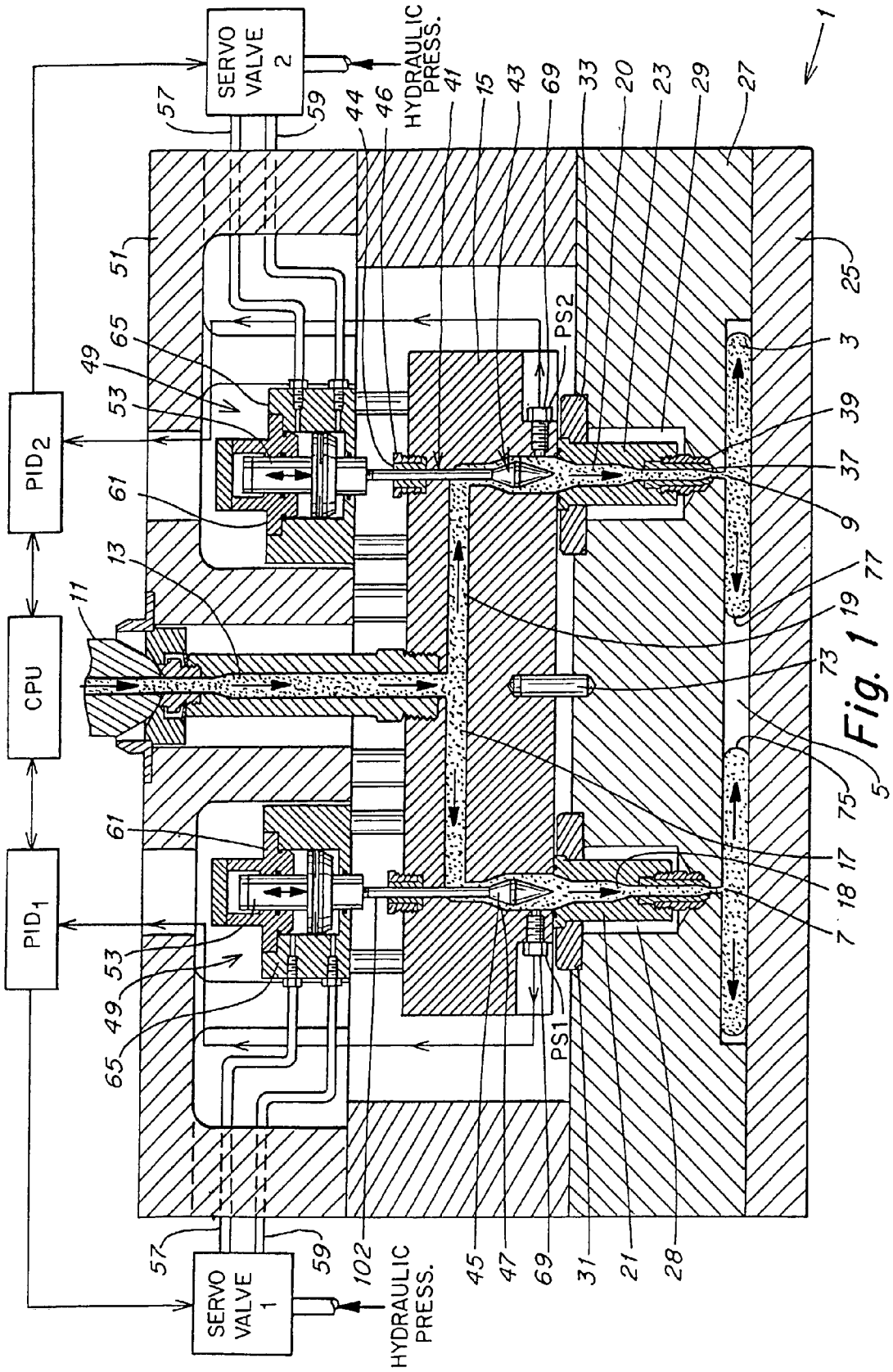
SERVO VALVE 2
HYDRAULIC PRESS.
SERVO VALVE 1
HYDRAULIC PRESS.
PID2
CPU
PID1
PS2
PS1
1
3
5
7
9
11
13
15
17
18
19
20
21
23
25
27
28
29
31
33
37
39
41
43
44
45
46
47
49
51
53
57
59
61
65
69
73
75
77
102

Fig. 1

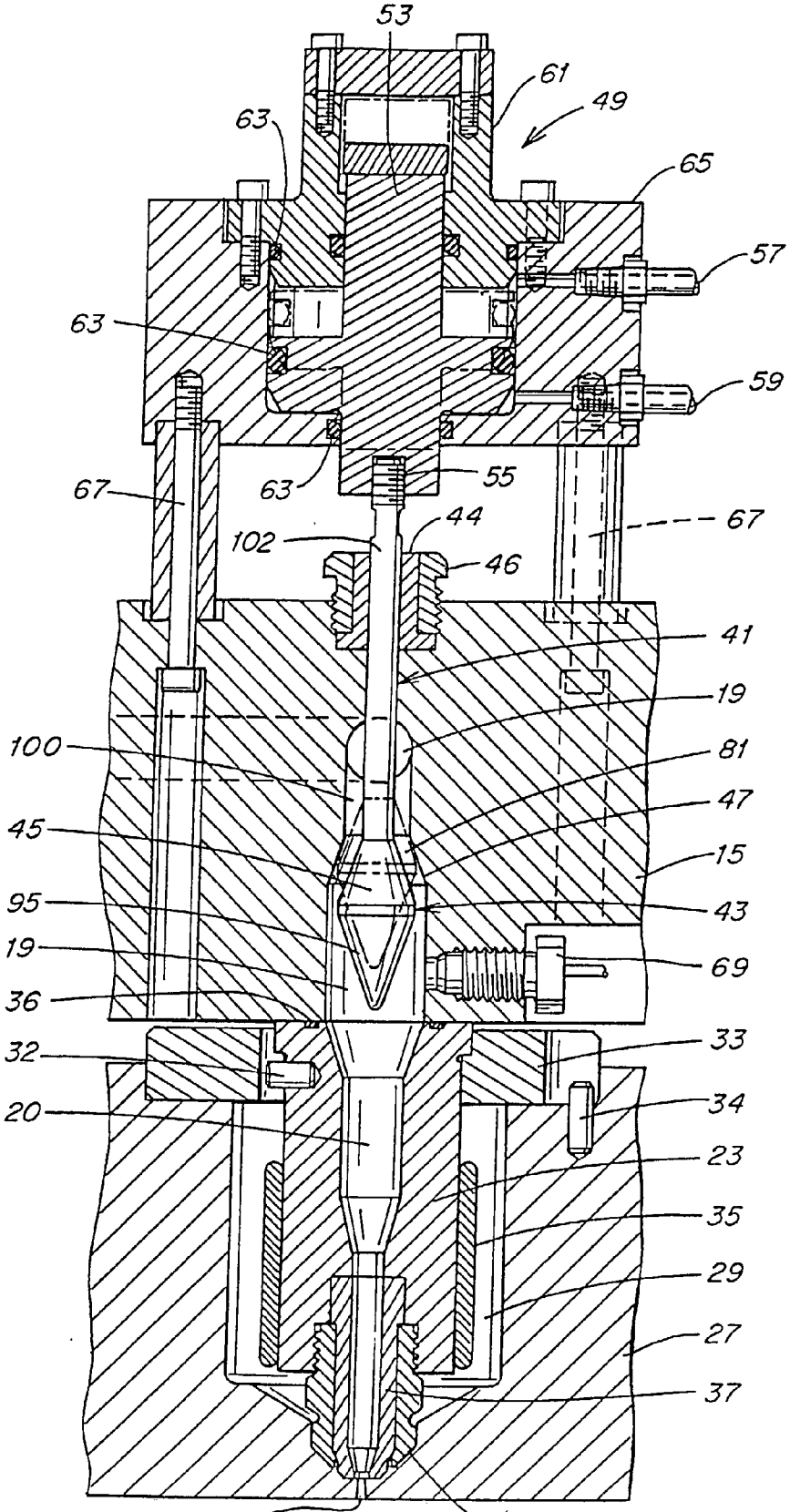
53
61
49
63
65
57
63
59
63
55
67
44
67
102
46
41
19
100
81
47
45
15
95
43
19
69
36
33
32
34
20
23
35
29
27
37
9
39

Fig. 2

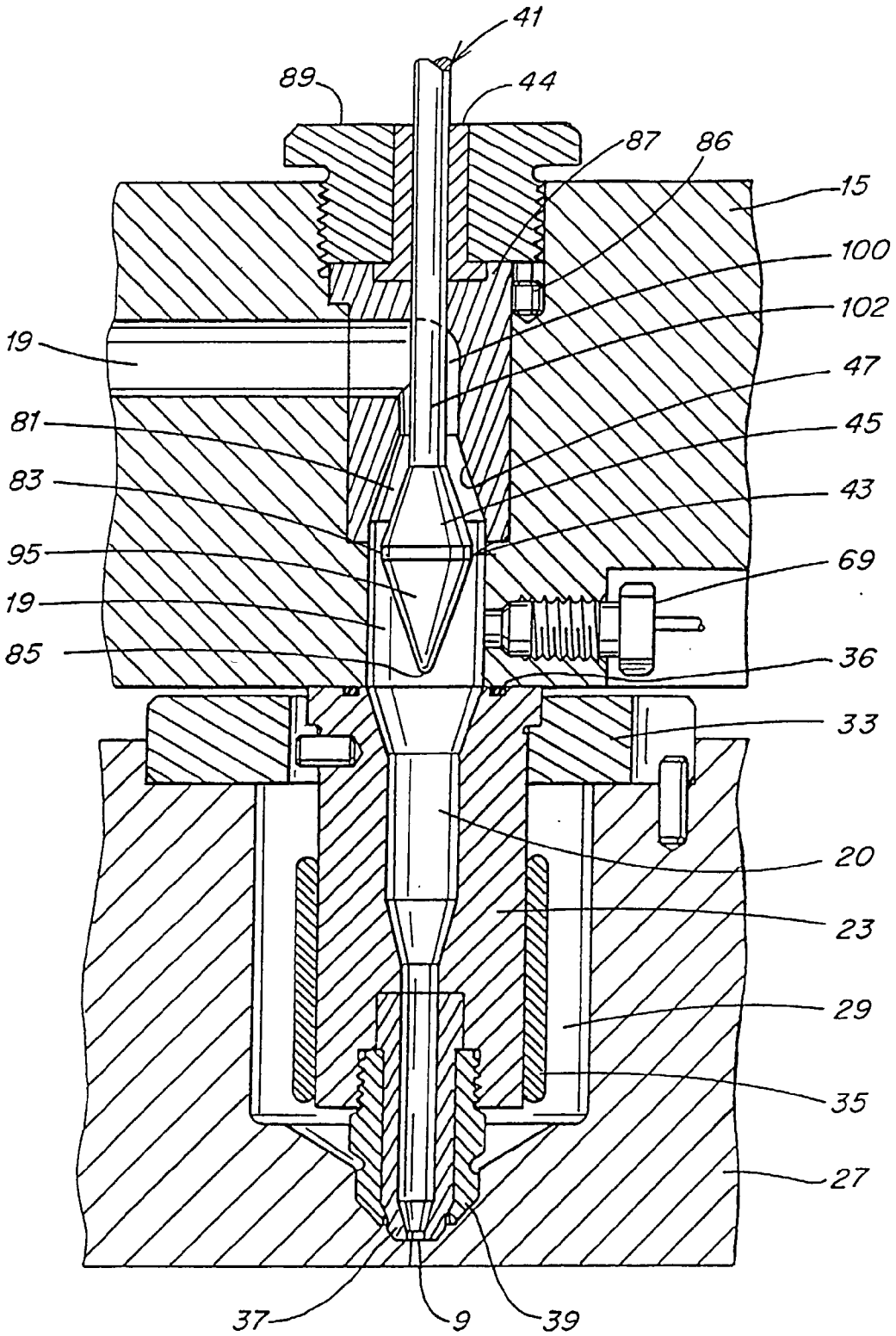
41
89
44
87
86
15
100
102
19
47
81
45
83
43
95
69
19
85
36
33
20
23
29
35
27
37
9
39

Fig. 3

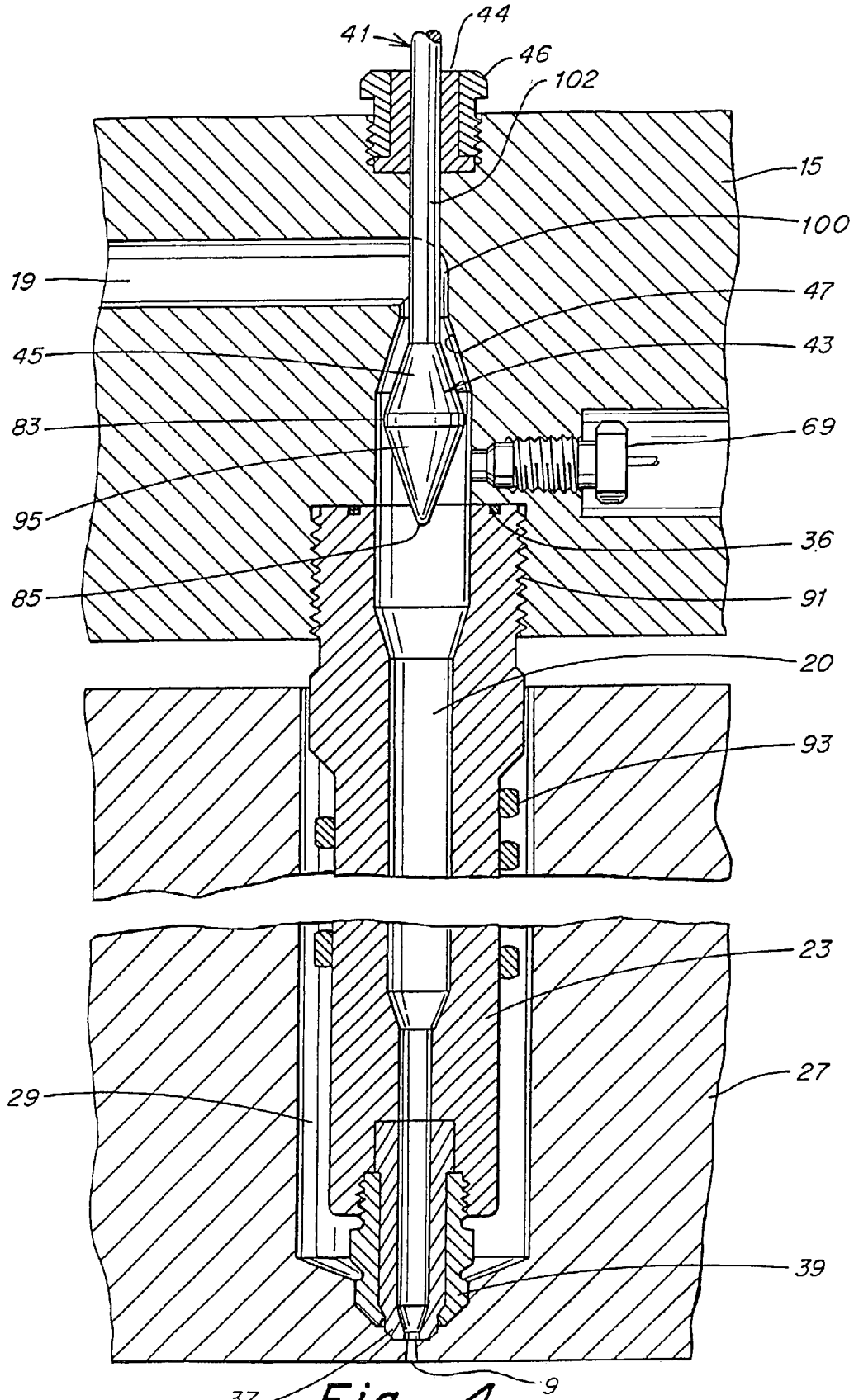

Fig. 4

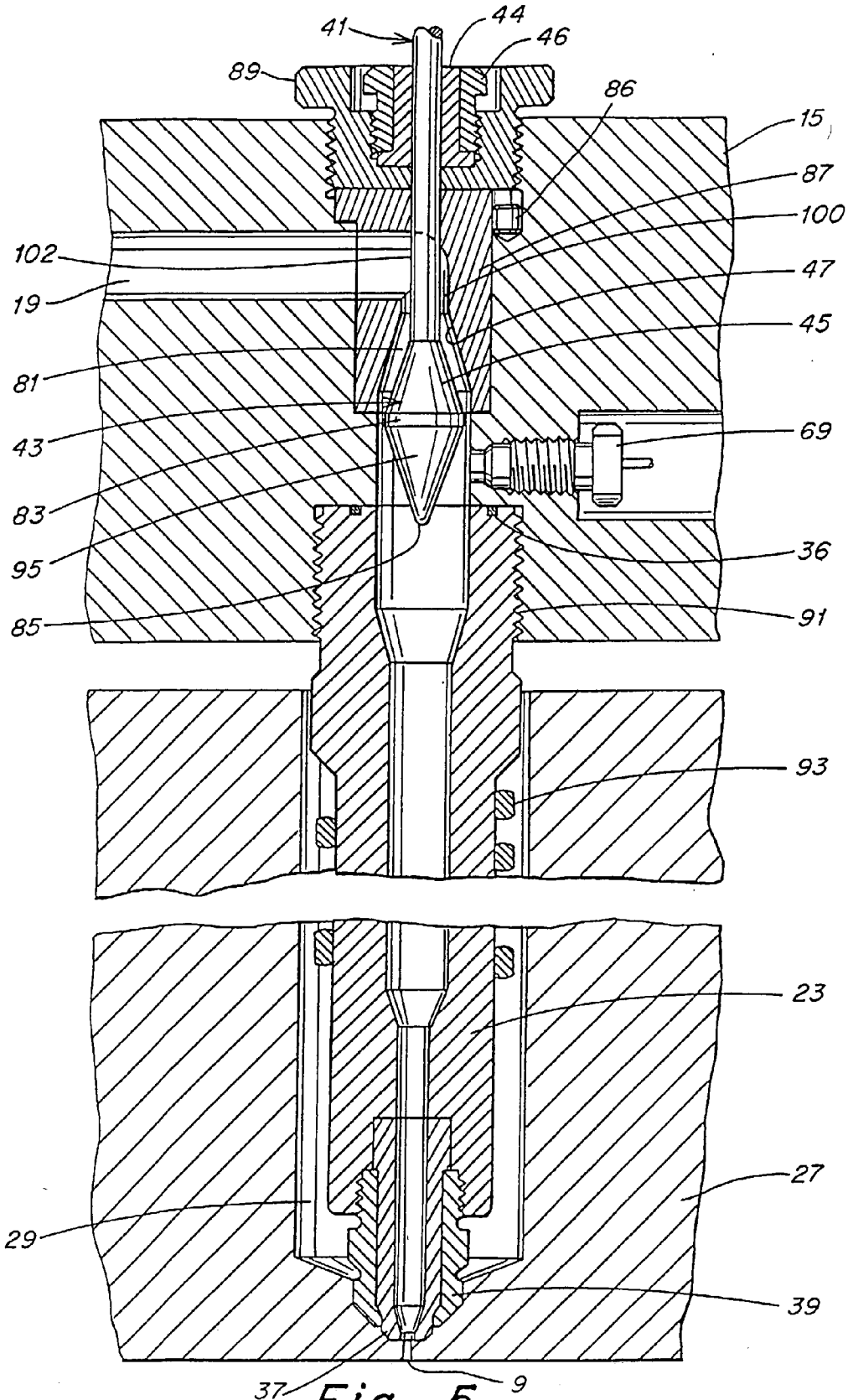
41
44
46
89
86
15
87
100
102
47
19
45
81
69
43
83
36
95
91
85
93
23
27
29
39
37
9

Fig. 5

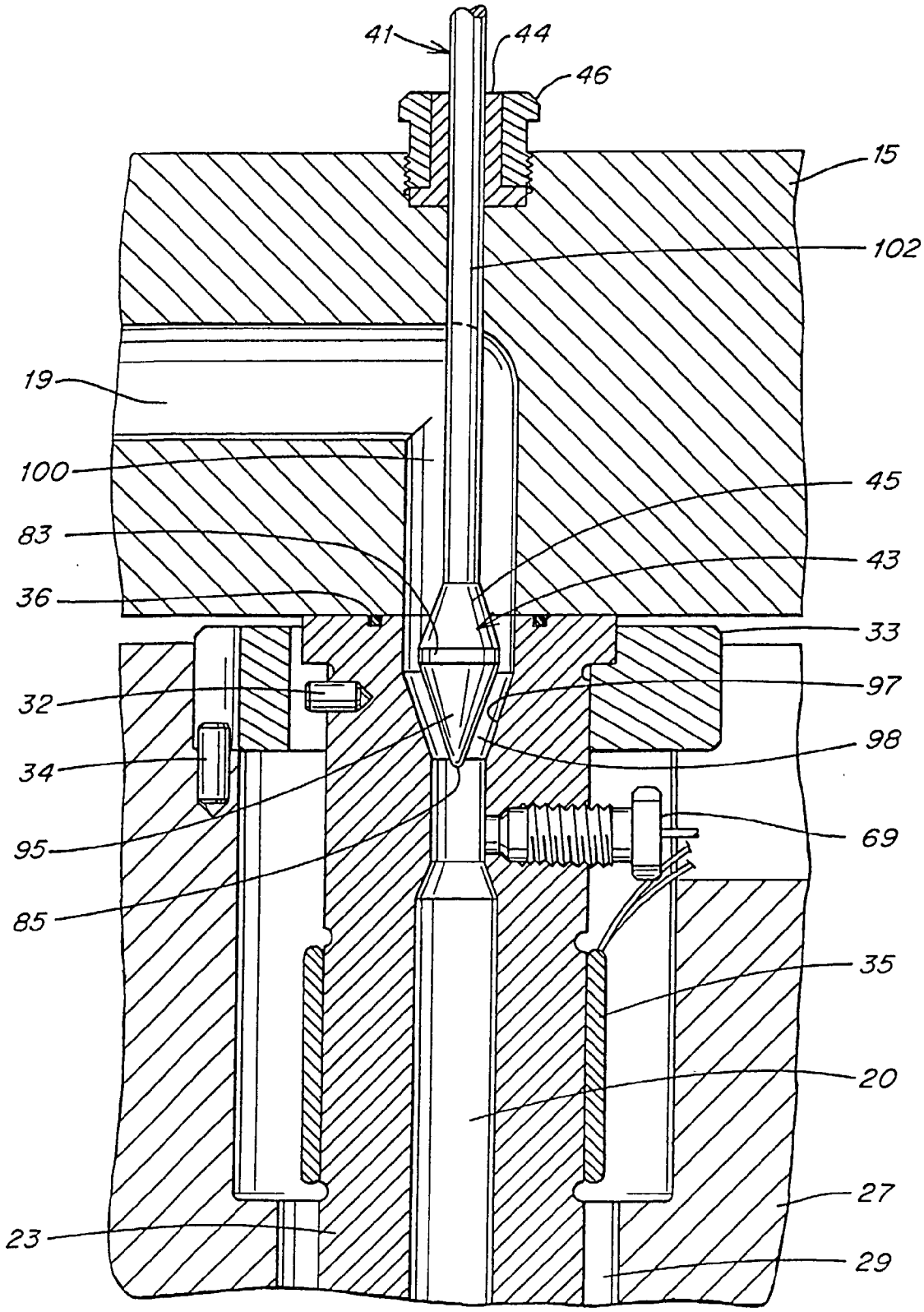
41
44
46
15
102
19
100
45
83
43
36
33
32
97
98
34
69
95
85
35
20
27
23
29

Fig. 6

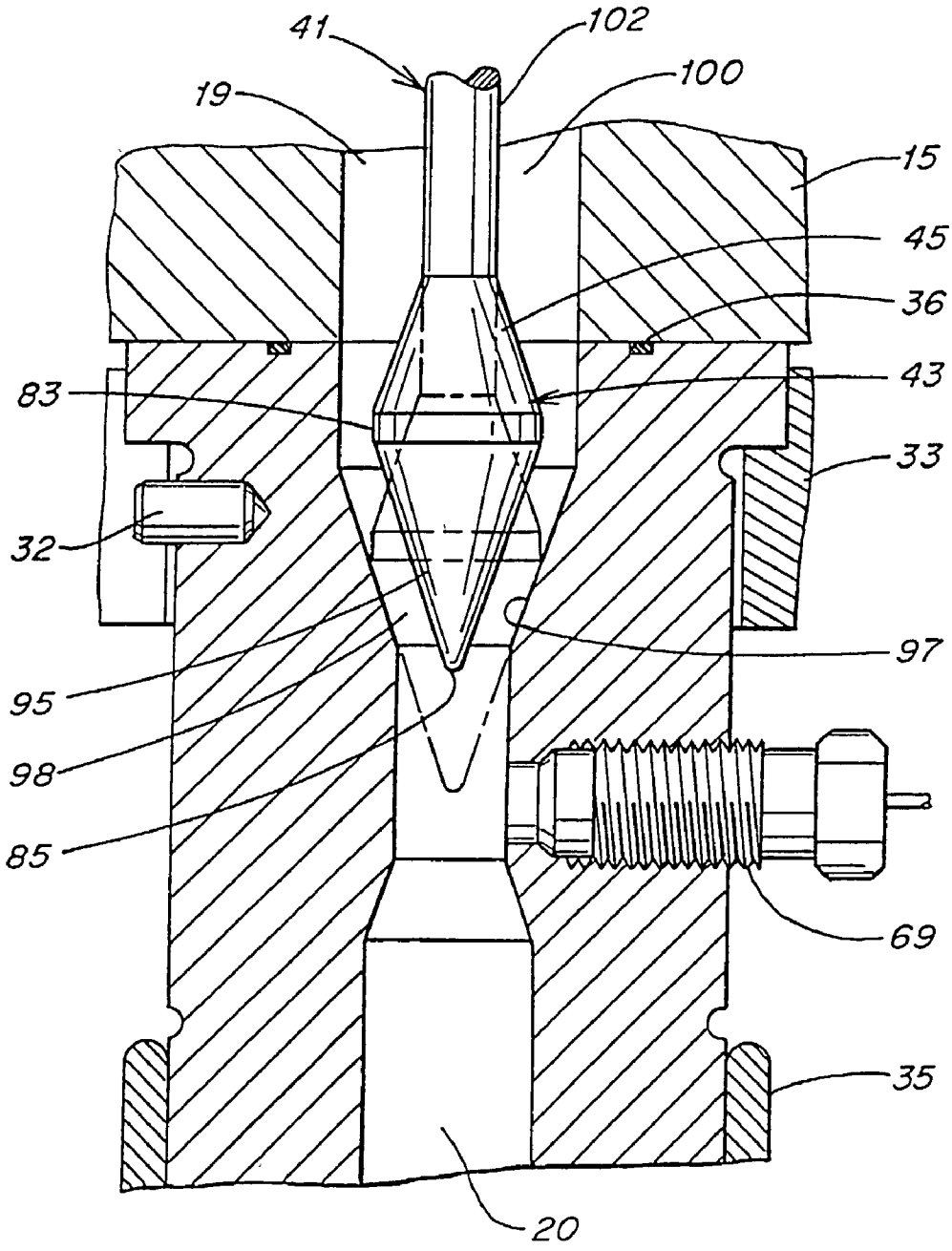

Fig. 7

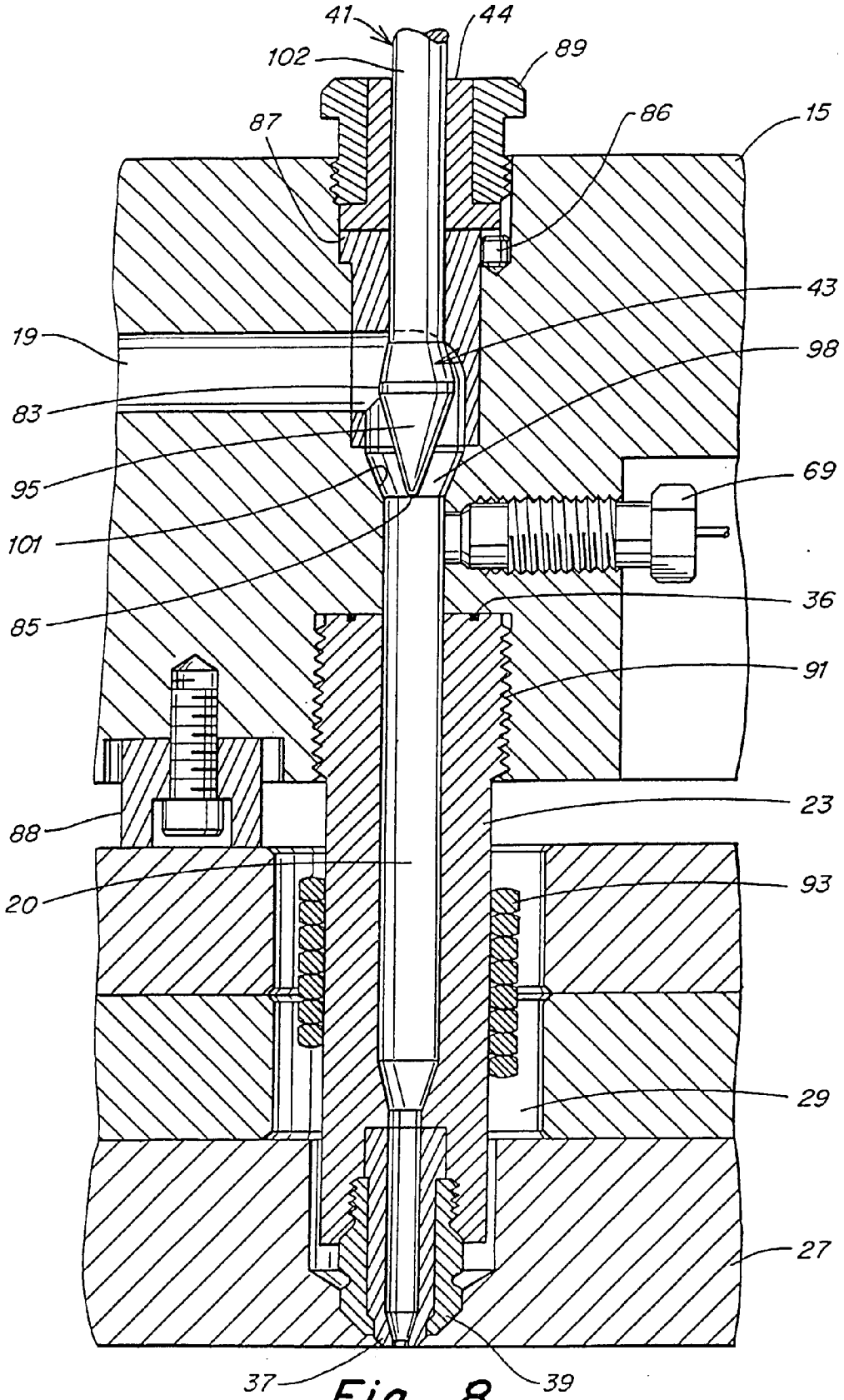
41
44
102
89
87
86
15
43
19
98
83
95
69
101
36
85
91
23
88
20
93
29
27
37
39

Fig. 8

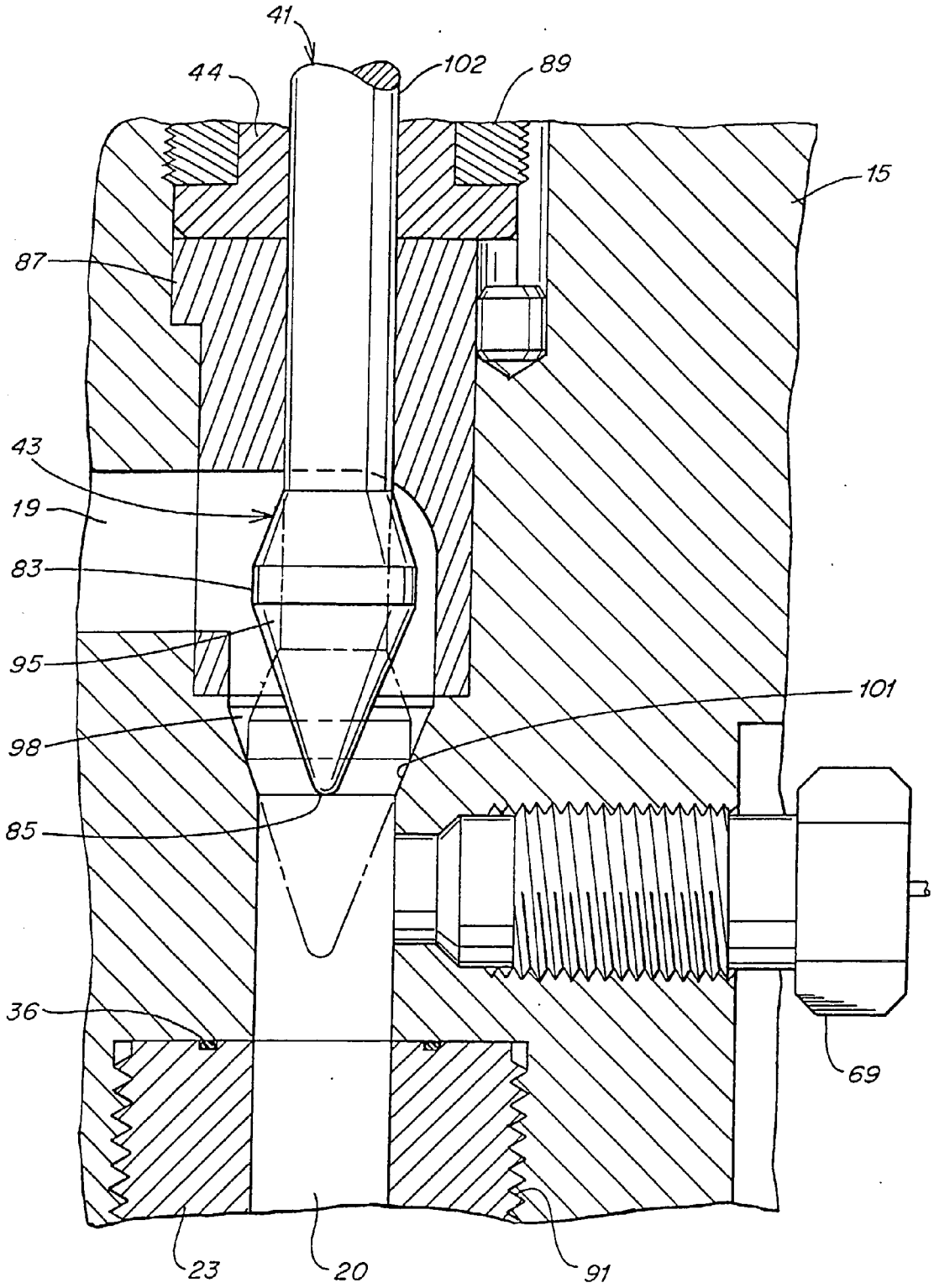

Fig. 9

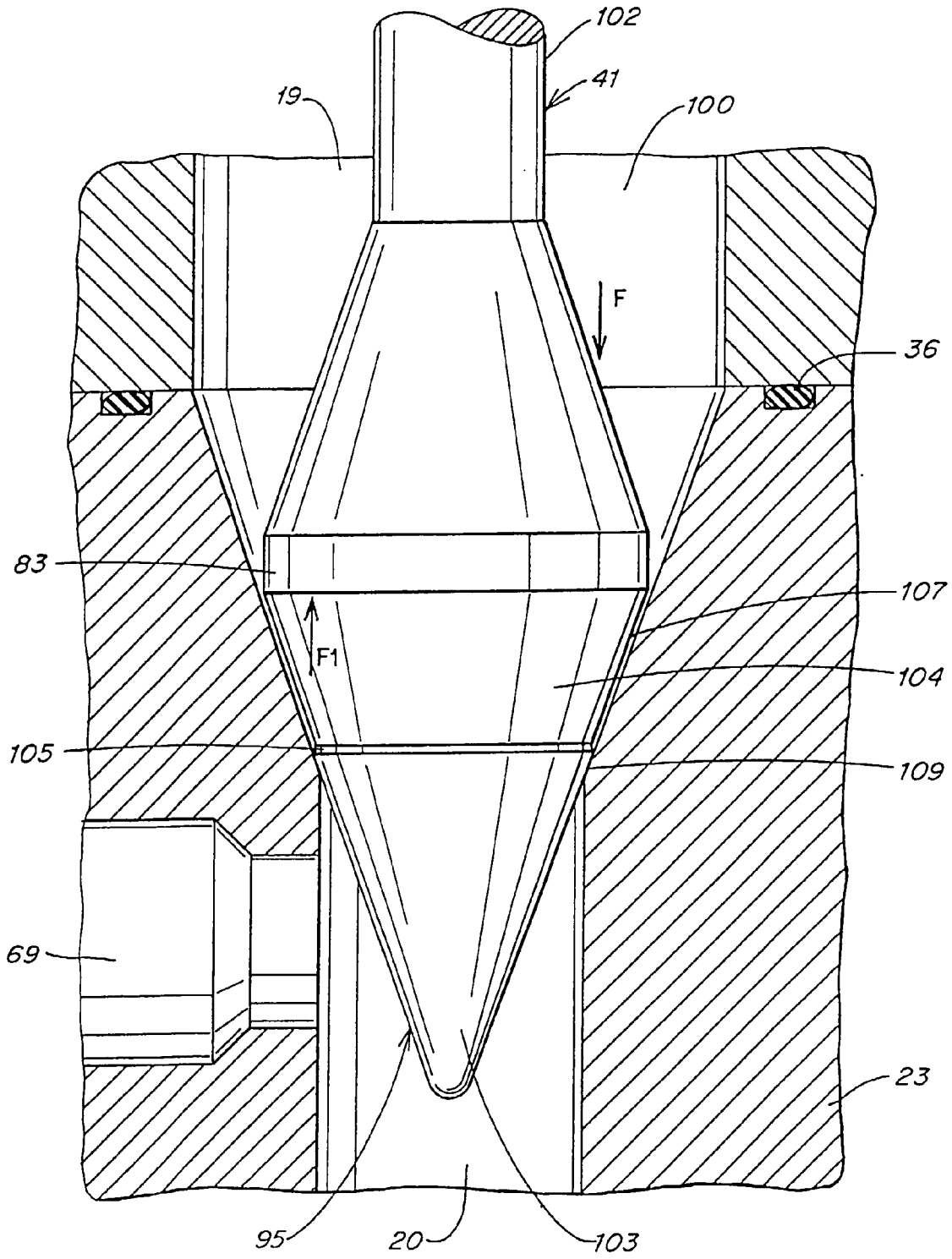

Fig. 10

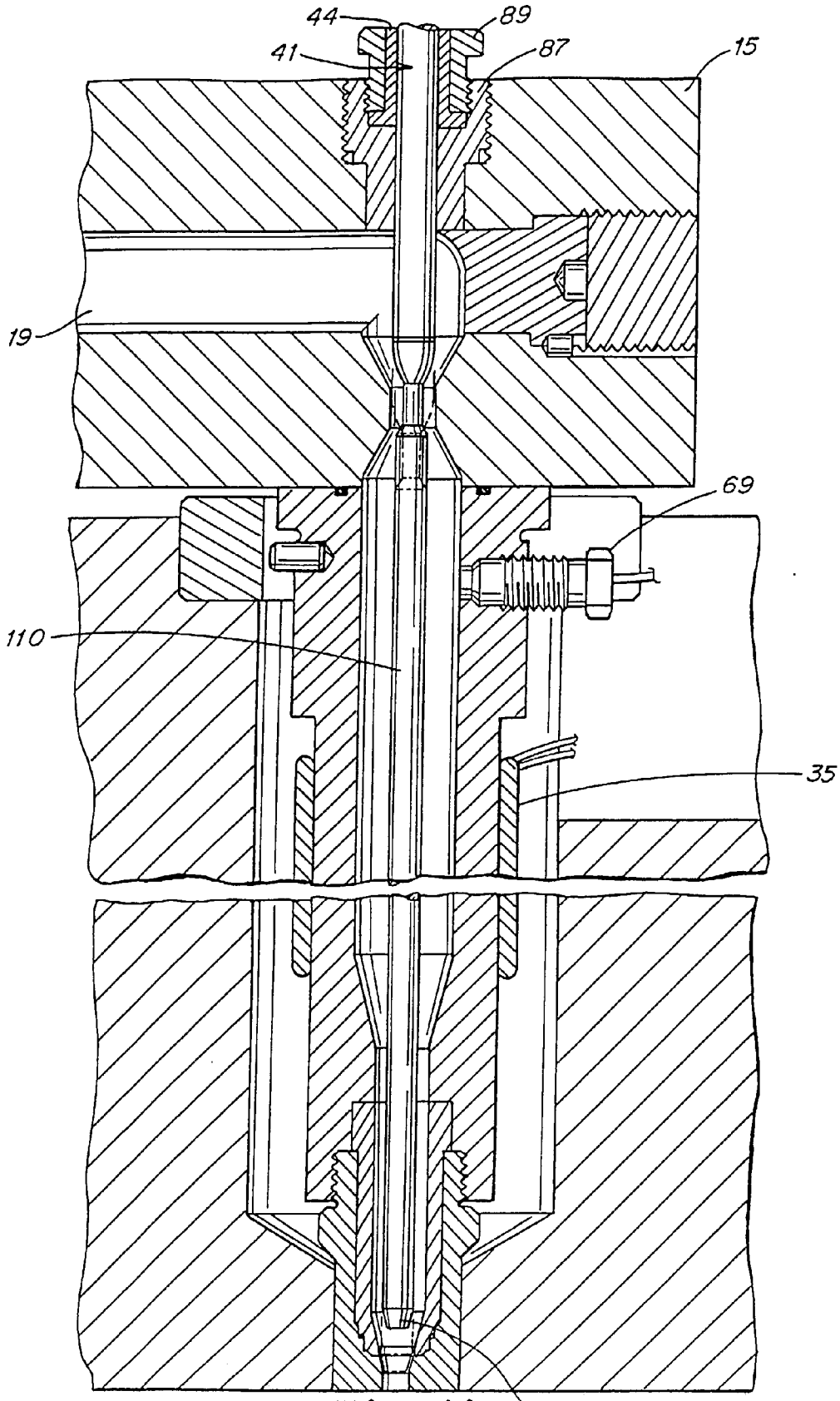

Fig. 11

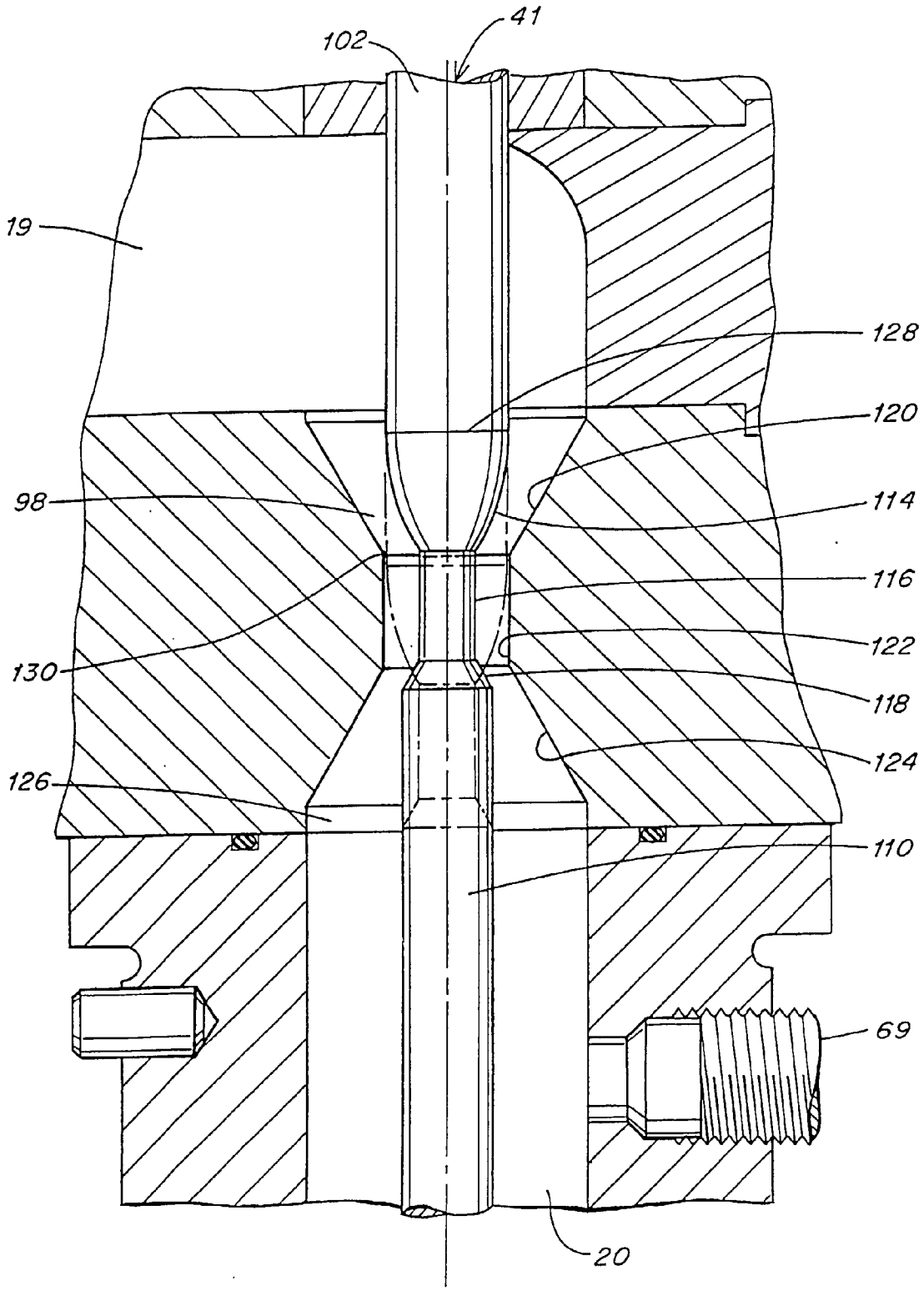

Fig. 12

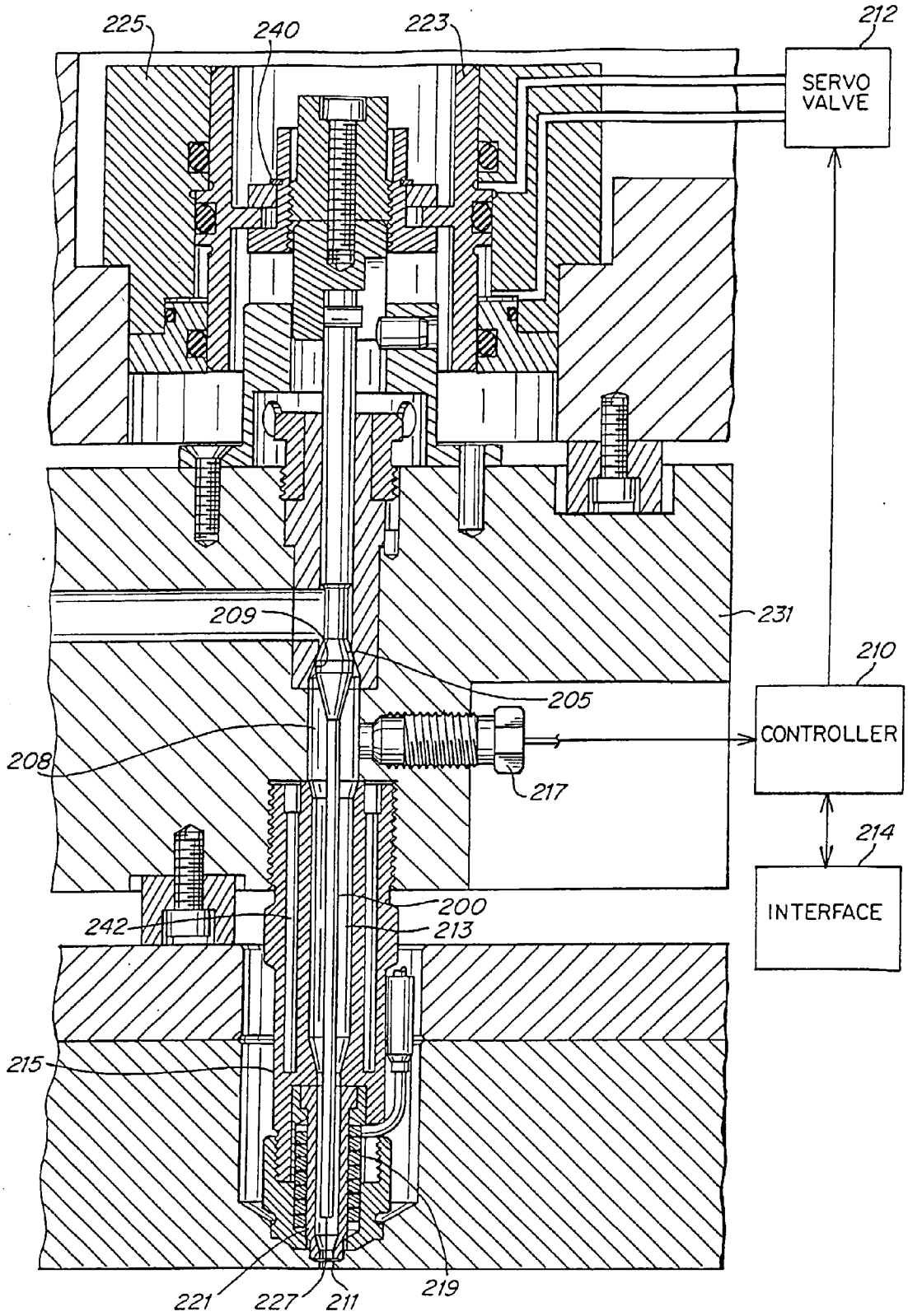
225
240
223
212
SERVO VALVE
209
231
210
205
CONTROLLER
208
217
214
INTERFACE
200
242
213
215
221
227
211
219

Fig. 13

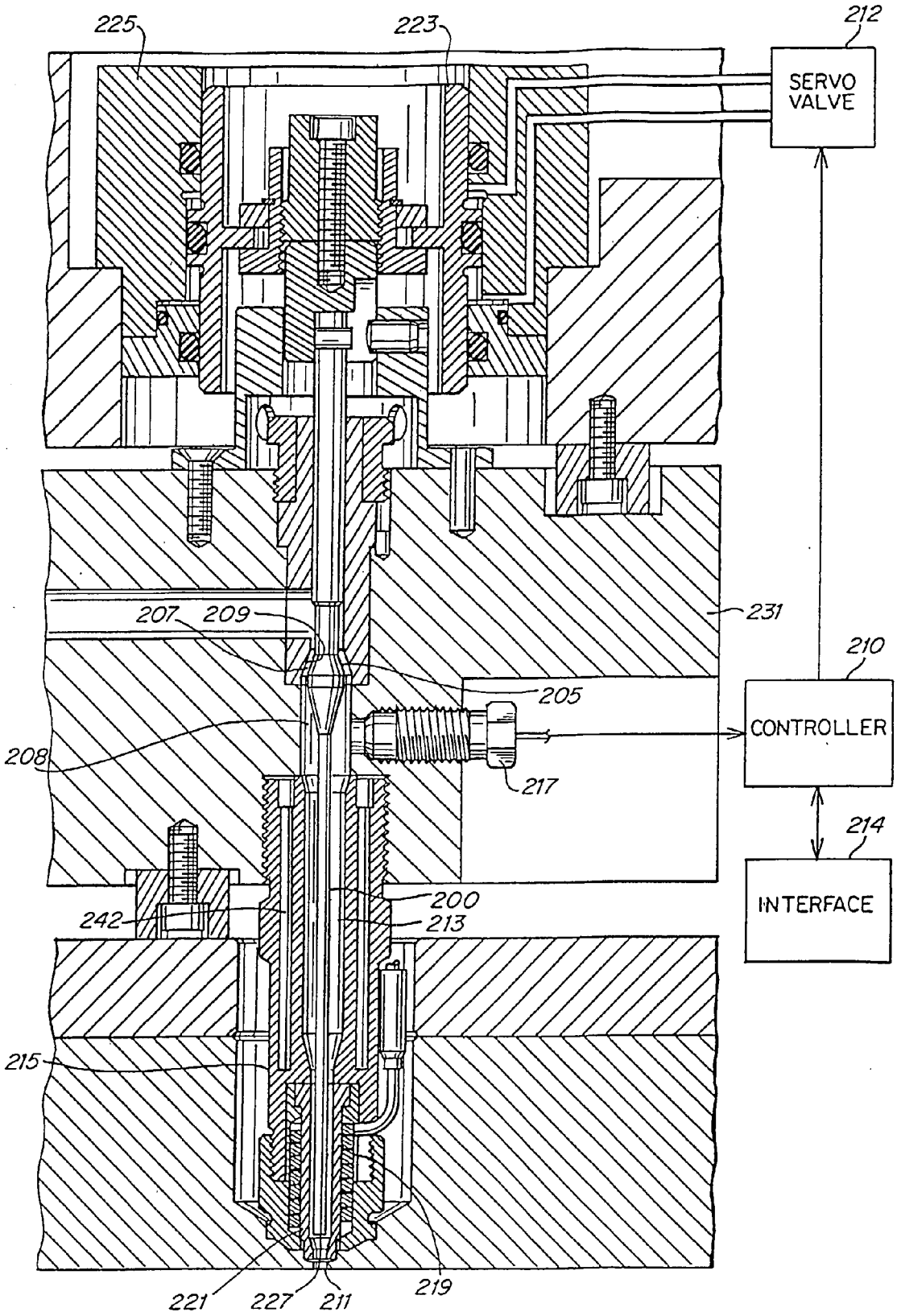
225
223
212
SERVO VALVE
231
207
209
205
210
CONTROLLER
208
217
214
INTERFACE
200
242
213
215
221
227
211
219

Fig. 14

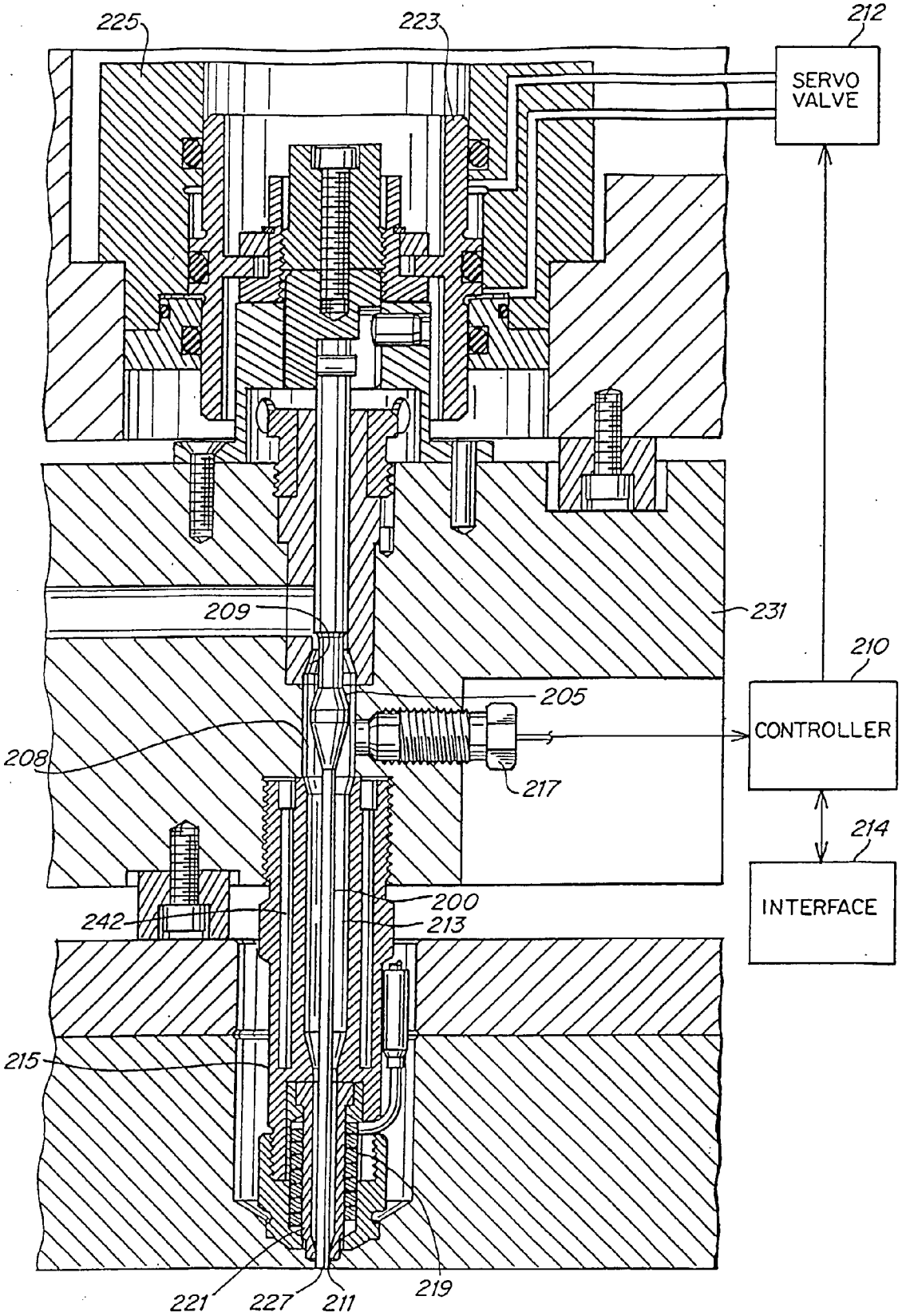
225
223
212
SERVO VALVE
209
231
210
205
CONTROLLER
208
217
214
INTERFACE
200
242
213
215
221
227
211
219

Fig. 15

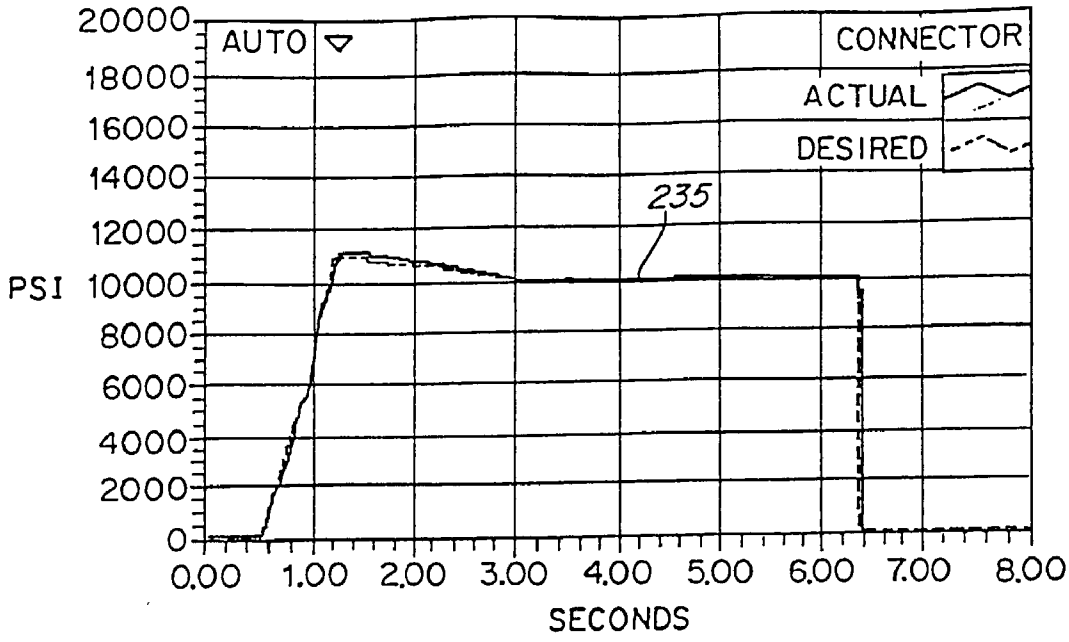

Fig. 16a

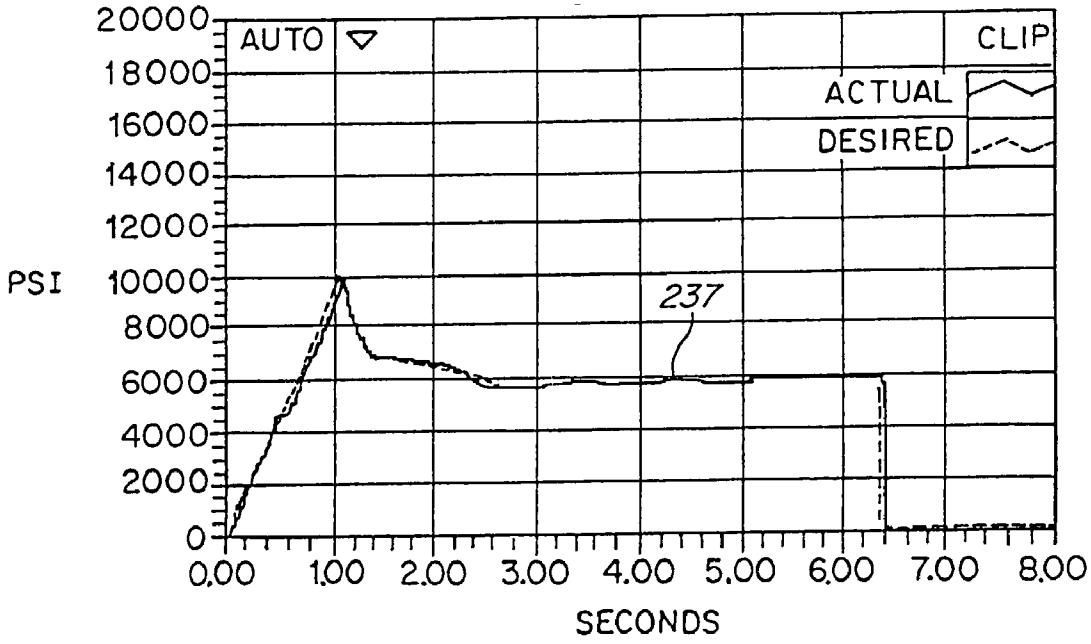

Fig. 16b

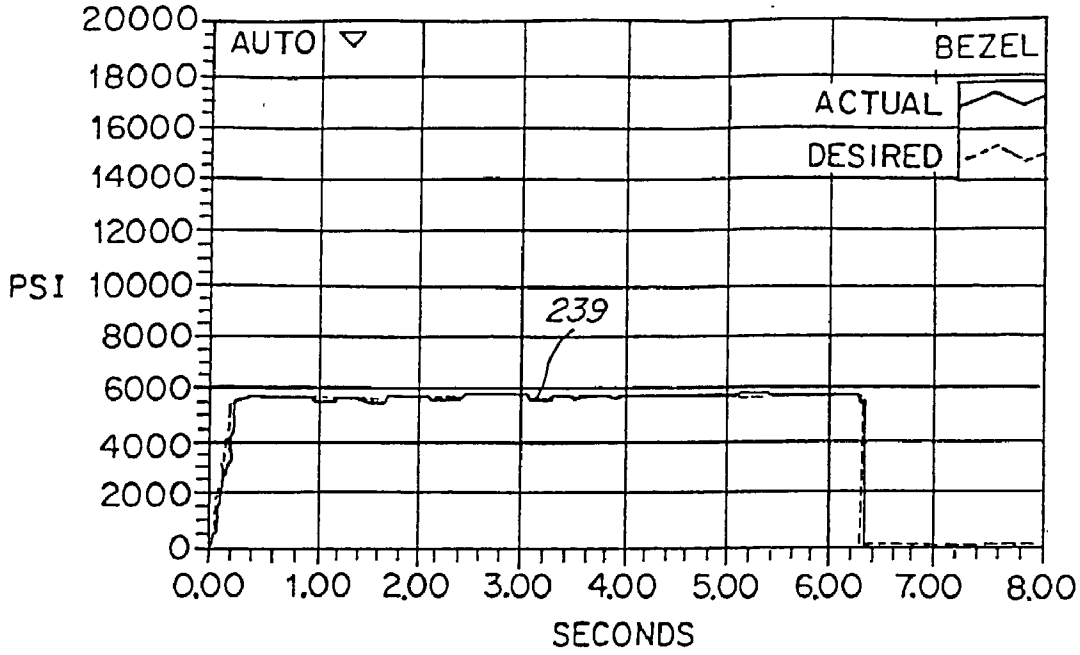

Fig. 16c

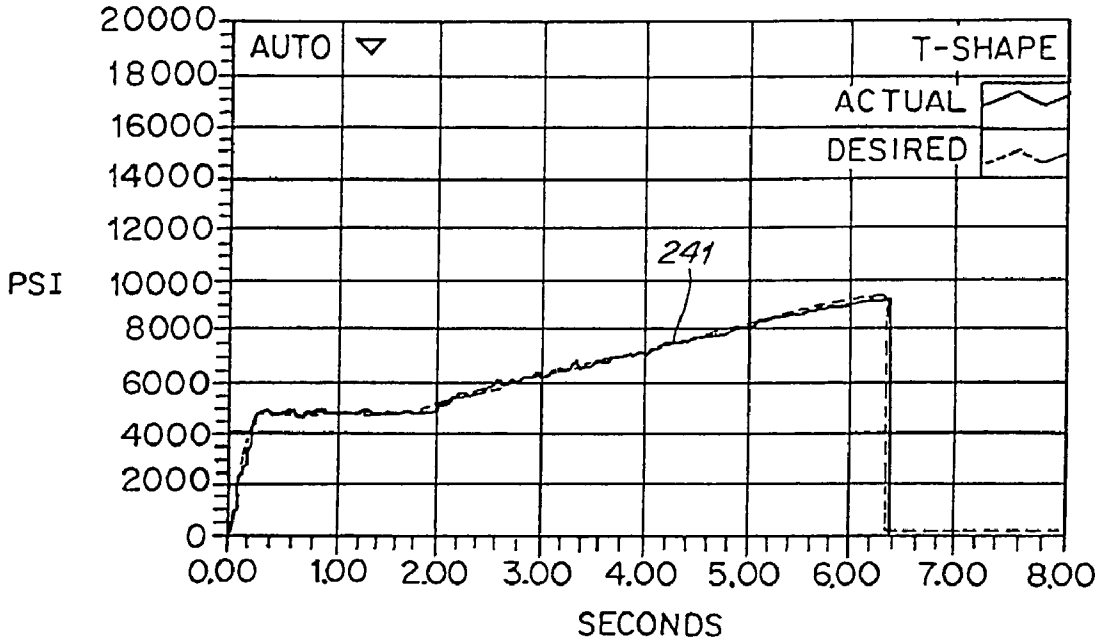

Fig. 16d

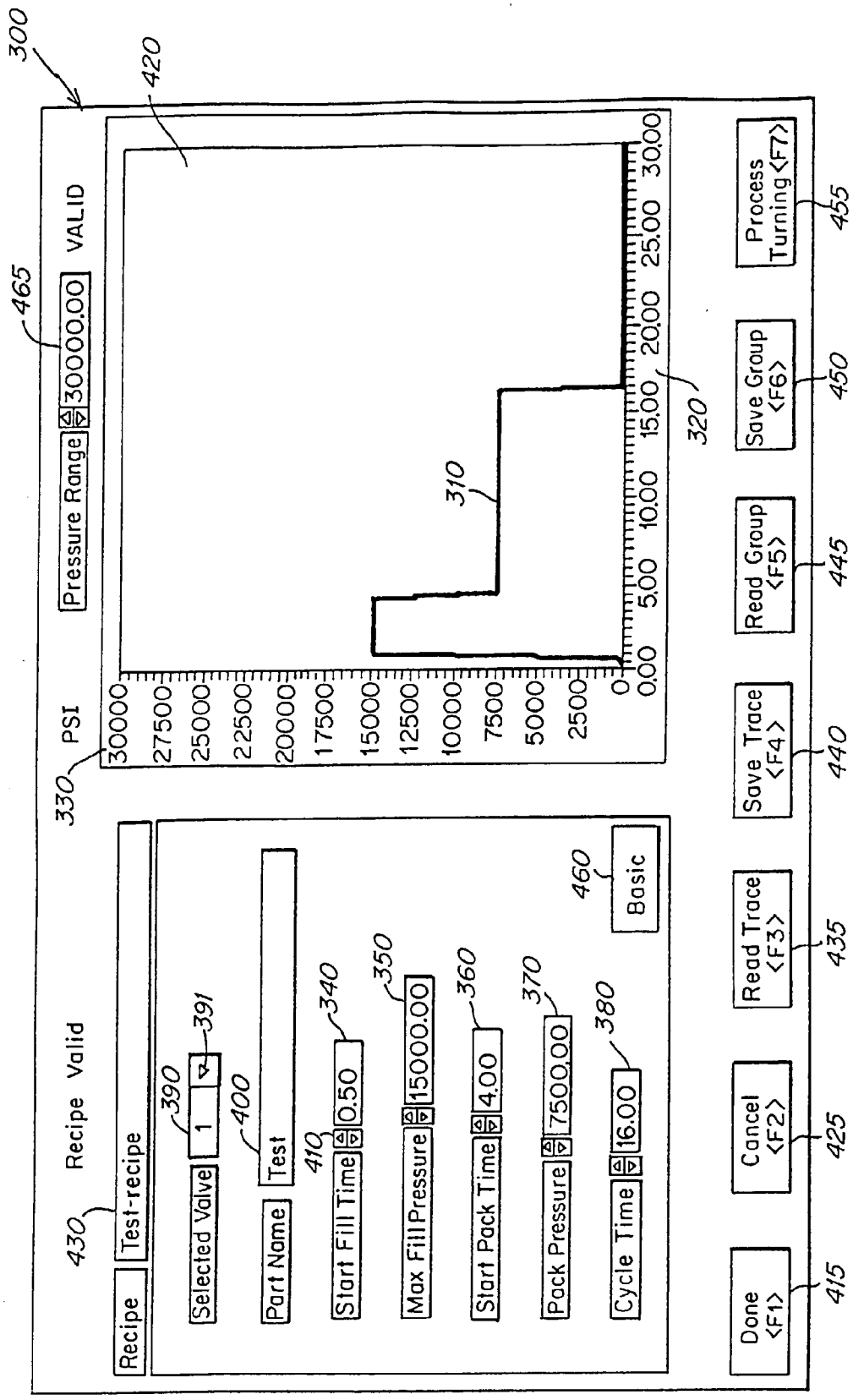
300
420
465
Pressure Range
30000.00
VALID
PSI
330
30000
27500
25000
22500
20000
17500
15000
12500
10000
7500
5000
2500
0
0.00
5.00
10.00
15.00
20.00
25.00
30.00
310
320
Recipe
Recipe Valid
Test-recipe
430
Selected Valve
1
390
391
Part Name
Test
400
Start Fill Time
0.50
410
340
Max Fill Pressure
15000.00
350
Start Pack Time
4.00
360
Pack Pressure
7500.00
370
Cycle Time
16.00
380
Basic
460
Done <F1>
415
Cancel <F2>
425
Read Trace <F3>
435
Save Trace <F4>
440
Read Group <F5>
445
Save Group <F6>
450
Process Turning<F7>
455

Fig. 17

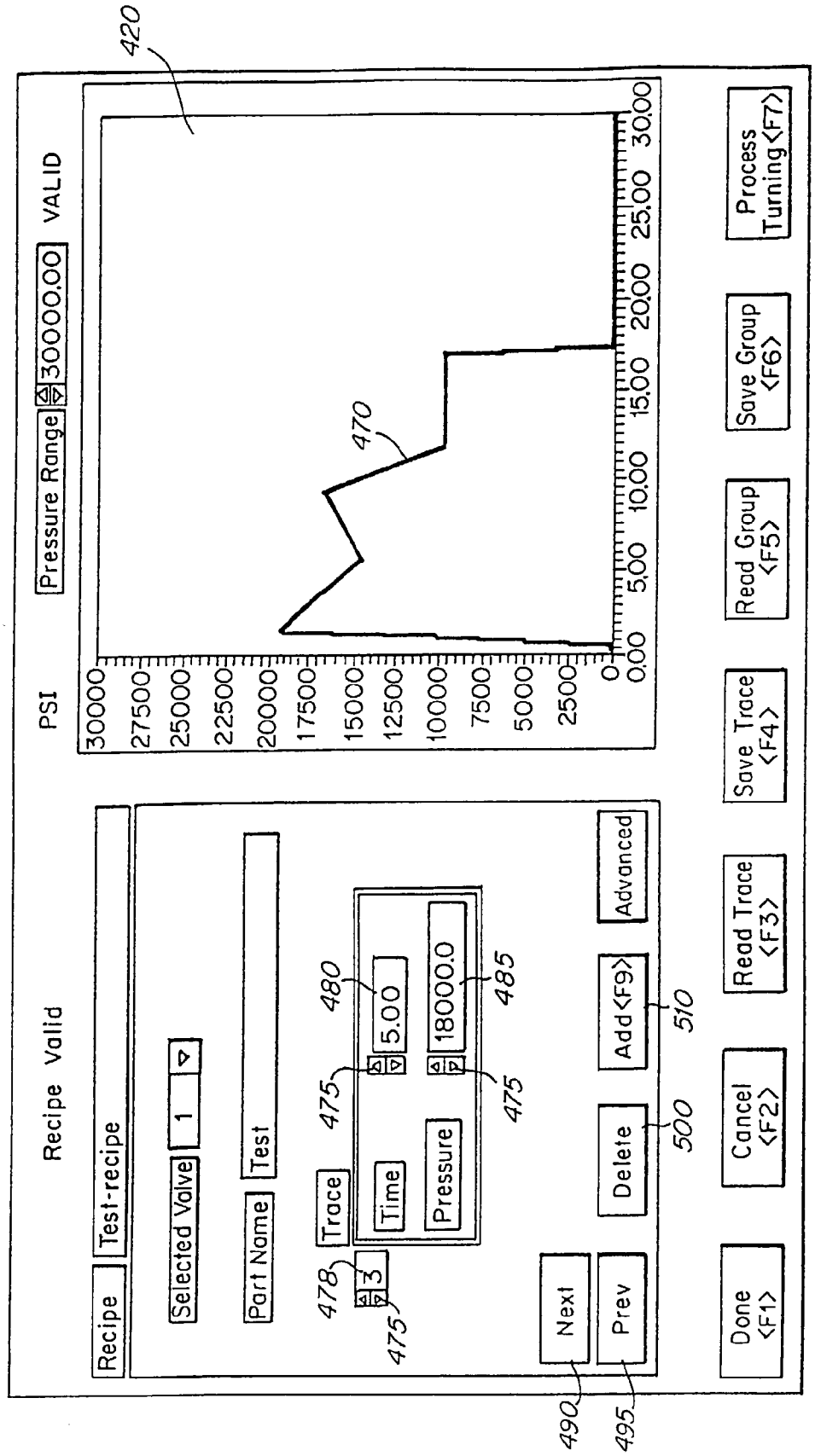
420
PSI
Pressure Range
30000.00
VALID
30000
27500
25000
22500
20000
17500
15000
12500
10000
7500
5000
2500
0
0.00
5.00
10.00
15.00
20.00
25.00
30.00
470
Recipe Valid
Recipe
Test-recipe
Selected Valve
1
Part Name
Test
Trace
3
Time
5.00
Pressure
18000.0
Advanced
Add <F9>
Delete
Next
Prev
Done <F1>
Cancel <F2>
Read Trace <F3>
Save Trace <F4>
Read Group <F5>
Save Group <F6>
Process Turning <F7>
475
478
480
485
490
495
500
510

Fig. 18

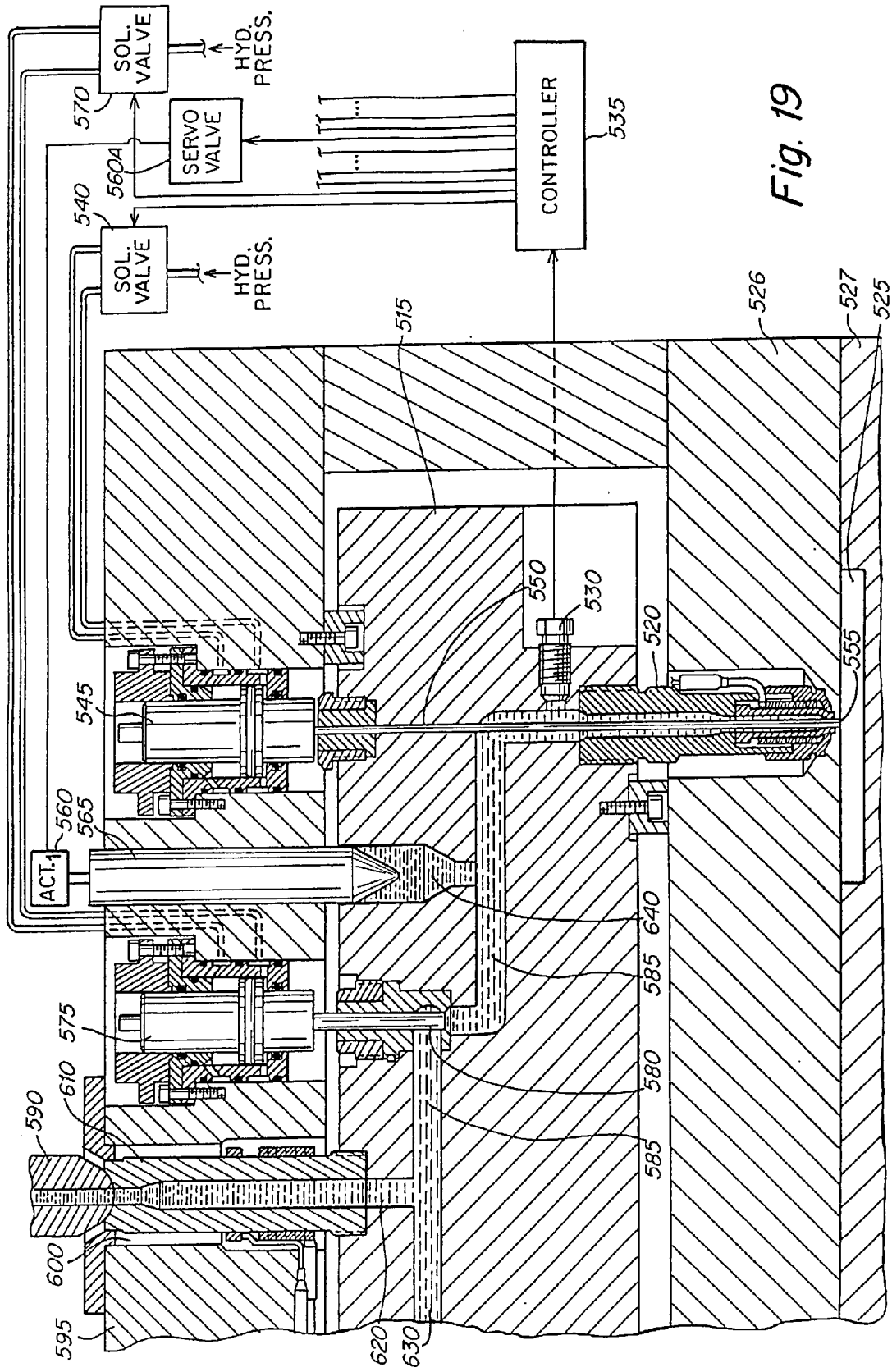
SOL. VALVE
HYD. PRESS.
SERVO VALVE
CONTROLLER
SOL. VALVE
HYD. PRESS.
ACT.1
570
560A
540
535
515
526
527
525
550
530
520
555
545
560
565
640
585
575
580
610
590
585
600
595
620
630

Fig. 19

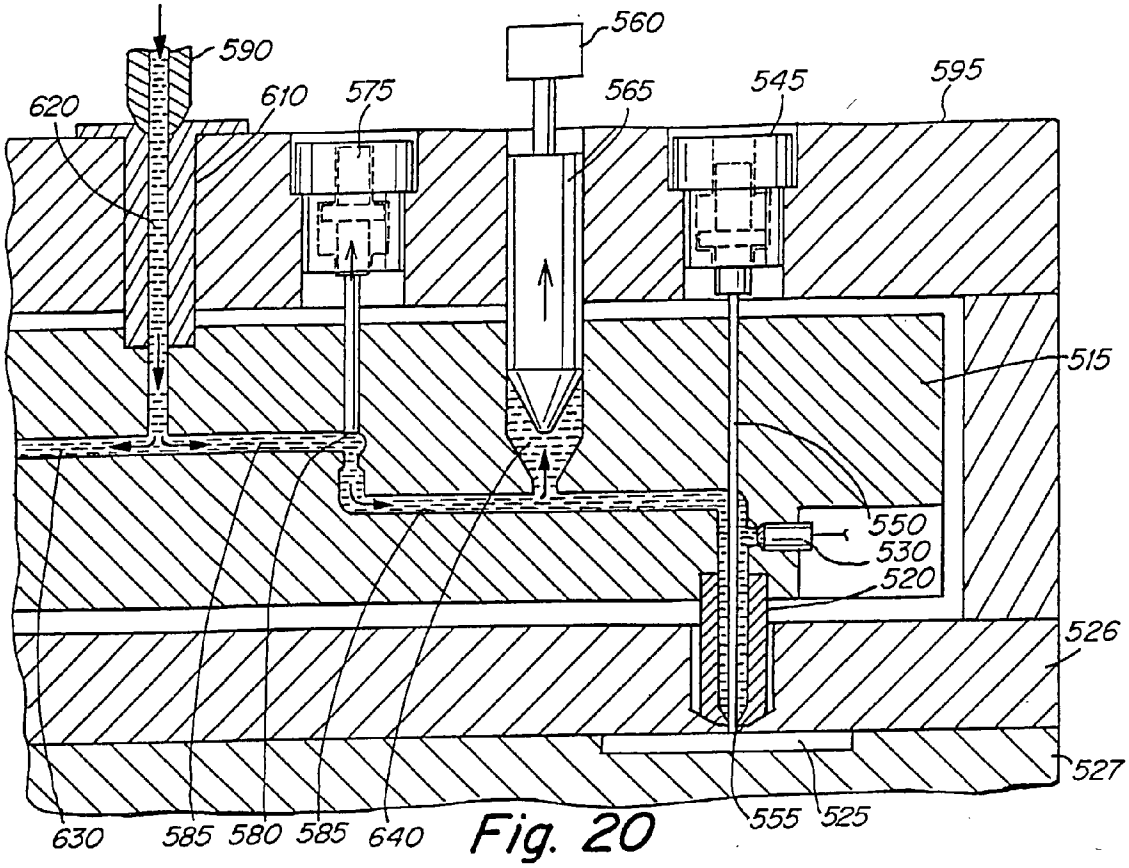
590
560
620
610
575
565
545
595
515
550
530
520
526
527
630
585
580
585
640
555
525

Fig. 20

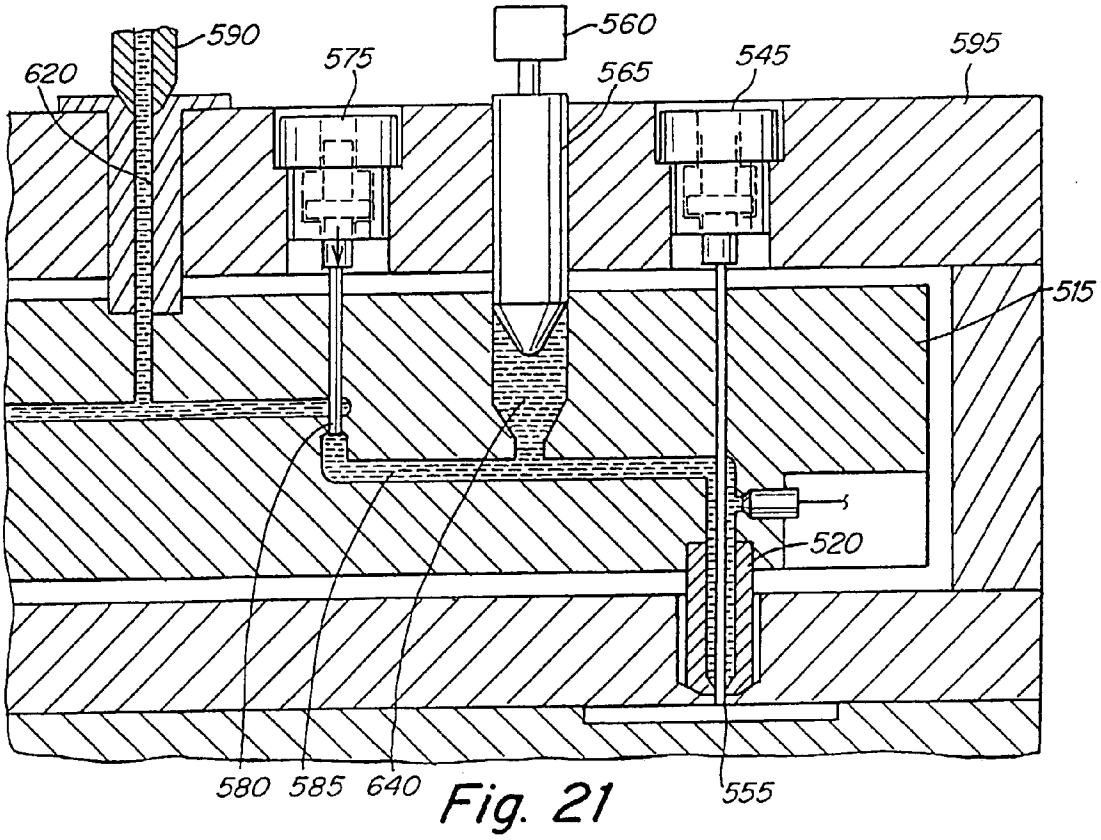
590
560
620
575
565
545
595
515
520
580
585
640
555

Fig. 21

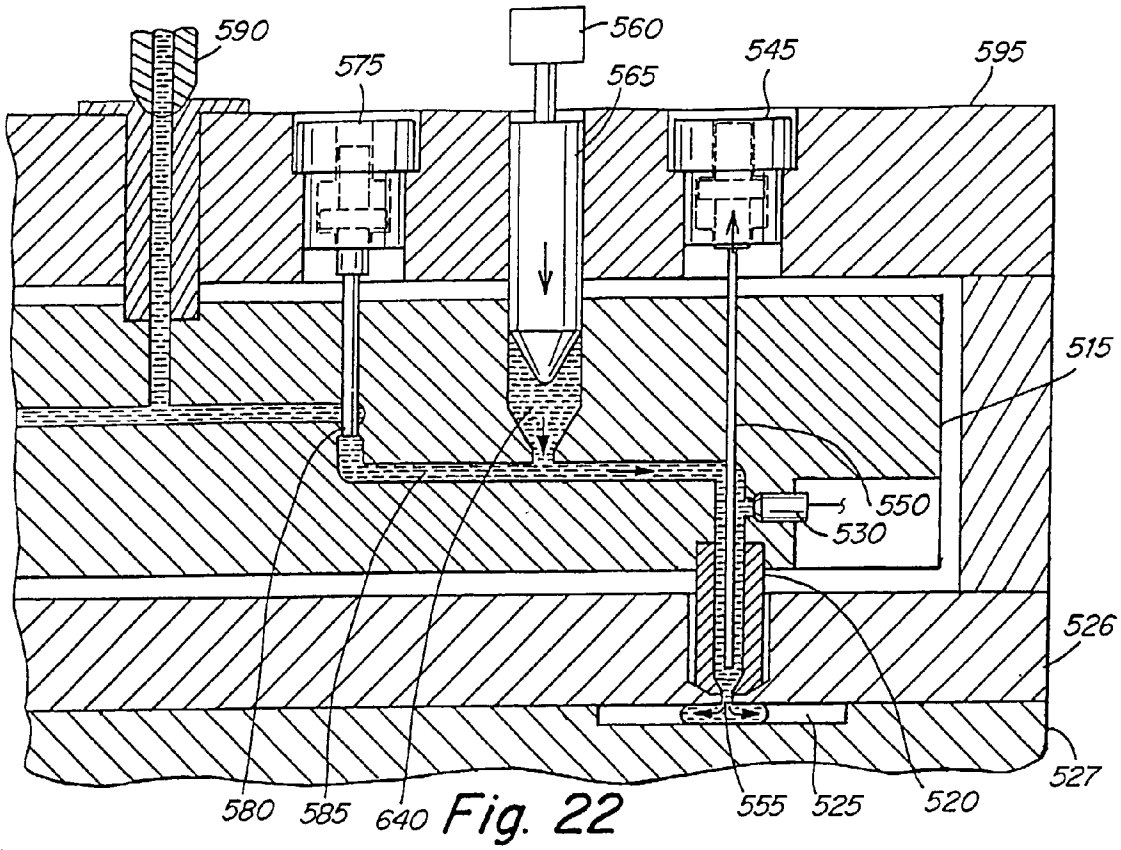
590
575
560
565
545
595
515
550
530
526
527
580
585
640
555
525
520

Fig. 22

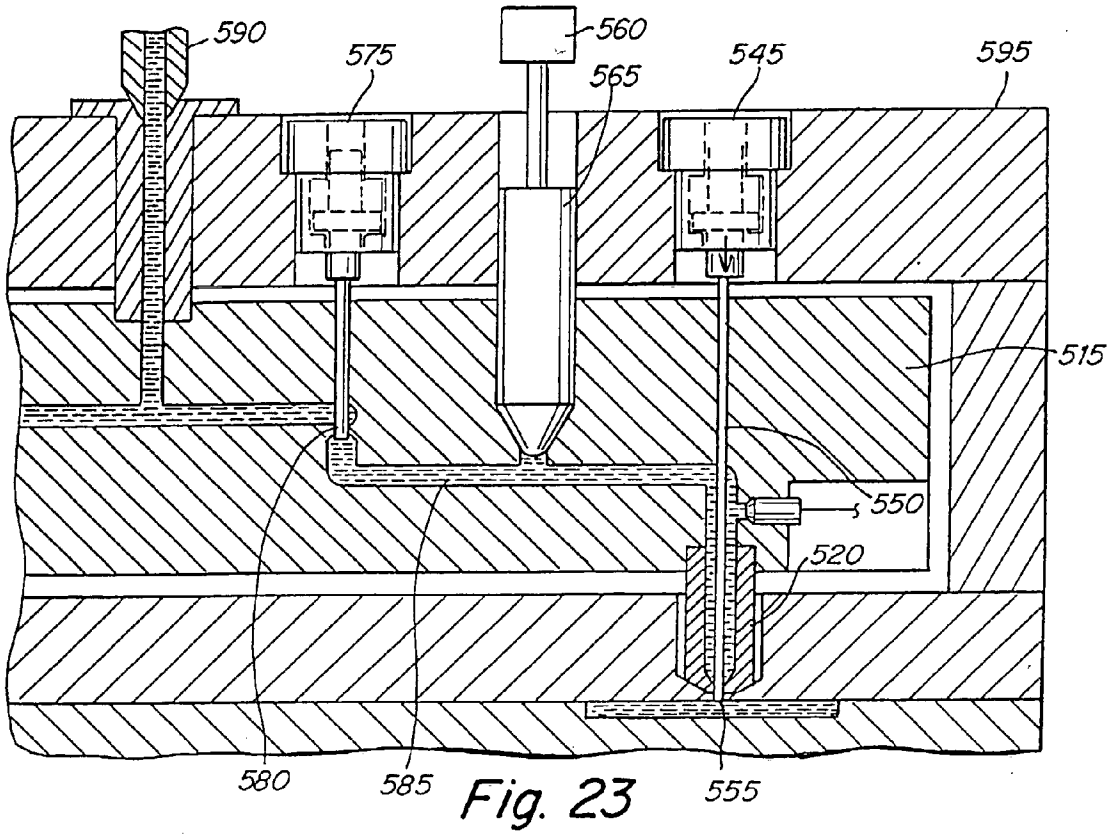
590
575
560
565
545
595
515
550
520
580
585
555

Fig. 23

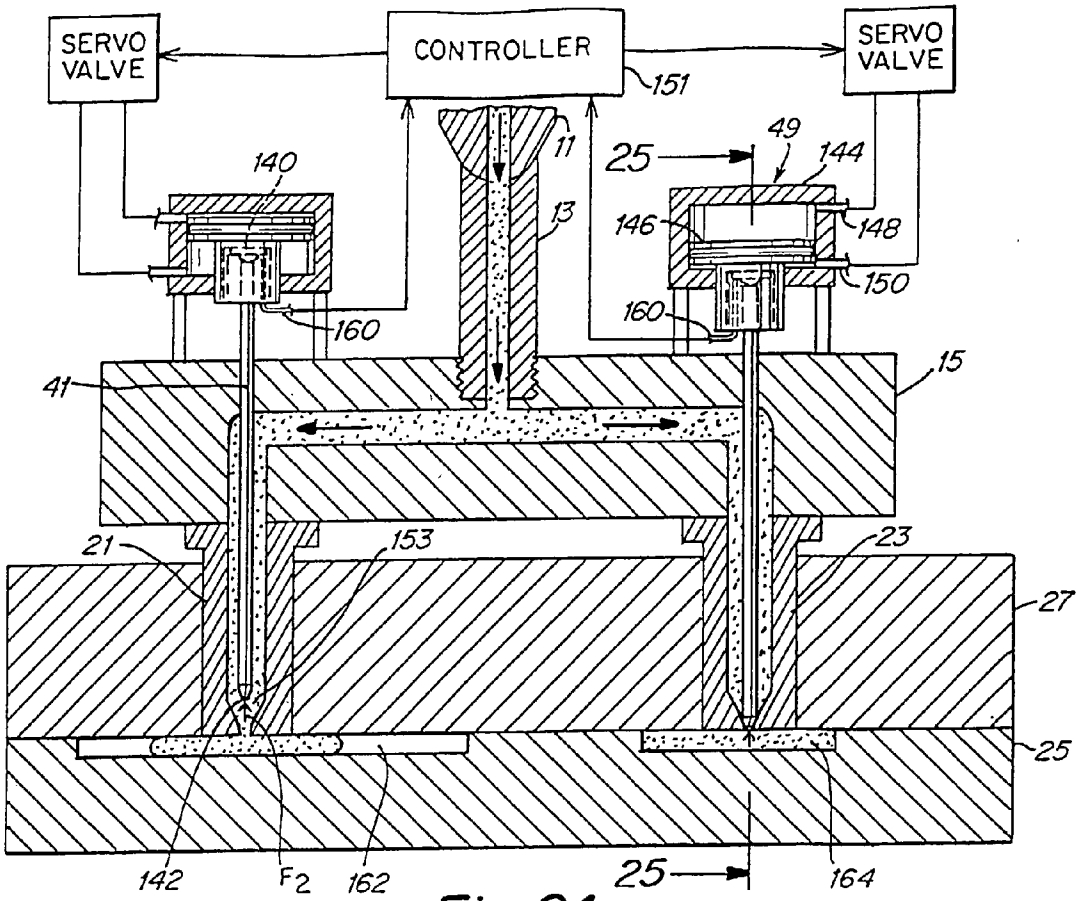
SERVO VALVE
CONTROLLER
SERVO VALVE
151
11
13
25
49
144
140
146
148
150
160
160
41
15
21
153
23
27
25
142
F2
162
25
164

Fig. 24

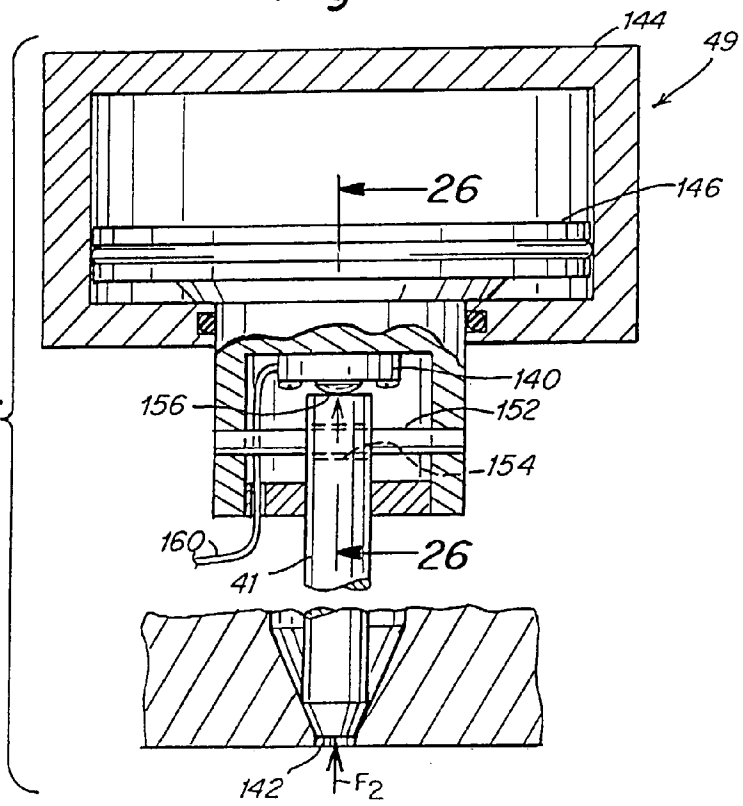
144
49
26
146
140
156
152
154
160
26
41
142
F2

Fig. 25

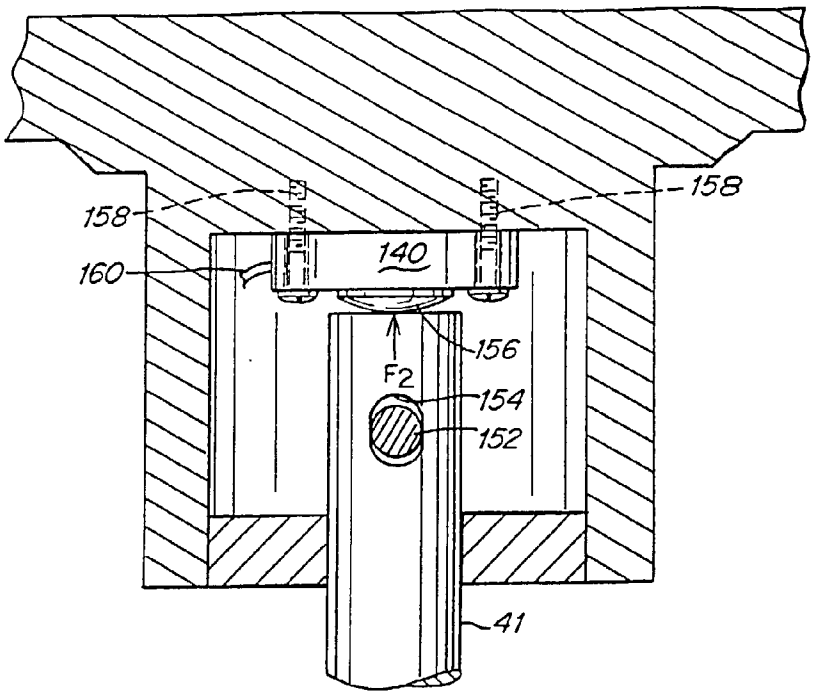

Fig. 26

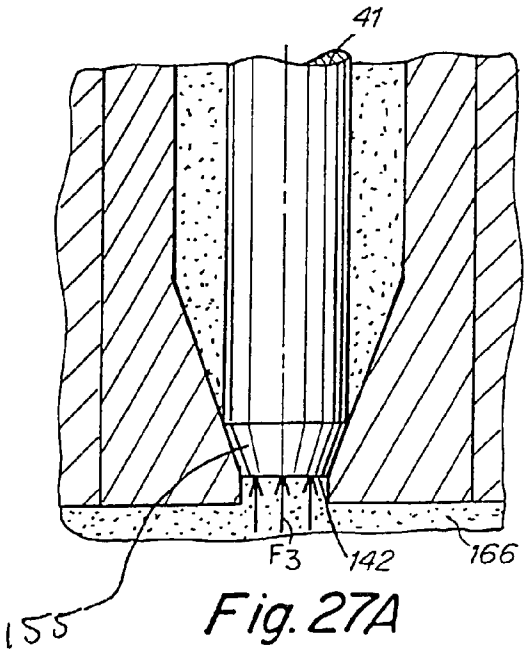

Fig. 27A

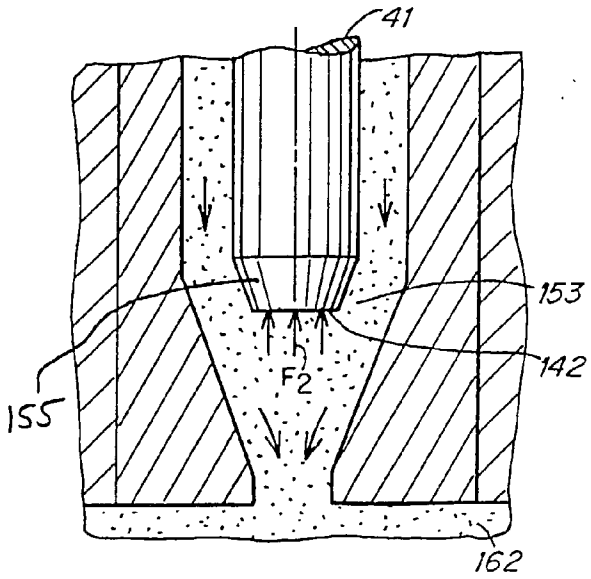

Fig. 27B

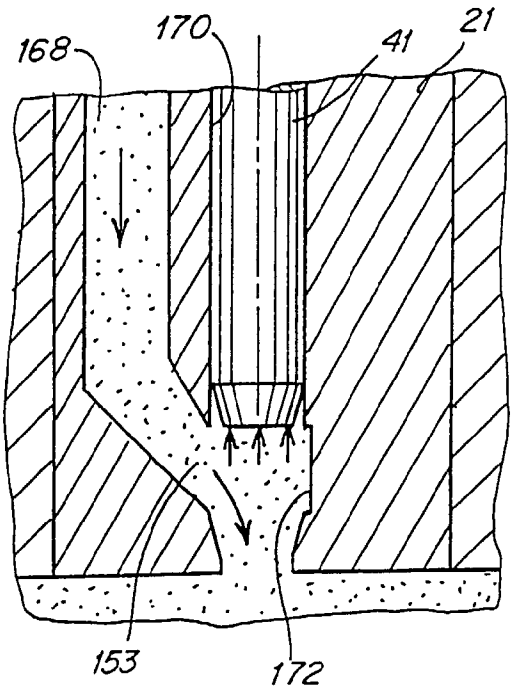

Fig. 28A

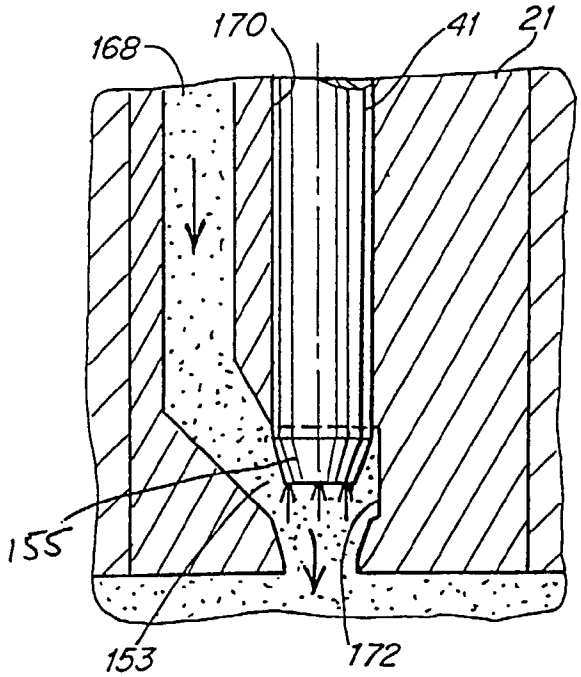

Fig. 28B

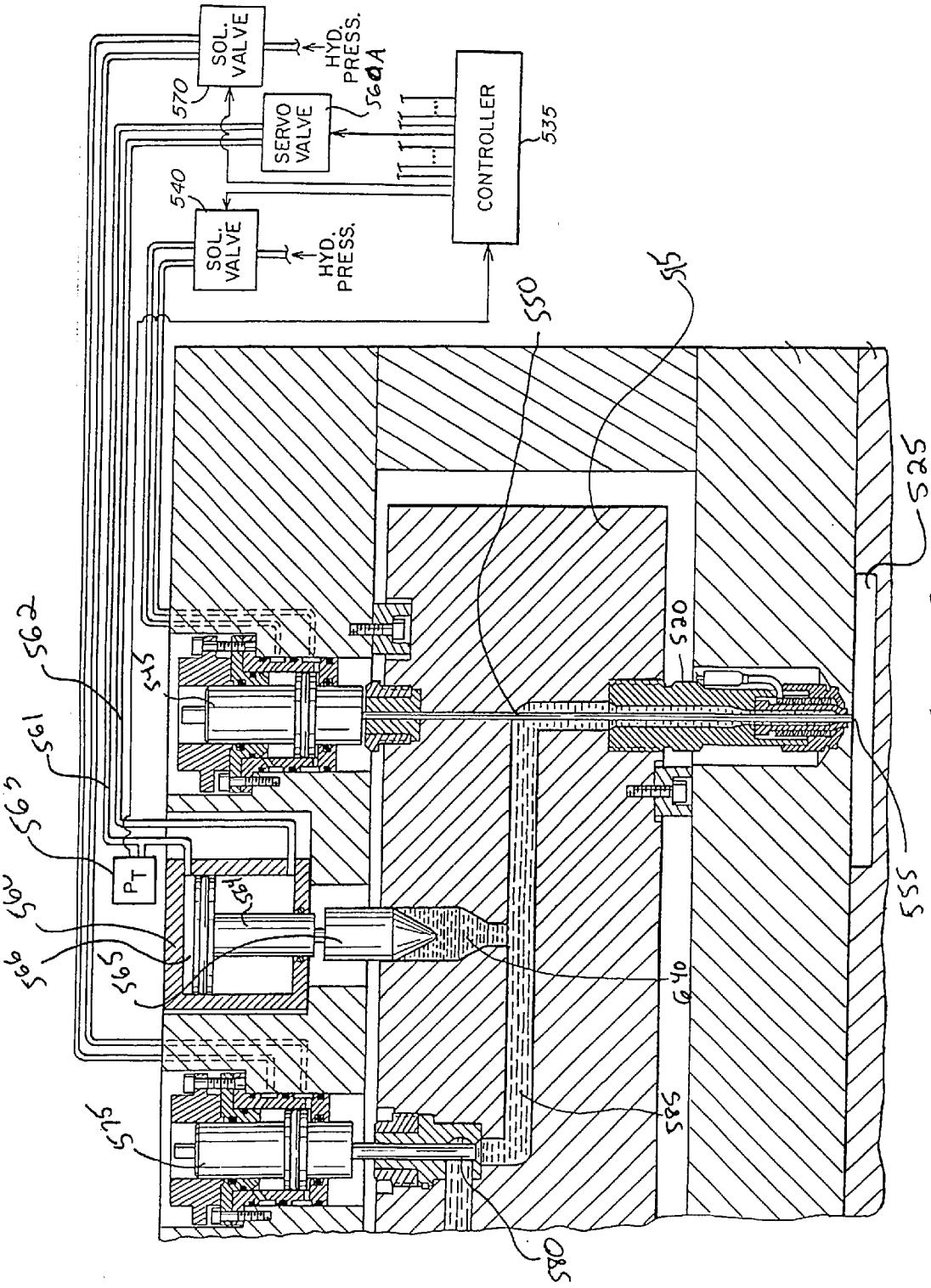
SOL. VALVE
HYD. PRESS.
570
560A
SERVO VALVE
CONTROLLER
535
540
SOL. VALVE
HYD. PRESS.
550
515
525
520
555
562
561
563
P_T
560
566
565
564
545
575
640
585
580

Fig. 29

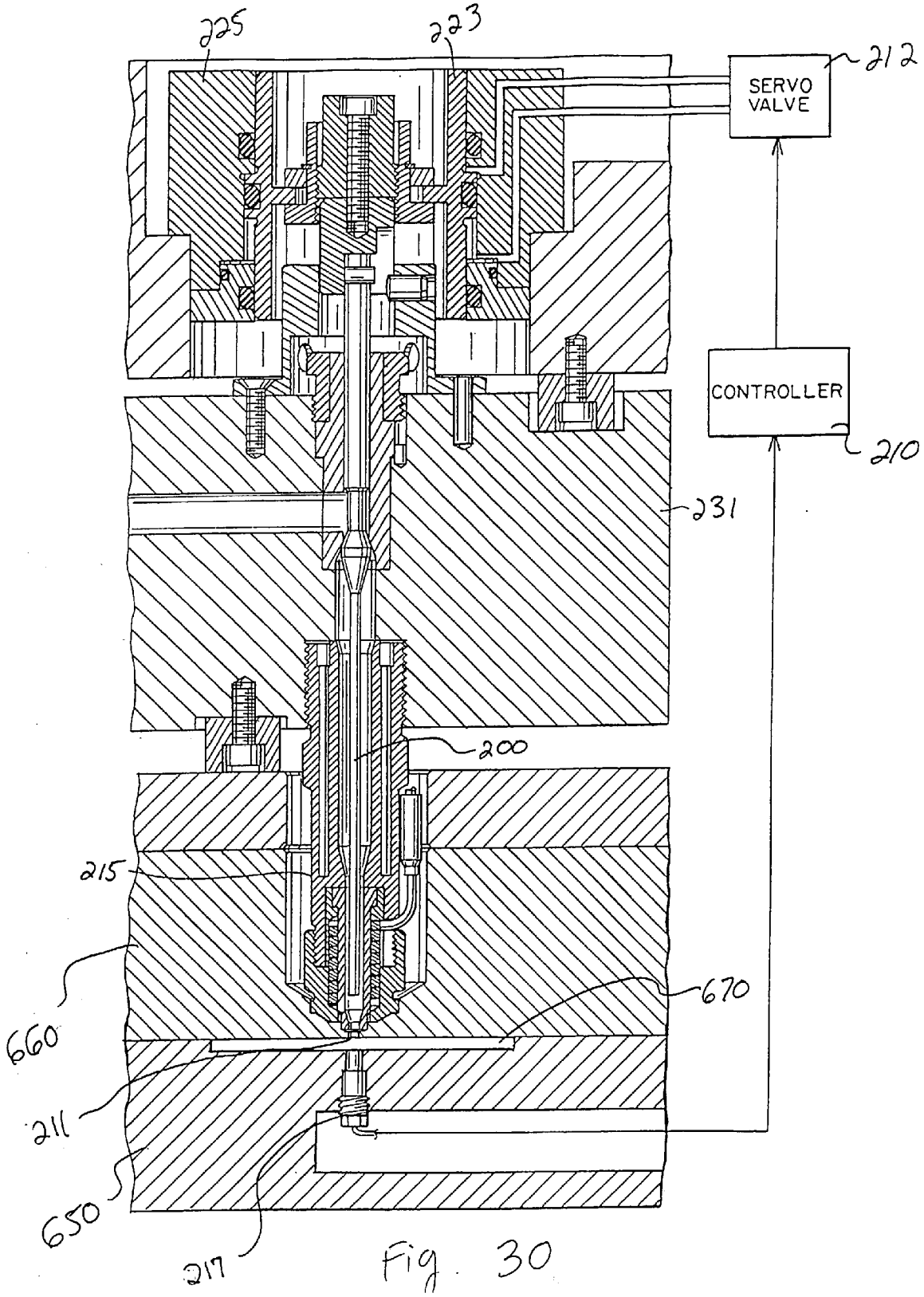
225
223
212
SERVO VALVE
CONTROLLER
210
231
200
215
660
670
211
650
217

Fig. 30

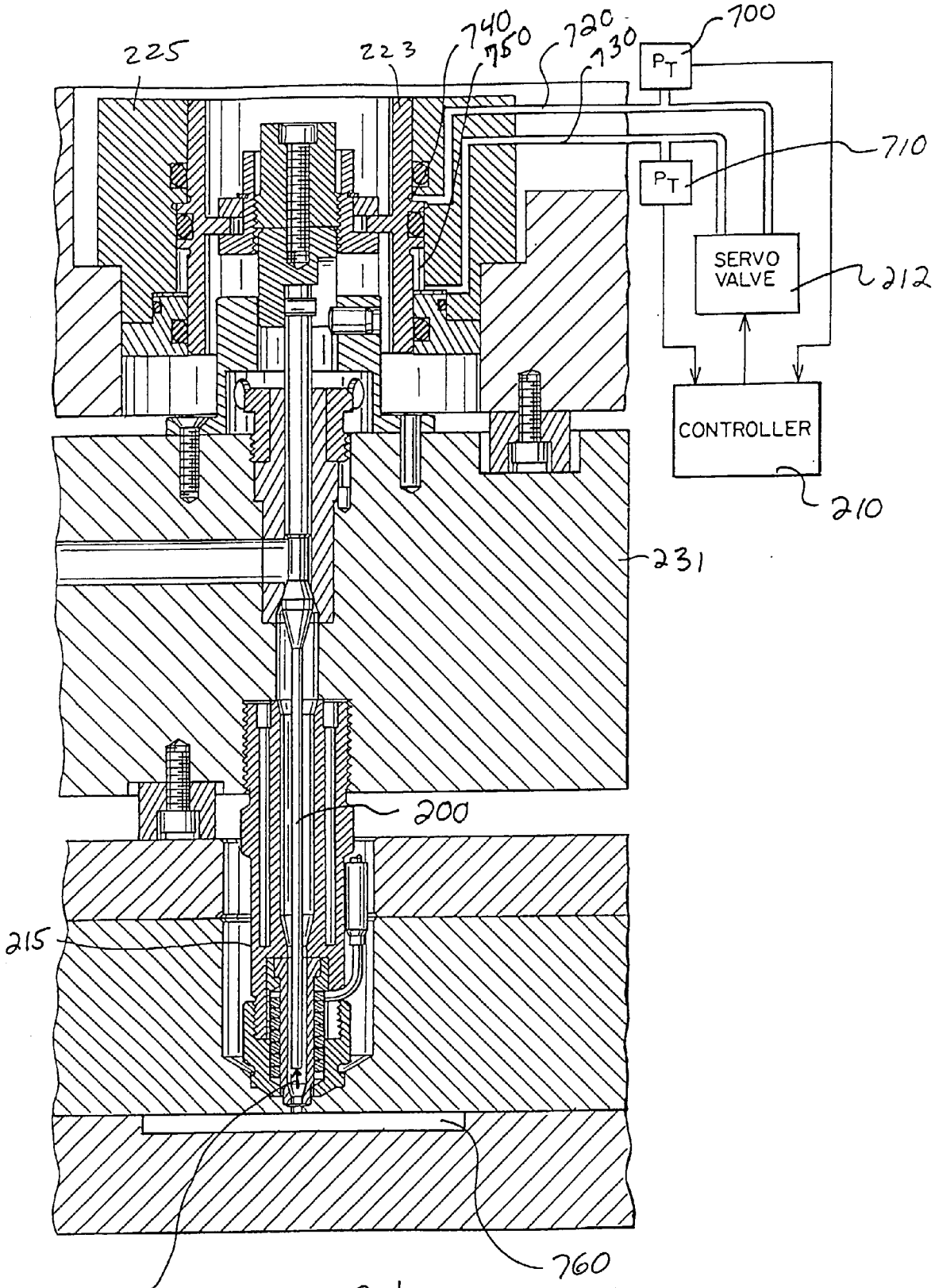
225
223
740
750
720
730
700
P_T
710
P_T
SERVO VALVE
212
CONTROLLER
210
231
200
215
760
F_2

Fig. 31

MANIFOLD SYSTEM HAVING FLOW CONTROL

RELATED APPLICATIONS

[0001] This application is a Continuation-in-Part under 35 U.S.C. §120 of U.S. application Ser. No. 09/063,762, entitled "MANIFOLD SYSTEM HAVING FLOW CONTROL", filed Apr. 21, 1998, and claims priority under 35 U.S.C. §119(e) to Provisional Application Serial No. 60/124,596, entitled "DYNAMIC FEED VALVE GATE", filed Mar. 16, 1999.

FIELD OF THE INVENTION

[0002] This invention relates to injection of pressurized materials through a manifold, such as injection molding of plastic melt in a hot runner system. More specifically, this invention relates to an improved injection molding hot runner system in which the rate of melt flow is controlled through the gate during an injection molding cycle.

DESCRIPTION OF THE RELATED ART

[0003] U.S. Pat. No. 5,556,582 discloses a multi-gate single cavity system in which the rate of melt flow through the individual gates is controlled independently via a control system according to specific target process conditions. This system enables the weld line of the part (the section of the part in which the melt from one gate meets the melt from another gate) to be selectively located. It also enables the shape of the weld line to be altered to form a stronger bond.

[0004] The '582 patent discloses controlling the rate of melt flow with a tapered valve pin at the gate to the mold cavity. It also discloses placing a pressure transducer inside the mold cavity. Placing the pressure transducer inside the mold cavity can result in the pressure transducer sensing pressure spikes which can occur when the valve pin is closed. A pressure spike sensed by the transducer can cause an unintended response from the control system, and result in a less precise control of the melt flow than desired.

[0005] The control system disclosed in the '582 patent uses the variables of valve pin position and cavity pressure to determine what position the valve pin should be in. Thus, the algorithm performed by the control system in the '582 patent utilizes two variables to control the rate of melt flow into the cavity.

SUMMARY OF THE INVENTION

[0006] An injection molding apparatus and method are provided in which the rate of material flow during an injection cycle is controlled. According to one preferred embodiment, an injection molding apparatus is provided that includes a manifold, at least one injection nozzle coupled to the manifold, an actuator, and a valve pin adapted to reciprocate through the manifold and the injection nozzle. The valve pin has a first end coupled to the actuator, a second end that closes the gate in a forward position, and a control surface intermediate said first and second ends for adjusting the rate of material flow during an injection cycle. Retracting the valve pin tends to decrease the rate of material flow during the injection cycle and displacing the valve pin toward the gate tends to increase the rate of material flow during the injection cycle.

[0007] According to another preferred embodiment, in an injection molding system having a manifold for injecting material into first and second mold cavities, respectively, and a controller for controlling the flow rate of material injected into the first and second mold cavities during an injection cycle according to first and second target profiles, respectively, wherein the first and second target profiles represent a desired value of first and second sensed conditions related to the flow rate of material injected into the first and second cavities during an injection cycle, respectively, a method is provided for creating at least the first target profile for the first mold cavity. The method includes the steps of shutting off a flow of material into the second cavity, and injecting material into the first cavity to determine what values of the first sensed condition produce an acceptable molded part in the first cavity, the values of the first sensed condition that produce an acceptable molded part constituting the first target profile.

[0008] According to another preferred embodiment, in an injection molding system having a manifold for injecting material into first and second mold cavities, respectively, and a controller for controlling the flow rate of material injected into the first and second mold cavities according to first and second target profiles, respectively, wherein each target profile represents a desired value of first and second sensed conditions related to the flow rate of material injected into the first and second cavities during an injection cycle, respectively, a method is provided for creating the first and second target profiles. The method includes the step of simultaneously injecting material into the first and second cavities; and based on the simultaneous injection of material, determining what values of the first sensed condition produce an acceptable molded part in the first mold cavity, the values of the first sensed condition that produce an acceptable molded part constituting the first target profile, and determining what values of the second sensed condition produce an acceptable molded part in the second mold cavity, the values of the second sensed condition that produce an acceptable molded part in the second mold cavity constituting the second target profile.

[0009] According to another preferred embodiment, in an injection molding system having a manifold for injecting material through first and second gates into one or more mold cavities, and a controller for controlling the flow rate of material injected through the first and second gates during an injection cycle according to first and second target profiles, respectively, wherein the first and second target profiles represent a desired value of first and second sensed conditions related to the flow rate of material injected through the first and second gates during an injection cycle, respectively, a method is provided for creating at least the first target profile, the method includes the steps of selecting a test first target profile to be executed by the controller, injecting material through the first gate into a cavity according to the test first target profile executed by the controller, and determining whether the material injected produces an acceptable molded part in the cavity.

[0010] According to another preferred embodiment, in an injection molding system having a manifold for injecting material through a first gate into a first mold cavity, and a controller for controlling the flow rate of material injected through the first gate during an injection cycle according to a first target pressure profile by comparing a target pressure

to an actual pressure during the injection cycle, wherein the first target pressure profile represents a target value of the pressure exerted by the material injected through the first gate during the injection cycle, a method is provided for creating the first target pressure profile. The method includes the steps of selecting a value of a variable corresponding to target injection pressure of the injected material, selecting a value of a variable corresponding to target pack pressure of the injected material, and selecting a value of a variable corresponding to a duration of the injection cycle.

[**0011**] According to another preferred embodiment, in an injection molding system having a manifold for injecting material through a first gate into a first mold cavity, and a controller for controlling the flow rate of material injected through the first gate during an injection cycle according to a first target pressure profile by comparing a target pressure to an actual pressure exerted by the material, a method is provided for creating the first target pressure profile. The method includes selecting pressure values for a plurality of variables corresponding to target pressures at a corresponding plurality of times during the injection cycle, and forming the first target pressure profile according to the pressure values.

[**0012**] According to another preferred embodiment, an injection molding apparatus is provided that includes a manifold for directing material through first and second gates into one or more mold cavities, and a controller to independently control a flow rate of material injected into through the first and second gates during an injection cycle according to a first target profile associated with the material injected through the first gate and a second target profile associated with material injected through the second gate. The first target profile represents target values of a first sensed condition related to the flow rate of material injected through the first gate during the injection cycle and the second target profile represents target values of a second sensed condition related to the flow rate of material injected through the second gate during the injection cycle. The apparatus further includes a graphical user interface for displaying at least the first target profile.

[**0013**] According to another preferred embodiment, an injection molding apparatus is provided that includes a manifold to direct material to first and second gates into one or more mold cavities, the manifold including first and second wells associated with each gate, a first ram to force material from the first well through the first gate, a second ram to force material from the second well through the second gate, and a controller to independently control first and second rates at which the first and second rams force material through the first and second gates and into the one or more mold cavities during an injection cycle.

[**0014**] According to another preferred embodiment, an injection molding apparatus is provided that includes a manifold to direct material into a mold cavity, a valve pin adapted to reciprocate through the manifold toward and away from the mold cavity, wherein valve pin contacts material injected into the mold cavity, and a controller to control a flow rate of material injected into the first cavity during an injection cycle based on a force exerted on the valve pin by the material.

[**0015**] According to another preferred embodiment, in an injection molding system apparatus having a manifold, at least one injection nozzle coupled to the manifold, an actuator, and a valve pin adapted to reciprocate through the manifold and the injection nozzle, the valve pin having a first end coupled to the actuator, and a second end that closes the gate, a method is provided having the steps of prior to the beginning of an injection cycle, placing the valve pin in a rearward position, moving the valve pin forward from the rearward position at the beginning of the injection cycle toward the gate to an intermediate position in which material flow is permitted, and moving the valve pin further toward the gate from the intermediate position to close the gate at the end of the injection cycle.

[**0016**] According to another preferred embodiment, in an injection molding system having a manifold to direct material to first and second gates, the manifold including first and second wells associated with each gate, a method is provided including the steps of injecting material into each of the first and second wells, injecting material from the each of the first and second wells through each of the first and second gates, and independently controlling the rates at which the material is injected from the first and second wells.

[**0017**] According to another preferred embodiment, in an injection molding system having a manifold to direct material to first and second gates which lead to one or more mold cavities, the first and second gates having first and second valve pin associated therewith, a method is provided having the steps of injecting material into the manifold, determining a first force exerted by the material on the first valve pin, and a second force exerted by the material on the second valve pin, respectively, and independently controlling the rate at which the material is injected through each of the first and second gates into the one or more mold cavities based on the first and second forces, respectively.

[**0018**] According to another preferred embodiment, in an injection molding system having a manifold to direct material to first and second gates which lead to one or more mold cavities, a method is provided that includes the steps of injecting material into the manifold, controlling in the manifold a first rate at which material is injected through the first gate into the one or more mold cavities based on a first pressure sensed in the one or more cavities, and controlling in the manifold a second rate at which material is injected through the second gate into the one or more mold cavities based on a second pressure sensed in the one or more cavities.

BRIEF DESCRIPTION OF THE DRAWINGS

[**0019**] **FIG. 1** is a partially schematic cross-sectional view of an injection molding system according to one embodiment of the present invention;

[**0020**] **FIG. 2** is an enlarged fragmentary cross-sectional view of one side of the injection molding system of **FIG. 1**;

[**0021**] **FIG. 3** is an enlarged fragmentary cross-sectional view of an alternative embodiment of a system similar to **FIG. 1**, in which a plug is used for easy removal of the valve pin;

[**0022**] **FIG. 4** is an enlarged fragmentary cross-sectional view of an alternative embodiment of a system similar to **FIG. 1**, in which a threaded nozzle is used;

[0023] **FIG. 5** is a view similar to **FIG. 4**, showing an alternative embodiment in which a plug is used for easy removal of the valve pin;

[0024] **FIG. 6** shows a fragmentary cross-sectional view of a system similar to **FIG. 1**, showing an alternative embodiment in which a forward shut-off is used;

[0025] **FIG. 7** shows an enlarged fragmentary view of the embodiment of **FIG. 6**, showing the valve pin in the open and closed positions, respectively;

[0026] **FIG. 8** is a cross-sectional view of an alternative embodiment of the present invention similar to **FIG. 6**, in which a threaded nozzle is used with a plug for easy removal of the valve pin;

[0027] **FIG. 9** is an enlarged fragmentary view of the embodiment of **FIG. 8**, in which the valve pin is shown in the open and closed positions;

[0028] **FIG. 10** is an enlarged view of an alternative embodiment of the valve pin, shown in the closed position;

[0029] **FIG. 11** is a fragmentary cross sectional view of an alternative embodiment of an injection molding system having flow control that includes a valve pin that extends to the gate;

[0030] **FIG. 12** is an enlarged fragmentary cross-sectional detail of the flow control area;

[0031] **FIG. 13** is a fragmentary cross sectional view of another alternative embodiment of an injection molding system having flow control that includes a valve pin that extends to the gate, showing the valve pin in the starting position prior to the beginning of an injection cycle;

[0032] **FIG. 14** is view of the injection molding system of **FIG. 13**, showing the valve pin in an intermediate position in which material flow is permitted;

[0033] **FIG. 15** is a view of the injection molding system of **FIG. 13**, showing the valve pin in the closed position at the end of an injection cycle; and

[0034] **FIG. 16** shows a series of graphs representing the actual pressure versus the target pressure measured in four injection nozzles coupled to a manifold as shown in **FIG. 13**;

[0035] **FIGS. 17 and 18** are screen icons displayed on interface **114** of **FIG. 13** which are used to display, create, edit, and store target profiles;

[0036] **FIG. 19** is a fragmentary cross-sectional partially schematic view of another alternative embodiment of an injection molding system having flow control in which a ram is used to inject material from a well in the manifold into the mold cavity;

[0037] **FIG. 20** is a fragmentary view of the embodiment shown in **FIG. 19** in which the well **640** is being filled by the injecting molding machine;

[0038] **FIG. 21** is a view similar to **FIG. 20** in which the well is full of material and the system is ready to inject material into the mold cavity;

[0039] **FIG. 22** is a view similar to **FIGS. 20 and 21** in which injection into the mold cavity has begun;

[0040] **FIG. 23** is a view similar to FIGS. **20-22** in which the injection cycle is complete;

[0041] **FIG. 24** is a cross-sectional partially schematic view of another alternative embodiment of an injection molding system having flow control in which a load cell behind the valve pin is used to control the flow rate in each injection nozzle;

[0042] **FIG. 25** is a enlarged fragmentary cross-sectional view of the valve pin and actuator of **FIG. 24**;

[0043] **FIG. 26** is an enlarged view of the load cell and valve pin of **FIG. 24**;

[0044] **FIGS. 27A and 27B** show an enlarged view of the tip of the valve pin closing the gate and controlling the flow rate, respectively;

[0045] **FIGS. 28A and 28B** shown an alternative structure of an injection molding nozzle for use in the system shown in **FIG. 24**;

[0046] **FIG. 29** is a cross-sectional partially schematic view of an alternative embodiment of an injection molding system having flow control similar to **FIG. 19** in which a pressure transducer is used to sense the hydraulic pressure supplied to the actuator;

[0047] **FIG. 30** shows a fragmentary cross-sectional view of an alternative embodiment of an injection molding system having flow control similar to **FIG. 13** in which the pressure transducer is mounted in the mold cavity; and

[0048] **FIG. 31** is a fragmentary cross-sectional view of an alternative embodiment of an injection molding system having flow control in which flow control is effected by measuring the differential pressure of the actuator chambers.

DETAILED DESCRIPTION

[0049] FIGS. **1-2** show one embodiment of the injection molding system according to the present invention. The injection molding system **1** is a multi-gate single cavity system in which melt material **3** is injected into a cavity **5** from gates **7** and **9**. Melt material **3** is injected from an injection molding machine **11** through an extended inlet **13** and into a manifold **15**. Manifold **15** distributes the melt through channels **17** and **19**. Although a hot runner system is shown in which plastic melt is injected, the invention is applicable to other types of injection systems in which it is useful to control the rate at which a material (e.g., metallic or composite materials) is delivered to a cavity.

[0050] Melt is distributed by the manifold through channels **17** and **19** and into bores **18** and **20** of nozzles **21** and **23**, respectively. Melt is injected out of nozzles **21** and **23** and into cavity **5** (where the part is formed) which is formed by mold plates **25** and **27**. Although a multi-gate single-cavity system is shown, the invention is not limited to this type of system, and is also applicable to, for example, multi-cavity systems, as discussed in greater detail below.

[0051] The injection nozzles **21** and **23** are received in respective wells **28** and **29** formed in the mold plate **27**. The nozzles **21** and **23** are each seated in support rings **31** and **33**. The support rings serve to align the nozzles with the gates **7** and **9** and insulate the nozzles from the mold. The manifold **15** sits atop the rear end of the nozzles and maintains sealing contact with the nozzles via compression

forces exerted on the assembly by clamps (not shown) of the injection molding machine. An **0**-ring **36** is provided to prevent melt leakage between the nozzles and the manifold. A dowel **73** centers the manifold on the mold plate **27**. Dowels **32** and **34** prevent the nozzle **23** and support ring **33**, respectively, from rotating with respect to the mold **27**.

[**0052**] The nozzles also include a heater **35** (**FIG. 2**). Although an electric band heater is shown, other heaters may be used. Furthermore, heat pipes (for example those disclosed in U.S. Pat. No. 4,389,002) may be disposed in each nozzle and used alone or in conjunction with heater **35**. The heater is used to maintain the melt material at its processing temperature up to the gates **7** and **9**. The nozzles **21** and **23** also include an insert **37** and a tip **39**. The insert can be made of a material (for example beryllium copper) having high thermal conductivity in order to maintain the melt at its processing temperature up to the gate by imparting heat to the melt from the heater **35**. The tip **39** is used to form a seal with the mold plate **27** and is preferably a material (for example titanium alloy or stainless steel) having low thermal conductivity so as to reduce heat transfer from the nozzle to the mold.

[**0053**] A valve pin **41** having a head **43** is used to control the rate of flow of the melt material to the respective gates **7** and **9**. The valve pin reciprocates through the manifold. A valve pin bushing **44** is provided to prevent melt from leaking along stem **102** of the valve pin. The valve pin bushing is held in place by a threadably mounted cap **46**. The valve pin is opened at the beginning of the injection cycle and closed at the end of the cycle. During the cycle, the valve pin can assume intermediate positions between the fully open and closed positions, in order to decrease or increase the rate of flow of the melt. The head includes a tapered portion **45** that forms a gap **81** with a surface **47** of the bore **19** of the manifold. Increasing or decreasing the size of the gap by displacing the valve pin correspondingly increases or decreases the flow of melt material to the gate. When the valve pin is closed the tapered portion **45** of the valve pin head contacts and seals with the surface **47** of the bore of the manifold.

[**0054**] **FIG. 2** shows the head of the valve pin in a Phantom dashed line in the closed position and a solid line in the fully opened position in which the melt is permitted to flow at a maximum rate. To reduce the flow of melt, the pin is retracted away from the gate by an actuator **49**, to thereby decrease the width of the gap **81** between the valve pin and the bore **19** of the manifold.

[**0055**] The actuator **49** (for example, the type disclosed in application Ser. No. 08/874,962) is mounted in a clamp plate **51** which covers the injection molding system **1**. The actuator **49** is a hydraulic actuator, however, pneumatic or electronic actuators can be used. The actuator **49** includes a hydraulic circuit that includes a movable piston **53** in which the valve pin **41** is threadably mounted at **55**. Thus, as the piston **53** moves, the valve pin **41** moves with it. The actuator **49** includes hydraulic lines **57** and **59** which are controlled by servo valves **1** and **2**. Hydraulic line **57** is energized to move the valve pin **41** toward the gate to the open position, and hydraulic line **59** is energized to retract the valve pin away from the gate toward the close position. An actuator cap **61** limits longitudinal movement in the vertical direction of the piston **53**. O-rings **63** provide respective seals to prevent hydraulic fluid from leaking out of the actuator. The actuator body **65** is mounted to the manifold via screws **67**.

[**0056**] A pressure transducer **69** is used to sense the pressure in the manifold bore **19** downstream of the valve pin head **43**. In operation, the conditions sensed by the pressure transducer **69** associated with each nozzle are fed back to a control system that includes controllers PID **1** and PID **2** and a CPU shown schematically in **FIG. 1**. The CPU executes a PID (proportional, integral, derivative) algorithm which compares the sensed pressure (at a given time) from the pressure transducer to a programmed target pressure (for the given time). The CPU instructs the PID controller to adjust the valve pin using the actuator **49** in order to mirror the target pressure for that given time. In this way a programmed target pressure profile for an injection cycle for a particular part for each gate **7** and **9** can be followed.

[**0057**] Although in the disclosed embodiment the sensed condition is pressure, other sensed conditions can be used which relate to melt flow rate. For example, the position of the valve pin or the load on the valve pin could be the sensed condition. If so, a position sensor or load sensor, respectively, could be used to feed back the sensed condition to the PID controller. In the same manner as explained above, the CPU would use a PID algorithm to compare the sensed condition to a programmed target position profile or load profile for the particular gate to the mold cavity, and adjust the valve pin accordingly.

[**0058**] Melt flow rate is directly related to the pressure sensed in bore **19**. Thus, using the controllers PID **1** and PID **2**, the rate at which the melt flows into the gates **7** and **9** can be adjusted during a given injection molding cycle, according to the desired pressure profile. The pressure (and rate of melt flow) is decreased by retracting the valve pin and decreasing the width of the gap **81** between the valve pin and the manifold bore, while the pressure (and rate of melt flow) is increased by displacing the valve pin toward the gate **9**, and increasing the width of the gap **81**. The PID controllers adjust the position of the actuator piston **51** by sending instructions to servo valves **1** and **2**.

[**0059**] By controlling the pressure in a single cavity system (as shown in **FIG. 1**) it is possible to adjust the location and shape of the weld line formed when melt flow **75** from gate **7** meets melt flow **77** from gate **9** as disclosed in U.S. Pat. No. 5,556,582. However, the invention also is useful in a multi-cavity system. In a multi-cavity system the invention can be used to balance fill rates and packing profiles in the respective cavities. This is useful, for example, when molding a plurality of like parts in different cavities. In such a system, to achieve a uniformity in the parts, the fill rates and packing profiles of the cavities should be as close to identical as possible. Using the same programmed pressure profile for each nozzle, unpredictable fill rate variations from cavity to cavity are overcome, and consistently uniform parts are produced from each cavity.

[**0060**] Another advantage of the present invention is seen in a multi-cavity system in which the nozzles are injecting into cavities which form different sized parts that require different fill rates and packing profiles. In this case, different pressure profiles can be programmed for each respective controller of each respective cavity. Still another advantage is when the size of the cavity is constantly changing, i.e.,

when making different size parts by changing a mold insert in which the part is formed. Rather than change the hardware (e.g., the nozzle) involved in order to change the fill rate and packing profile for the new part, a new program is chosen by the user corresponding to the new part to be formed.

[0061] The embodiment of **FIGS. 1 and 2** has the advantage of controlling the rate of melt flow away from the gate inside manifold **15** rather than at the gates **7** and **9**. Controlling the melt flow away from the gate enables the pressure transducer to be located away from the gate (in FIGS. **1-5**). In this way, the pressure transducer does not have to be placed inside the mold cavity, and is not susceptible to pressure spikes which can occur when the pressure transducer is located in the mold cavity or near the gate. Pressure spikes in the mold cavity result from the valve pin being closed at the gate. This pressure spike could cause an unintended response from the control system, for example, an opening of the valve pin to reduce the pressure—when the valve pin should be closed.

[0062] Avoidance of the effects of a pressure spike resulting from closing the gate to the mold makes the control system behave more accurately and predictably. Controlling flow away from the gate enables accurate control using only a single sensed condition (e.g., pressure) as a variable. The '582 patent disclosed the use of two sensed conditions (valve position and pressure) to compensate for an unintended response from the pressure spike. Sensing two conditions resulted in a more complex control algorithm (which used two variables) and more complicated hardware (pressure and position sensors).

[0063] Another advantage of controlling the melt flow away from the gate is the use of a larger valve pin head **43** than would be used if the valve pin closed at the gate. A larger valve pin head can be used because it is disposed in the manifold in which the melt flow bore **19** can be made larger to accommodate the larger valve pin head. It is generally undesirable to accommodate a large size valve pin head in the gate area within the end of the nozzle **23**, tip **39** and insert **37**. This is because the increased size of the nozzle, tip and insert in the gate area could interfere with the construction of the mold, for example, the placement of water lines within the mold which are preferably located close to the gate. Thus, a larger valve pin head can be accommodated away from the gate.

[0064] The use of a larger valve pin head enables the use of a larger surface **45** on the valve pin head and a larger surface **47** on the bore to form the control gap **81**. The more "control" surface (**45** and **47**) and the longer the "control" gap (**81**)—the more precise control of the melt flow rate and pressure can be obtained because the rate of change of melt flow per movement of the valve pin is less. In FIGS. **1-3** the size of the gap and the rate of melt flow is adjusted by adjusting the width of the gap, however, adjusting the size of the gap and the rate of material flow can also be accomplished by changing the length of the gap, i.e., the longer the gap the more flow is restricted. Thus, changing the size of the gap and controlling the rate of material flow can be accomplished by changing the length or width of the gap.

[0065] The valve pin head includes a middle section **83** and a forward cone shaped section **95** which tapers from the middle section to a point **85**. This shape assists in facilitating uniform melt flow when the melt flows past the control gap **81**. The shape of the valve pin also helps eliminates dead spots in the melt flow downstream of the gap **81**.

[0066] **FIG. 3** shows another aspect in which a plug **87** is inserted in the manifold **15** and held in place by a cap **89**. A dowel **86** keeps the plug from rotating in the recess of the manifold that the plug is mounted. The plug enables easy removal of the valve pin **41** without disassembling the manifold, nozzles and mold. When the plug is removed from the manifold, the valve pin can be pulled out of the manifold where the plug was seated since the diameter of the recess in the manifold that the plug was in is greater than the diameter of the valve pin head at its widest point. Thus, the valve pin can be easily replaced without significant downtime.

[0067] **FIGS. 4 and 5** show additional alternative embodiments of the invention in which a threaded nozzle style is used instead of a support ring nozzle style. In the threaded nozzle style, the nozzle **23** is threaded directly into manifold **15** via threads **91**. Also, a coil heater **93** is used instead of the band heater shown in FIGS. **1-3**. The threaded nozzle style is advantageous in that it permits removal of the manifold and nozzles (**21** and **23**) as a unitary element. There is also less of a possibility of melt leakage where the nozzle is threaded on the manifold. The support ring style (FIGS. **1-3**) is advantageous in that one does not need to wait for the manifold to cool in order to separate the manifold from the nozzles. **FIG. 5** also shows the use of the plug **87** for convenient removal of valve pin **41**.

[0068] FIGS. **6-10** show an alternative embodiment of the invention in which a "forward" shutoff is used rather than a retracted shutoff as shown in FIGS. **1-5**. In the embodiment of **FIGS. 6 and 7**, the forward cone-shaped tapered portion **95** of the valve pin head **43** is used to control the flow of melt with surface **97** of the inner bore **20** of nozzle **23**. An advantage of this arrangement is that the valve pin stem **102** does not restrict the flow of melt as in FIGS. **1-5**. As seen in FIGS. **1-5**, the clearance **100** between the stem **102** and the bore **19** of the manifold is not as great as the clearance **100** in **FIGS. 6 and 7**. The increased clearance **100** in FIGS. **6-7** results in a lesser pressure drop and less shear on the plastic.

[0069] In **FIGS. 6 and 7** the control gap **98** is formed by the front cone-shaped portion **95** and the surface **97** of the bore **20** of the rear end of the nozzle **23**. The pressure transducer **69** is located downstream of the control gap—thus, in **FIGS. 6 and 7**, the nozzle is machined to accommodate the pressure transducer as opposed to the pressure transducer being mounted in the manifold as in FIGS. **1-5**.

[0070] **FIG. 7** shows the valve pin in solid lines in the open position and Phantom dashed lines in the closed position. To restrict the melt flow and thereby reduce the melt pressure, the valve pin is moved forward from the open position towards surface **97** of the bore **20** of the nozzle which reduces the width of the control gap **98**. To increase the flow of melt the valve pin is retracted to increase the size of the gap **98**.

[0071] The rear **45** of the valve pin head **43** remains tapered at an angle from the stem **102** of the valve pin **41**. Although the surface **45** performs no sealing function in this embodiment, it is still tapered from the stem to facilitate even melt flow and reduce dead spots.

[0072] As in FIGS. **1-5**, pressure readings are fed back to the control system (CPU and PID controller), which can accordingly adjust the position of the valve pin **41** to follow a target pressure profile. The forward shut-off arrangement shown in **FIGS. 6 and 7** also has the advantages of the embodiment shown in FIGS. **1-5** in that a large valve pin head **43** is used to create a long control gap **98** and a large control surface **97**. As stated above, a longer control gap and greater control surface provides more precise control of the pressure and melt flow rate.

[0073] **FIGS. 8 and 9** show a forward shutoff arrangement similar to **FIGS. 6 and 7**, but instead of shutting off at the rear of the nozzle **23**, the shut-off is located in the manifold at surface **101**. Thus, in the embodiment shown in **FIGS. 8 and 9**, a conventional threaded nozzle **23** may be used with a manifold **15**, since the manifold is machined to accommodate the pressure transducer **69** as in FIGS. **1-5**. A spacer **88** is provided to insulate the manifold from the mold. This embodiment also includes a plug **87** for easy removal of the valve pin head **43**.

[0074] **FIG. 10** shows an alternative embodiment of the invention in which a forward shutoff valve pin head is shown as used in FIGS. **6-9**. However, in this embodiment, the forward cone-shaped taper **95** on the valve pin includes a raised section **103** and a recessed section **104**. Ridge **105** shows where the raised portion begins and the recessed section ends. Thus, a gap **107** remains between the bore **20** of the nozzle through which the melt flows and the surface of the valve pin head when the valve pin is in the closed position. Thus, a much smaller surface **109** is used to seal and close the valve pin. The gap **107** has the advantage in that it assists opening of the valve pin which is subjected to a substantial force F from the melt when the injection machine begins an injection cycle. When injection begins melt will flow into gap **107** and provide a force component F1 that assists the actuator in retracting and opening the valve pin. Thus, a smaller actuator, or the same actuator with less hydraulic pressure applied, can be used because it does not need to generate as much force in retracting the valve pin. Further, the stress forces on the head of the valve pin are reduced.

[0075] Despite the fact that the gap **107** performs no sealing function, its width is small enough to act as a control gap when the valve pin is open and correspondingly adjust the melt flow pressure with precision as in the embodiments of FIGS. **1-9**.

[0076] **FIGS. 11 and 12** show an alternative hot-runner system having flow control in which the control of melt flow is still away from the gate as in previous embodiments. Use of the pressure transducer **69** and PID control system is the same as in previous embodiments. In this embodiment, however, the valve pin **41** extends past the area of flow control via extension **110** to the gate. The valve pin is shown in solid lines in the fully open position and in Phantom dashed lines in the closed position. In addition to the flow control advantages away from the gate described above, the extended valve pin has the advantage of shutting off flow at the gate with a tapered end **112** of the valve pin **41**.

[0077] Extending the valve pin to close the gate has several advantages. First, it shortens injection cycle time. In previous embodiments thermal gating is used. In thermal gating, plastication does not begin until the part from the previous cycle is ejected from the cavity. This prevents material from exiting the gate when the part is being ejected. When using a valve pin, however, plastication can be performed simultaneously with the opening of the mold when the valve pin is closed, thus shortening cycle time by beginning plastication sooner. Using a valve pin can also result in a smoother gate surface on the part.

[0078] The flow control area is shown enlarged in **FIG. 12**. In solid lines the valve pin is shown in the fully open position in which maximum melt flow is permitted. The valve pin includes a convex surface **114** that tapers from edge **128** of the stem **102** of the valve pin **41** to a throat area **116** of reduced diameter. From throat area **116**, the valve pin expands in diameter in section **118** to the extension **110** which extends in a uniform diameter to the tapered end of the valve pin.

[0079] In the flow control area the manifold includes a first section defined by a surface **120** that tapers to a section of reduced diameter defined by surface **122**. From the section of reduced diameter the manifold channel then expands in diameter in a section defined by surface **124** to an outlet of the manifold **126** that communicates with the bore of the nozzle **20**. **FIGS. 11 and 12** show the support ring style nozzle similar to FIGS. **1-3**. However, other types of nozzles may be used such as, for example, a threaded nozzle as shown in **FIG. 8**.

[0080] As stated above, the valve pin is shown in the fully opened position in solid lines. In **FIG. 12**, flow control is achieved and melt flow reduced by moving the valve pin **41** forward toward the gate thereby reducing the width of the control gap **98**. Thus, surface **114** approaches surface **120** of the manifold to reduce the width of the control gap and reduce the rate of melt flow through the manifold to the gate.

[0081] To prevent melt flow from the manifold bore **19**, and end the injection cycle, the valve pin is moved forward so that edge **128** of the valve pin, i.e., where the stem **102** meets the beginning of curved surface **114**, will move past point **130** which is the beginning of surface **122** that defines the section of reduced diameter of the manifold bore **19**. When edge **128** extends past point **130** of the manifold bore melt flow is prevented since the surface of the valve stem **102** seals with surface **122** of the manifold. The valve pin is shown in dashed lines where edge **128** is forward enough to form a seal with surface **122**. At this position, however, the valve pin is not yet closed at the gate. To close the gate the valve pin moves further forward, with the surface of the stem **102** moving further along, and continuing to seal with, surface **122** of the manifold until the end **112** of the valve pin closes with the gate.

[0082] In this way, the valve pin does not need to be machined to close the gate and the flow bore **19** of the manifold simultaneously, since stem **102** forms a seal with surface **122** before the gate is closed. Further, because the valve pin is closed after the seal is formed in the manifold, the valve pin closure will not create any unwanted pressure spikes. Likewise, when the valve pin is opened at the gate, the end **112** of the valve pin will not interfere with melt flow, since once the valve pin is retracted enough to permit melt flow through gap **98**, the valve pin end **112** is a predetermined distance from the gate. The valve pin can, for example, travel 6 mm. from the fully open position to where a seal is first created between stem **102** and surface **122**, and

another 6 mm. to close the gate. Thus, the valve pin would have 12 mm. of travel, 6 mm. for flow control, and 6 mm. with the flow prevented to close the gate. Of course, the invention is not limited to this range of travel for the valve pin, and other dimensions can be used.

[**0083**] FIGS. **13-15** show another alternative hot runner system having flow control in which the control of material flow is away from the gate. Like the embodiment shown in **FIGS. 11 and 12**, the embodiment shown in FIGS. **13-15** also utilizes an extended valve pin design in which the valve pin closes the gate after completion of material flow. Unlike the embodiment of **FIGS. 11 and 12**, however, flow control is performed using a "reverse taper" pin design, similar to the valve pin design shown in FIGS. **1-5**.

[**0084**] The valve pin **200** includes a reverse tapered control surface **205** for forming a gap **207** with a surface **209** of the manifold (see **FIG. 14**). The action of displacing the pin **200** away from the gate **211** reduces the size of the gap **207**. Consequently, the rate of material flow through bores **208** and **214** of nozzle **215** and manifold **231**, respectively, is reduced, thereby reducing the pressure measured by the pressure transducer **217**. Although only one nozzle **215** is shown, manifold **231** supports two or more like nozzle arrangements shown in FIGS. **13-15**, each nozzle for injecting into a single or multiple cavities.

[**0085**] The valve pin **200** reciprocates by movement of piston **223** disposed in an actuator body **225**. This actuator is described in co-pending application Ser. No. 08/874,962. As disclosed in that application, the use of this actuator enables easy access to valve pin **200** in that the actuator body **225** and piston **223** can be removed from the manifold and valve pin simple by releasing retaining ring **240**.

[**0086**] The reverse closure method offers an advantage over the forward closure method shown in FIGS. **6-9**, **11** and **12**, in that the action of the valve pin **200** moving away from the gate acts to displace material away from the gate, thereby assisting in the desired effect of decreasing flow rate and pressure.

[**0087**] In the forward closure method shown in FIGS. **6-9**, forward movement of the pin is intended to reduce the control gap between the pin and the manifold (or nozzle) bore surface to thereby decrease flow rate and pressure. However, forward movement of the pin also tends to displace material toward the gate and into the cavity, thereby increasing pressure, working against the intended action of the pin to restrict flow.

[**0088**] Like the embodiment shown in FIGS. **6-9**, and the embodiment shown in **FIGS. 11 and 12**, movement of the valve pin away from the gate is also intended to increase the flow rate and pressure. This movement, however, also tends to displace material away from the gate and decrease pressure. Accordingly, although either design can be used, the reverse taper design has been found to give better control stability in tracking the target pressure.

[**0089**] The embodiment shown in FIGS. **13-15** also includes a tip heater **219** disposed about an insert **221** in the nozzle. The tip heater provides extra heat at the gate to keep the material at its processing temperature. The foregoing tip heater is described in U.S. Pat. No. 5,871,786, entitled "Tip Heated Hot Runner Nozzle." Heat pipes **242** are also provided to conduct heat uniformly about the injection nozzle **215** and to the tip area. Heat pipes such as these are described in U.S. Pat. No. 4,389,002.

[**0090**] FIGS. **13-15** show the valve pin in three different positions. **FIG. 13** represents the position of the valve pin at the start of an injection cycle. Generally, an injection cycle includes: 1) an injection period during which substantial pressure is applied to the melt stream from the injection molding machine to inject the material in the mold cavity; 2) a reduction of the pressure from the injection molding machine in which melt material is packed into the mold cavity at a relatively constant pressure; and 3) a cooling period in which the pressure decreases to zero and the article in the mold solidifies.

[**0091**] Just prior to the start of injection, tapered control surface **205** is in contact with manifold surface **209** to prevent any material flow. At the start of injection the pin **200** will be opened to allow material flow. To start the injection cycle the valve pin **200** is displaced toward the gate to permit material flow, as shown in **FIG. 14**. (Note: for some applications, not all the pins will be opened initially, for some gates pin opening will be varied to sequence the fill into either a single cavity or multiple cavities). **FIG. 15** shows the valve pin at the end of the injection cycle after pack. The part is ejected from the mold while the pin is in the position shown in **FIG. 15**.

[**0092**] As in previous embodiments, pin position will be controlled by a controller **210** based on pressure readings fed to the controller from pressure sensor **217**. In a preferred embodiment, the controller is a programmable controller, or "PLC," for example, model number 90-30PLC manufactured by GE-Fanuc. The controller compares the sensed pressure to a target pressure and adjusts the position of the valve pin via servo valve **212** to track the target pressure, displacing the pin forward toward the gate to increase material flow (and pressure) and withdrawing the pin away from the gate to decrease material flow (and pressure). In a preferred embodiment, the controller performs this comparison and controls pin position according to a PID algorithm. Furthermore, as an alternative, valve **212** can also be a high speed proportional valve.

[**0093**] The controller also performs these functions for the other injection nozzles (not shown) coupled to the manifold **231**. Associated with each of these nozzles is a valve pin or some type of control valve to control the material flow rate, a pressure transducer, an input device for reading the output signal of the pressure transducer, means for signal comparison and PID calculation (e.g., the controller **210**), means for setting, changing and storing a target profile (e.g., interface **214**), an output means for controlling a servo valve or proportional valve, and an actuator to move the valve pin. The actuator can be pneumatic, hydraulic or electric. The foregoing components associated with each nozzle to control the flow rate through each nozzle are called a control zone or axis of control. Instead of a single controller used to control all control zones, alternatively, individual controllers can be used in a single control zone or group of control zones.

[**0094**] An operator interface **214**, for example, a personal computer, is used to program a particular target pressure profile into controller **210**. Although a personal computer is used, the interface **214** can be any appropriate graphical or alpha numeric display, and could be directly mounted to the controller. As in previous embodiments, the target profile is selected for each nozzle and gate associated therewith by

pre-selecting a target profile (preferably including at least parameters for injection pressure, injection time, pack pressure and pack time), programming the target profile into controller **210**, and running the process.

[**0095**] In the case of a multicavity application in which different parts are being produced in independent cavities associated with each nozzle (a "family tool" mold), it is preferable to create each target profile separately, since different shaped and sized cavities can have different profiles which produce good parts.

[**0096**] For example, in a system having a manifold with four nozzles coupled thereto for injecting into four separate cavities, to create a profile for a particular nozzle and cavity, three of the four nozzles are shut off while the target profile is created for the fourth. Three of the four nozzles are shut off by keeping the valve pins in the position shown in **FIG. 13** or **15** in which no melt flow is permitted into the cavity.

[**0097**] To create the target profile for the particular nozzle and cavity associated therewith, the injection molding machine is set at maximum injection pressure and screw speed, and parameters relating to the injection pressure, injection time, pack pressure and pack time are set on the controller **210** at values that the molder estimates will generate good parts based on part size, shape, material being used, experience, etc. Injection cycles are run for the selected nozzle and cavity, with alterations being made to the above parameters depending on the condition of the part being produced. When satisfactory parts are produced, the profile that produced the satisfactory parts is determined for that nozzle and cavity associated therewith.

[**0098**] This process is repeated for all four nozzles (keeping three valve pins closed while the selected nozzle is profiled) until target profiles are ascertained for each nozzle and cavity associated therewith. Preferably, the acceptable target profiles are stored in computer member, for example, on a file stored in interface **214** and used by controller **210** for production. The process can then be run for all four cavities using the four particularized profiles.

[**0099**] Of course, the foregoing process of profile creation is not limited to use with a manifold having four nozzles, but can be used with any number of nozzles. Furthermore, although it is preferable to profile one nozzle and cavity at a time (while the other nozzles are closed) in a "family tool" mold application, the target profiles can also be created by running all nozzles simultaneously, and similarly adjusting each nozzle profile according the quality of the parts produced. This would be preferable in an application where all the nozzles are injecting into like cavities, since the profiles should be similar, if not the same, for each nozzle and cavity associated therewith.

[**0100**] In single cavity applications (where multiple nozzles from a manifold are injecting into a single cavity), the target profiles would also be created by running the nozzles at the same time and adjusting the profiles for each nozzle according to the quality of the part being produced. The system can also be simplified without using interface **214**, in which each target profile can be stored on a computer readable medium in controller **210**, or the parameters can be set manually on the controller.

[**0101**] **FIG. 14** shows the pin position in a position that permits material flow during injection and/or pack. As described above, when the target profile calls for an increase in pressure, the controller will cause the valve pin **200** to move forward to increase gap **207**, which increases material flow, which increases the pressure sensed by pressure transducer **217**. If the injection molding machine is not providing adequate pressure (i.e., greater than the target pressure), however, moving the pin forward will not increase the pressure sensed by transducer **217** enough to reach the target pressure, and the controller will continue to move the pin forward calling for an increase in pressure. This could lead to a loss of control since moving the pin further forward will tend to cause the head **227** of the valve pin to close the gate and attenuate material flow through and about the gate.

[**0102**] Accordingly, to prevent loss of control due to inadequate injection pressure, the output pressure of the injection molding machine can be monitored to alert an operator when the pressure drops below a particular value relative to the target pressure. Alternatively, the forward stroke of the valve pin (from the position in **FIG. 13** to the position in **FIG. 14**) can be limited during injection and pack. In a preferred embodiment, the pin stroke is limited to approximately 4 millimeters. Greater or smaller ranges of pin movement can be used depending on the application. If adequate injection pressure is not a problem, neither of these safeguards is necessary.

[**0103**] To prevent the movement of the valve pin too far forward during injection and pack several methods can be used. For example, a control logic performed by the controller **210** can be used in which the output signal from the controller to the servo valve is monitored. Based on this signal, an estimate of the valve pin position is made. If the valve pin position exceeds a desired maximum, for example, 4 millimeters, then the forward movement of the pin is halted, or reversed slightly away from the gate. At the end of the injection cycle, the control logic is no longer needed, since the pin is moved to the closed position of **FIG. 15** and attenuation of flow is no longer a concern. Thus, at the end of the pack portion of the injection cycle, a signal is sent to the servo valve to move the pin forward to the closed position of **FIG. 15**.

[**0104**] Other methods and apparatus for detecting and limiting forward displacement of the valve pin **200** can be used during injection and pack. For example, the pressure at the injection molding machine nozzle can be measured to monitor the material pressure supplied to the manifold. If the input pressure to the manifold is less than the target pressure, or less than a specific amount above the target pressure, e.g., 500 p.s.i., an error message is generated.

[**0105**] Another means for limiting the forward movement of the pin is a mechanical or proximity switch which can be used to detect and limit the displacement of the valve pin towards the gate instead of the control logic previously described. The mechanical or proximity switch indicates when the pin travels beyond the control range (for example, 4 millimeters). If the switch changes state, the direction of the pin travel is halted or reversed slightly to maintain the pin within the desired range of movement.

[**0106**] Another means for limiting the forward movement of the pin is a position sensor, for example, a linear voltage differential transformer (LVDT) that is mounted onto the pin

shaft to give an output signal proportional to pin distance traveled. When the output signal indicates that the pin travels beyond the control range, the movement is halted or reversed slightly.

[**0107**] Still another means for limiting the forward movement of the pin is an electronic actuator. An electronic actuator is used to move the pin instead of the hydraulic or pneumatic actuator shown in FIGS. **13-15**. An example of a suitable electronic actuator is shown in co-pending U.S. Ser. No. 09/187,974. Using an electronic actuator, the output signal to the servo valve motor can be used to estimate pin position, or an encoder can be added to the motor to give an output signal proportional to pin position. As with previous options, if the pin position travels beyond the control range, then the direction is reversed slightly or the position maintained.

[**0108**] At the end of the pack portion of the injection cycle, the valve pin **200** is moved all the way forward to close off the gate as shown in **FIG. 15**. In the foregoing example, the full stroke of the pin (from the position in **FIG. 13** to the position in **FIG. 15**) is approximately 12 millimeters. Of course, different ranges of movement can be used depending on the application.

[**0109**] The gate remains closed until just prior to the start of the next injection cycle when it is opened and moved to the position shown in **FIG. 13**. While the gate is closed, as shown in **FIG. 15**, the injection molding machine begins plastication for the next injection cycle as the part is cooled and ejected from the mold.

[**0110**] **FIG. 16** shows time versus pressure graphs (**235**, **237**, **239**, **241**) of the pressure detected by four pressure transducers associated with four nozzles mounted in manifold block **231**. The four nozzles are substantially similar to the nozzle shown in FIGS. **13-15**, and include pressure transducers coupled to the controller **210** in the same manner as pressure transducer **217**.

[**0111**] The graphs of FIGS. **16** (*a-d*) are generated on the user interface **214** so that a user can observe the tracking of the actual pressure versus the target pressure during the injection cycle in real time, or after the cycle is complete. The four different graphs of **FIG. 16** show four independent target pressure profiles ("desired") emulated by the four individual nozzles. Different target profiles are desirable to uniformly fill different sized individual cavities associated with each nozzle, or to uniformly fill different sized sections of a single cavity. Graphs such as these can be generated with respect to any of the previous embodiments described herein.

[**0112**] The valve pin associated with graph **235** is opened sequentially at 0.5 seconds after the valves associated with the other three graphs (**237**, **239** and **241**) were opened at 0.00 seconds. Referring back to FIGS. **13-15**, just before opening, the valve pins are in the position shown in **FIG. 13**, while at approximately 6.25 seconds at the end of the injection cycle all four valve pins are in the position shown in **FIG. 15**. During injection (for example, 0.00 to 1.0 seconds in **FIG. 16***b*) and pack (for example, 1.0 to 6.25 seconds in **FIG. 16***b*) portions of the graphs, each valve pin is controlled to a plurality of positions to alter the pressure sensed by the pressure transducer associated therewith to track the target pressure.

[**0113**] Through the user interface **214**, target profiles can be designed, and changes can be made to any of the target profiles using standard windows-based editing techniques. The profiles are then used by controller **210** to control the position of the valve pin. For example, **FIG. 17** shows an example of a profile creation and editing screen icon **300** generated on interface **214**.

[**0114**] Screen icon **300** is generated by a windows-based application performed on interface **214**. Alternatively, this icon could be generated on an interface associated with controller **210**. Screen icon **300** provides a user with the ability to create a new target profile or edit an existing target profile for any given nozzle and cavity associated therewith. Screen icon **300** and the profile creation text techniques described herein are described with reference to FIGS. **13-15**, although they are applicable to all embodiments described herein.

[**0115**] A profile **310** includes (x, y) data pairs, corresponding to time values **320** and pressure values **330** which represent the desired pressure sensed by the pressure transducer for the particular nozzle being profiled. The screen icon shown in **FIG. 17** is shown in a "basic" mode in which a limited group of parameters are entered to generate a profile. For example, in the foregoing embodiment, the "basic" mode permits a user to input start time displayed at **340**, maximum fill pressure displayed at **350** (also known as injection pressure), the start of pack time displayed at **360**, the pack pressure displayed at **370**, and the total cycle time displayed at **380**.

[**0116**] The screen also allows the user to select the particular valve pin they are controlling displayed at **390**, and name the part being molded displayed at **400**. Each of these parameters can be adjusted independently using standard windows-based editing techniques such as using a cursor to actuate up/down arrows **410**, or by simply typing in values on a keyboard. As these parameters are entered and modified, the profile will be displayed on a graph **420** according to the parameters selected at that time.

[**0117**] By clicking on a pull-down menu arrow **391**, the user can select different nozzle valves in order to create, view or edit a profile for the selected nozzle valve and cavity associated therewith. Also, a part name **400** can be entered and displayed for each selected nozzle valve.

[**0118**] The newly edited profile can be saved in computer memory individually, or saved as a group of profiles for a group of nozzles that inject into a particular single or multi-cavity mold. The term "recipe" is used to describe a group of profiles for a particular mold and the name of the particular recipe is displayed at **430** on the screen icon.

[**0119**] To create a new profile or edit an existing profile, first the user selects a particular nozzle valve of the group of valves for the particular recipe group being profiled. The valve selection is displayed at **390**. The user inputs an alpha/numeric name to be associated with the profile being created, for family tool molds this may be called a part name displayed at **400**. The user then inputs a time displayed at **340** to specify when injection starts. A delay can be with particular valve pins to sequence the opening of the valve pins and the injection of melt material into different gates of a mold.

[0120] The user then inputs the fill (injection) pressure displayed at **350**. In the basic mode, the ramp from zero pressure to max fill pressure is a fixed time, for example, 0.3 seconds. The user next inputs the start pack time to indicate when the pack phase of the injection cycle starts. The ramp from the filling phase to the packing phase is also fixed time in the basic mode, for example, 0.3 seconds.

[0121] The final parameter is the cycle time which is displayed at **380** in which the user specifies when the pack phase (and the injection cycle) ends. The ramp from the pack phase to zero pressure will be instantaneous when a valve pin is used to close the gate, as in the embodiment of **FIG. 13**, or slower in a thermal gate (see **FIG. 1**) due to the residual pressure in the cavity which will decay to zero pressure once the part solidifies in the mold cavity.

[0122] User input buttons **415** through **455** are used to save and load target profiles. Button **415** permits the user to close the screen. When this button is clicked, the current group of profiles will take effect for the recipe being profiled. Cancel button **425** is used to ignore current profile changes and revert back to the original profiles and close the screen. Read Trace button **435** is used to load an existing and saved target profile from memory. The profiles can be stored in memory contained in the interface **215** or the controller **210**. Save trace button **440** is used to save the current profile. Read group button **445** is used to load an existing recipe group. Save group button **450** is used to save the current group of target profiles for a group of nozzle valve pins. The process tuning button **455** allows the user to change the PID settings (for example, the gains) for a particular nozzle valve in a control zone. Also displayed is a pressure range **465** for the injection molding application.

[0123] Button **460** permits the user to toggle to an "advanced" mode profile creation and editing screen. The advanced profile creation and editing screen is shown in **FIG. 18**. The advanced mode allows a greater number of profile points to be inserted, edited, or deleted than the basic mode. As in the basic mode, as the profile is changed, the resulting profile is displayed.

[0124] The advanced mode offers greater profitability because the user can select values for individual time and pressure data pairs. As shown in the graph **420**, the profile **470** displayed is not limited to a single pressure for fill and pack, respectively, as in the basic mode. In the advanced mode, individual (x, y) data pairs (time and pressure) can be selected anywhere during the injection cycle.

[0125] To create and edit a profile using advanced mode, the user can select a plurality of times during the injection cycle (for example 16 different times), and select a pressure value for each selected time. Using standard windows-based editing techniques (arrows **475**) the user assigns consecutive points along the profile (displayed at **478**), particular time values displayed at **480** and particular pressure values displayed at **485**.

[0126] The next button **490** is used to select the next point on the profile for editing. Prev button **495** is used to select the previous point on the profile for editing. Delete button **500** is used for deleting the currently selected point. When the delete button is used the two adjacent points will be redrawn showing one straight line segment.

[0127] The add button **510** is used to add a new point after the currently selected point in which time and pressure values are entered for the new point. When the add button is used the two adjacent points will be redrawn showing two segments connecting to the new point.

[0128] FIGS. **19-23** show another alternative embodiment of an injection molding system. The system includes a manifold **515** having a plurality of nozzles **520** coupled thereto for injecting melt material into a plurality of cavities **525**. Alternatively, the nozzles can also inject into a single cavity. In **FIG. 19**, only one nozzle **520** is shown but the following description applies to all nozzles coupled to manifold **515**.

[0129] As in previous embodiments, each nozzle in the system includes a pressure transducer **530** associated therewith for sensing the pressure of the melt material in the manifold which thereby gives an indication of rate of meltflow through nozzle **520** and into cavity **525** with respect to each injection molding nozzle. Mold cavity **525** is formed by mold halves **526** and **527**, which are separated to eject the molded part formed in cavity **525** after the injection cycle. As in previous embodiments, the pressure transducer can also be located in the nozzle, the manifold, or the cavity.

[0130] As in previous embodiments, a controller **535** receives signals from pressure transducers **530** coupled to each nozzle **520** (only one of which is shown). The controller **535** controls solenoid valve **540** which controls the movement of a piston in actuator **545** which is coupled to and acts to reciprocate the valve pin **550** to open and close gate **555** to cavity **525**.

[0131] The controller also sends a signal to servo valve **560A** which controls actuator **560** which in turn controls the movement of a ram **565**, and further controls solenoid valve **570** which is coupled to another actuator **575** which controls a valve **580** which is adapted to open and close a manifold channel **585** which leads to nozzle **520**. Each injection nozzle coupled to manifold **515** (not shown) includes the foregoing actuators **545**, **575** and **560** and ram **565** and solenoid valves **540** and **570** and servo valve **560A** associated therewith for controlling flow from each nozzle.

[0132] The actuators are mounted in a clamp plate **595** which also includes an opening **600** that receives an inlet bushing **610** threadably mounted to the manifold **515**. The inlet bushing **610** receives a nozzle **590** from an injection molding machine. The injection molding machine can be, for example, a reciprocating or non-reciprocating extruder. The injection molding machine nozzle **590** feeds melt material into the central bushing **610** into a central channel **620** which branches off via a plurality of channels **585** and **630** (and others not shown) to a corresponding plurality of injection molding nozzles **520**.

[0133] The foregoing embodiment is similar to previous embodiments in that pressure transducer **530** is used to measure pressure indicative of flow rate of melt material into cavity **525** during the injection cycle. (The actuators described herein are hydraulic actuators, however, pneumatic or electric or other types of actuation can also be used.) Also, as in previous embodiments, a controller **535** compares the pressure sensed by the pressure transducer to target values of a target profile and issues control signals to increase or decrease pressure to track the target profile for each nozzle.

[0134] In previous embodiments the controller controlled the position of a valve pin to regulate flow rate independently at each gate during injection. The foregoing embodiment also enables the flow rate of plastic to be controlled independently through each nozzle **520** and each gate during injection. However, in the embodiment shown in FIGS. **19-23**, a valve pin is not used to control flow rate as in previous embodiments. Rather, valve pin **550** is used only to open and close gate **555**.

[0135] In the foregoing embodiment, ram **565** and well **640** are used to regulate the flow of melt material through nozzle **520** and into cavity **525** in the following manner.

[0136] At the start of the injection cycle, valve gate **555** is closed by valve pin **550** and valve **580** is opened to permit flow through manifold channel **585** (see **FIG. 20**). The injection molding machine nozzle **590** injects melt material through the inlet bushing **610** into the manifold **515**, such that it fills well **640** (see **FIG. 20**). The valve pin **550** is still in the closed position while the well **640** is being filled. Ram **565** is in a predetermined adjustable retracted position to permit a specific volume of melt material to gather in well **640** (see **FIG. 21**). **FIG. 21** shows the system ready to inject melt material into cavity **525**.

[0137] The controller **535** then signals the servo valve **540** to cause actuator **545** to retract valve pin **550** and open gate **555**, while also signaling servo valve **570** to cause actuator **575** to close valve **580** and shut off manifold channel **585**. Closing valve **580** when injecting into the cavity prevents backflow of material through channel **585**. This position is shown in **FIG. 22**.

[0138] The controller then signals actuator **560** to move ram **565** forward to inject material from the well **640** through the nozzle **520** and into the cavity **525**. During this time, the controller controls the velocity at which the ram moves forward, according to the pressure sensed by pressure transducer **530**, in relation to a target pressure profile. Accordingly, if the pressure transducer **530** senses a pressure that is below the target pressure for that particular time during the injection cycle, the controller **535** signals the actuator **560** to increase the velocity of the ram **565**, conversely, if the pressure sensed is greater than the target pressure, the controller will control the actuator to decrease the velocity of the ram forward. When the ram reaches its lowermost position, the cavity **525** is full and the gate is closed (see **FIG. 23**). Alternatively, ram **565** can be velocity controlled by using a linear transducer to monitor ram position. If so, at the end of injection, the ram is not bottomed out, and control can be transferred to the pressure transducer **530** during pack.

[0139] As stated above, a reciprocating or non-reciprocating extruder can be used. If a non-reciprocating extruder is used, plastication into the manifold can be continuous, and the valve **580** is used to shut off the manifold channel **585** during injection so that during this time no plastic can flow through the manifold channel. When well **640** is filled with melt material, plastication in the non-reciprocating extruder can be stopped until the next cycle.

[0140] As in previous embodiments described herein, preferably a PID algorithm is used to control the actuator **560** to track the target profile. The target profile can be created in the same manner as described above with respect to previous embodiments.

[0141] Using the embodiment shown in FIGS. **19-23**, the flow rate of plastic through each gate is controlled independently. Additionally, the use of well **640** enables one to control the specific volume of plastic injected into each cavity **525**, which leads to part-to-part consistency, especially when molding in multi-cavity applications in which each cavity **525** is an identical part. By altering the position of ram **565** when injecting melt material into well **640**, the volume of material in well **640** can be controlled, thereby controlling the volume of material into cavity **525**.

[0142] FIGS. **24-28** show an alternative embodiment in which a load cell **140** is used to sense the melt pressure acting on the face **142** of valve pin **41**. Where possible, reference characters are used that refer to elements common to **FIG. 1**. As in previous embodiments, an actuator **49** is used to translate the valve pin **41** toward and away from the gate. The actuator **49** includes a housing **144** and a piston **146** slidably mounted within the housing. The actuator is fed by pneumatic or hydraulic lines **148** and **150**. Other actuators, for example, electrical actuators may also be used.

[0143] The valve pin **41** is mounted to the piston **146** so that valve pin translates through the injection nozzle **23** with movement of the piston. The valve pin is mounted to the piston via a pin **152**. The pin **152** is slotted so that a clearance **154** exists in which the valve pin can translate with respect to the pin **152** and piston **146**. The valve pin bears against a button **156** on the load cell **140**. The load cell **140** is mounted via screws **158** to the piston. Thus, as shown in **FIG. 26, a** force F2 acting on the valve pin will cause the load button **156** to depress. Excitation voltages or other types of signals which indicate the proportionate force on the load button **156** are carried through cable **160** and fed to a controller **151**.

[0144] In operation, as seen in **FIG. 24**, the melt material is injected from an injection molding machine nozzle **11** into an extended inlet **13** mounted to a manifold **15** through respective injection molding nozzles **21** and **23** and into mold cavities **162** and **164**. In the embodiment shown, a multi-cavity mold is shown in which nozzles **21** and **23** inject melt material to form different size molded parts in cavities **162** and **164**, respectively. As stated above with respect to the embodiment shown in **FIG. 1, a** mold cavity with multiple gates can be used, or multiple mold cavities with cavities having the same size can be used.

[0145] When the valve pin **41** is retracted to permit melt material to be injected into the cavity **162**, the melt pressure will act on the face of the valve pin **142** with the resulting force being transmitted through the shaft of the valve pin to the load sensor **140** (see FIGS. **26-27**). Thus, the load (F2) sensed by load cell **140** is directly related to the melt flow rate into the melt cavity.

[0146] Sheer stresses caused by the melt streaming downward over the valve pin will tend to reduce the pressure sensed by the load cell but such stresses are typically less than the nominal load due to the melt pressure. Thus, the resultant force F2 will tend to compress the valve pin toward the load cell, with the possible exception of the initial opening of the valve, and the load cell provides an accurate indicator of the melt pressure at the gate. If the application results in sheer stresses exceeding F2, the load cell can be pre-loaded to compensate for such stresses.

[0147] Similar to previous embodiments described above, the signal transmitted through cable **160** is compared by controller **151** with a target value of a target profile and the controller adjusts the position of the valve pin accordingly to increase or decrease flow rate. In this embodiment, the target profile is also a time versus pressure profile, but the pressure is the a result of the force of the pin on the load cell, as opposed to previous embodiments in which a pressure transducer directly senses the force of the flow of the melt material. The profile is created in similar fashion to the embodiments described above: running the process and adjusting the profile until acceptable parts are produced.

[0148] The valve pin controls the flow rate through the gate using a tapered edge **155** to form a control gap **153** close to the gate. It should be noted, however, that any of the other valve pin designs described herein can be used with the load cell **140**. Accordingly, when the pressure sensed by the load cell is less than the target pressure on the target profile, the controller **151** signals the actuator to retract the valve pin to increase the size of the control gap **153** and, consequently, the flow rate. If the pressure sensed by the load cell **140** is greater than the target pressure, the controller **151** signals the actuator to displace the valve pin toward the gate to decrease the size of the control gap **153** and consequently, the flow rate.

[0149] The use of the load cell has an additional application shown in **FIG. 27A**. In a single cavity multiple gate system it is often desirable to open gates in a cascading fashion as soon as the flow front of the melt material reaches the gate. When melt material **166** has flowed into the gate area of the valve pin, a force F3 from the melt in the cavity is exerted on the face **142** of the valve pin.

[0150] In this way, gates can be sequentially opened in cascading fashion by sensing the force of the melt pressure on the face of the valve pin when the valve pin is closed. Given typical gate diameters of 0.2 inches and melt pressures of 10,000 psi, the resulting force of 300 pounds is readily measured by available load sensors, since the force of the cell equals the area of the gate times the pressure at the gate. Thus, this melt detection can then be used to signal the opening of the gate as in the sequential valve gate. This assures that the gate does not open prematurely.

[0151] **FIGS. 28A and 28B** show an alternative embodiment in which the sheer stress on the valve pin is reduced. The nozzle **21** is designed to include a channel for melt flow **168** and a bore **170** through which the valve pin reciprocates. As such, the flow does not cause any axial sheer stress on the valve pin and thus reduces errors in pressure sensing. An indent **172** is provided in the nozzle **21** so that side load on the valve pin is reduced, i.e., to equalize pressure on both sides of the valve pin. An additional benefit to the configuration shown in **FIGS. 28A and 28B** is that since the flow of material is away from the valve pin, the valve pin does not "split" the flow of material, which can tend to cause part lines or a flow streak on the molded part.

[0152] **FIG. 29** shows another alternative embodiment of the present invention similar to **FIG. 19**. As in **FIG. 19, a** ram **565** is used to force material from well **640** into cavity **525** at a controlled rate. The rate is controlled by signals sent from controller **535** to servo valve **560**A, which in turn controls the velocity at which actuator **560** moves ram **565** forward.

[0153] In **FIG. 29**, actuator **560** is shown in more detail including piston **564**, actuator chamber **566**, and hydraulic lines **561** and **562** controlled by servo valve **560**A. Energizing hydraulic line **561** and filling chamber **566** causes piston **564** and ram **565** to move forward and displace material from well **640** through channel **585** and nozzle **520**, and into cavity **525**.

[0154] In the embodiment of **FIG. 19**, the controller controls the rate at which the ram injects material according to signals received by pressure transducer **530**, compared to a target profile. In the embodiment of **FIG. 29**, pressure transducer **530** has been removed in favor of pressure transducer **563** mounted along hydraulic line **561** which leads to chamber **566**. The pressure transducer **560** senses the hydraulic fluid pressure in line **561** and sends a proportional signal to the controller **535**. Since the pressure of the hydraulic fluid entering chamber **566** is directly related to the rate at which the ram **565** moves forward, and the rate at which the ram moves forward is directly related to the rate of material flow into the cavity **525**, the pressure sensed by pressure transducer **560** is directly related to the rate of material flow into the cavity **525**, and can be used to control the material flow rate.

[0155] Accordingly, as in previous embodiments, a target profile is created that has been demonstrated to generate acceptable molded parts. In the embodiment of **FIG. 29**, however, the target profile represents target values of the hydraulic pressure sensed by pressure transducer **563**, as opposed to directly sensing the material pressure. In operation, the controller compares the pressure signal sensed from pressure transducer **563** to the target pressure profile for gate **555**. If the pressure sensed is too low, the controller will increase the hydraulic pressure in line **561** (which increases the velocity of the ram which increases flow rate of the material), if the pressure is too high the controller will decrease the hydraulic pressure (which decreases the velocity of the ram which decreases the rate of material flow).

[0156] The target pressure profile of the hydraulic fluid will appear similar to a conventional material profile, since the pressure of the hydraulic fluid will rise rapidly during the injection portion of the cycle, level off during the pack portion of the cycle, and go to zero pressure as cycle ends the valve pin **550** closes.

[0157] Although only one injection nozzle **520** and cavity **525** is shown, there is a like arrangement associated with each injection nozzle of actuators **575**, **565**, **545**, as well as solenoid valves **540** and **570** and servo valve **560**, to independently control the melt flowing from each gate, according to the target profile created for that gate. Also, although a single cavity **525** is shown, each nozzle may inject to multiple cavities or a single cavity mold. Only a single controller **535**, however, is needed to control all the nozzles associated with manifold **515**.

[0158] Using the foregoing arrangement of **FIG. 29**, as in previous embodiments, the material flow from each nozzle of the manifold can be controlled independently.

[0159] **FIG. 30** shows another alternative embodiment of the present invention. The embodiment of **FIG. 30** is substantially the same as the embodiment shown in **FIG. 13** with the exception that pressure transducer **217** has been moved from manifold **231** to inside the mold half **650** which,

together with mold half **660**, forms mold cavity **670** in which the molded part is formed. Accordingly, in this embodiment, the target profile represents target values of the pressure sensed by pressure transducer **217** inside the cavity opposite the gate **211**.

[**0160**] The operation of the embodiment of **FIG. 30** is the same as that described in the embodiment shown in **FIG. 13** in terms of target profile creation and use of valve pin **200** to control the material flow (interface **214** is not shown **FIG. 30** but can be used). However, placing the pressure transducer in the cavity offers several advantages, for example, in the cavity the pressure transducer **217** is not exposed to the high temperatures generated by the manifold, as in **FIG. 13**. Also, the presence of the pressure transducer in the manifold may slightly disrupt material flow in the manifold. Another consideration in choosing whether to mount the transducer in the mold or in the manifold is whether the mold geometry permits the transducer to be mounted in the mold.

[**0161**] **FIG. 31** is another alternative embodiment of the present invention that is similar to **FIG. 13** (like reference characters are used wherever possible). Target profile creation as well as the flow control operation by valve pin **200** is substantially the same as described above. **FIG. 31**, however, does not include a pressure transducer **217** as shown in **FIG. 13** to directly sense the flow of melt material into the cavity. Rather, similar to the embodiment shown in **FIG. 24**, the arrangement shown in **FIG. 31** performs flow control by sensing the material pressure F2 exerted by the melt material on the valve pin.

[**0162**] In **FIG. 24** measuring the load on the valve pin was performed using a load cell **140**, however, in **FIG. 31**, it is performed by pressure transducers **700** and **710** mounted along hydraulic lines **720** and **730** which lead to actuator chambers **740** and **750**, respectively. Energizing lines **720** and **730** and filling actuator chambers **740** and **750**, enables axial movement of piston **223**, thereby moving valve pin **200** and affecting the flow rate of the material into the cavity **760** as described above.

[**0163**] Pressure transducers **700** and **710** sense a differential pressure which is directly related to the force exerted on valve pin **200**, which is directly related to the flow rate of the material. For example, when the material flow causes a force F2 to act on valve pin **200**, the force relates up the valve pin to the piston, which in turn tends to increase the pressure in chamber **740** and line **720** and decrease the pressure in chamber **750** and line **730**, directly causing a change in the difference in the pressures sensed by the transducers **700** and **710**. Accordingly, the differential pressure is directly related to the flow rate of the material into the cavity.

[**0164**] Once an acceptable target profile of differential pressure is developed using techniques described above, the controller will cause the servo valve **212** to track this target profile by altering the position of the valve pin to change the flow rate of the material and track the differential pressure target profile. For example, if the differential pressure is too high (e.g., the pressure sensed by transducer **700** is higher than the pressure sensed by transducer **710** by an amount greater than the target differential pressure) the controller will cause servo valve to retract the valve pin to reduce the flow rate, thereby reducing the force F2 on the valve pin, thereby decreasing the pressure in chamber **740** and line **720**, thereby decreasing the pressure sensed by transducer **700**, thereby decreasing the difference in pressure sensed by transducers **700** and **710**. Note, in certain applications the differential pressure may be negative due to the sheer force of the material on the valve pin, this however will not affect the controller's ability to track the target profile.

[**0165**] As in the embodiment shown in **FIG. 24**, the embodiment shown in **FIG. 31** offers the advantage that it is not necessary to mount a pressure transducer in the mold or the manifold. As in all previous embodiments, the embodiment shown in **FIG. 31** enables the material flow from each nozzle attached to the manifold to be independently profileable.

[**0166**] Having thus described certain embodiments of the present invention, various alterations, modifications, and improvements will readily occur to those skilled in the art. Such alterations, modifications, and improvements are intended to be within the spirit and scope of the invention. Accordingly, the foregoing description is by way of example only, and not intended to be limiting. The invention is limited only as defined in the following claims and the equivalents thereof.

What is claimed is:

1. An injection molding apparatus comprising:

a manifold;

at least one injection nozzle coupled to the manifold;

an actuator; and

a valve pin adapted to reciprocate through the manifold and the injection nozzle, the valve pin having a first end coupled to the actuator, a second end that closes the gate in a forward position, and a control surface intermediate said first and second ends for adjusting the rate of material flow during an injection cycle, wherein retracting the valve pin tends to decrease the rate of material flow during the injection cycle and displacing the valve pin toward the gate tends to increase the rate of material flow during the injection cycle.

2. The injection molding apparatus of claim 1, wherein the control surface forms a gap with a surface of the manifold so that the size of the gap is decreased when the valve pin is retracted away from the gate and the size of the gap is increased when the valve pin is displaced toward the gate.

3. The injection molding apparatus of claim 1, further comprising a controller coupled to the actuator to adjust the valve pin to a plurality of positions during the injection cycle to alter the rate of material flow during the injection cycle.

4. The injection molding apparatus of claim 3, wherein the controller compares a sensed condition related to material flow rate to a target condition and adjusts the valve pin to track the target condition.

5. The injection molding apparatus of claim 4, wherein the sensed condition is pressure, and the apparatus further comprises a pressure transducer for sensing the material pressure downstream the control surface of the valve pin.

6. The injection molding apparatus of claim 5, wherein the pressure transducer is coupled to one of the manifold, the injection nozzle and the mold cavity.

7. The injection molding apparatus of claim 1, further comprising means for limiting the forward movement of the valve pin during the injection cycle.

8. In an injection molding system having a manifold for injecting material into first and second mold cavities, respectively, and a controller for controlling the flow rate of material injected into the first and second mold cavities during an injection cycle according to first and second target profiles, respectively, wherein the first and second target profiles represent a desired value of first and second sensed conditions related to the flow rate of material injected into the first and second cavities during an injection cycle, respectively, a method for creating at least the first target profile for the first mold cavity, the method comprising the steps of:

(A) shutting off a flow of material into the second cavity; and

(B) injecting material into the first cavity to determine what values of the first sensed condition produce an acceptable molded part in the first cavity, the values of the first sensed condition that produce an acceptable molded part constituting the first target profile.

9. The method of claim 8, further comprising creating the second target profile for the second mold cavity by shutting off a flow of material into the first cavity, and injecting material into the second cavity to determine what values of the second sensed condition produces an acceptable molded part in the second cavity.

10. The method of claim 8, wherein the first cavity and the second cavity have a different size and shape from one another.

11. The method of claim 8, wherein the first cavity and the second cavity have a same size and shape.

12. The method of claim 8, wherein the first sensed condition is pressure exerted by the material during an injection cycle.

13. The method of claim 12, wherein the pressure is measured by a pressure transducer in one of a manifold channel that leads to the first cavity, an injection nozzle through which material is injected into the first cavity, and inside the first cavity.

14. The method of claim 8, wherein step (A) includes closing a gate to the second cavity with a valve pin.

15. The method of claim 14, wherein step (A) includes moving the pin away from the gate to shut off the flow of material.

16. The method of claim 8, further comprising storing the first target profile for use by the controller to control the flow rate of material into the first cavity.

17. The method of claim 16, wherein the first sensed condition is pressure exerted by the material during an injection cycle.

18. The method of claim 17, wherein the pressure is measured by a pressure transducer in one of a manifold channel that leads to the first cavity, an injection nozzle through which material is injected into the first cavity, and inside the first cavity.

19. The method of claim 16, further comprising creating the second target profile for the second mold cavity by shutting off a flow of material into the first cavity, and injecting material into the second cavity to determine what values of the second sensed condition produces an acceptable molded part in the second cavity.

20. The method of claim 19, further comprising storing the second target profile for use by the controller to control the flow rate of material into the second cavity.

21. The method of claim 20, wherein the first and second sensed conditions are pressure exerted by the material during an injection cycle.

22. The method of claim 21, wherein the pressure for the first target profile is measured by a pressure transducer in one of a manifold channel that leads to the first cavity, an injection nozzle through which material is injected into the first cavity, and inside the first cavity, and the pressure for the second target profile is measured by a pressure transducer in one of a manifold channel that leads to the second cavity, an injection nozzle through which material is injected into the second cavity, and inside the second cavity.

23. The method of claim 8, wherein step (B) includes running at least one injection cycle.

24. The method of claim 23, wherein step (B) includes repeatedly running injection cycles at varying first sensed conditions until acceptable molded parts are produced.

25. The method of claim 8, wherein step (B) includes running an injection cycle according to a test first target profile executed by the controller.

26. The method of claim 25, wherein step (B) includes repeatedly running injection cycles according to varying test first target profiles executed by the controller until acceptable molded parts are produced.

27. In an injection molding system having a manifold for injecting material into first and second mold cavities, respectively, and a controller for controlling the flow rate of material injected into the first and second mold cavities according to first and second target profiles, respectively, wherein each target profile represents a desired value of first and second sensed conditions related to the flow rate of material injected into the first and second cavities during an injection cycle, respectively, a method for creating the first and second target profiles, the method comprising the step of:

(A) simultaneously injecting material into the first and second cavities; and

(B) based on the simultaneous injection of material in step (A), determining what values of the first sensed condition produce an acceptable molded part in the first mold cavity, the values of the first sensed condition that produce an acceptable molded part constituting the first target profile, and determining what values of the second sensed condition produce an acceptable molded part in the second mold cavity, the values of the second sensed condition that produce an acceptable molded part in the second mold cavity constituting the second target profile.

28. The method of claim 27, wherein the first and second sensed conditions are pressure.

29. The method of claim 28, wherein the first sensed condition for the first target profile is measured by a pressure transducer in one of a manifold channel that leads to the first cavity, an injection nozzle through which material is injected into the first cavity, and inside the first cavity, and the second sensed condition for the second target profile is measured by a pressure transducer in one of a manifold channel that leads to the second cavity, an injection nozzle through which material is injected into the second cavity, and inside the second cavity.

30. The method of claim 27, wherein the first and second mold cavities are a same size and shape.

31. In an injection molding system having a manifold for injecting material through first and second gates into one or more mold cavities, and a controller for controlling the flow rate of material injected through the first and second gates during an injection cycle according to first and second target profiles, respectively, wherein the first and second target profiles represent a desired value of first and second sensed conditions related to the flow rate of material injected through the first and second gates during an injection cycle, respectively, a method for creating at least the first target profile, the method comprising the steps of:

(A) selecting a test first target profile to be executed by the controller;

(B) injecting material through the first gate into a cavity according to the test first target profile executed by the controller; and

(C) determining whether the material injected in step (B) produces an acceptable molded part in the cavity.

32. The method of claim 31, wherein when the test first target profile does not produce acceptable molded parts in the cavity, the method further comprises altering the test first target profile and repeating steps (B) and (C) according to the altered test first target profile.

33. The method of claim 32, wherein the first sensed condition is pressure, and the first target profile is a profile of target pressure values throughout an injection cycle.

34. The method of claim 33, wherein the pressure for the first target profile is measured by a pressure transducer in one of a manifold channel that leads to the cavity, an injection nozzle through which material is injected into the cavity, and the cavity.

35. The method of claim 31, wherein the first and second gates lead into the cavity, step (A) further includes selecting a test second target profile to be executed by the controller, step (B) further includes injecting material through the second gate into the cavity according to the test second target profile executed by the controller, and step (C) further includes determining whether in step (B) the test first target profile and the test second target profile produced an acceptable molded part in the cavity.

36. The method of claim 31, wherein the first and second gates lead into first and second mold cavities, respectively, step (A) further includes selecting a test second target profile to be executed by the controller, step (B) further includes injecting material through the second gate into the second cavity according to the test second target profile executed by the controller; and step (C) further includes determining whether in step (B) the test second target profile produced an acceptable molded part in the second cavity.

37. In an injection molding system having a manifold for injecting material through a first gate into a first mold cavity, and a controller for controlling the flow rate of material injected through the first gate during an injection cycle according to a first target pressure profile by comparing a target pressure to an actual pressure during the injection cycle, wherein the first target pressure profile represents a target value of the pressure exerted by the material injected through the first gate during the injection cycle, a method for creating the first target pressure profile comprising the steps of:

(A) selecting a value of a variable corresponding to target injection pressure of the injected material;

(B) selecting a value of a variable corresponding to target pack pressure of the injected material; and

(C) selecting a value of a variable corresponding to a duration of the injection cycle.

38. The method of claim 37, wherein the actual pressure is measured in one of a manifold channel that leads to the first cavity, an injection nozzle through which material is injected into the first cavity, and the first cavity.

39. The method of claim 37, wherein the injection pressure is measured by a load cell located behind a valve pin associated with the first gate.

40. The method of claim 37, further comprising (D) inputting the values selected in steps (A) through (C) via a graphical user interface coupled to the controller.

41. The method of claim 40, further comprising (E) forming the first target pressure profile according to the characteristics set forth in steps (A) through (C), and (F) graphically displaying the first target pressure profile on the graphical user interface as a pressure curve.

42. The method of claim 41, wherein a computer coupled to the graphical user interface and the controller performs step (E).

43. The method of claim 37, further comprising the step of selecting a value of a variable corresponding to one of the duration of the target injection pressure and the duration of the target pack pressure.

44. The method of claim 37, wherein the manifold also injects material through a second gate, and the controller controls the flow rate of material injected through the second gate independent of the first gate during an injection cycle according to a second target pressure profile by comparing a second target pressure to a second actual pressure during the injection cycle, and the method further includes:

(D) selecting a value of a variable corresponding to target injection pressure of the material injected through the second gate;

(E) selecting a value of a variable corresponding to target pack pressure of the material injected through the second gate; and

(F) selecting a value of a variable corresponding to a duration of the injection cycle for the second gate.

45. In an injection molding system having a manifold for injecting material through a first gate into a first mold cavity, and a controller for controlling the flow rate of material injected through the first gate during an injection cycle according to a first target pressure profile by comparing a target pressure to an actual pressure exerted by the material, a method for creating the first target pressure profile comprising the steps of:

(A) selecting pressure values for a plurality of variables corresponding to target pressures at a corresponding plurality of times during the injection cycle; and

(B) forming the first target pressure profile according to the pressure values selected in step (A).

46. The method of claim 45, wherein step (A) is performed by inputting the pressure values via a graphical user interface coupled to the controller.

47. The method of claim 46, wherein step (B) is performed by a computer coupled to the graphical user interface and the controller.

48. The method of claim 45, further comprising graphically displaying the first target pressure profile on a graphical user interface as a pressure curve.

49. The method of claim 45, further comprising storing the first target pressure profile in a computer readable medium.

50. The method of claim 45, further comprising selecting time values for a plurality of variables corresponding to times during the injection cycle, each time value being paired with one of said target pressure values selected in step (A).

51. The method of claim 50, wherein up to sixteen pairs of pressures and times can be selected.

52. The method of claim 50, further comprising graphically displaying the first target pressure profile on a graphical user interface as a pressure curve.

53. The method of claim 52, further comprising editing the target pressure profile on the graphical user interface and displaying a pressure curve corresponding to the edited target pressure profile.

54. The method of claim 45, wherein the manifold also injects material through a second gate during the injection cycle, and the controller controls the flow rate of material injected through the second gate independent of the first gate according to a second target pressure profile by comparing a second target pressure to a second actual pressure of the material injected through the second gate, and the method further includes:

(C) selecting pressure values for a second plurality of variables corresponding to target pressures for material injected through the second gate at a corresponding plurality of times during the injection cycle; and

(D) forming the second target pressure profile according to the pressure values selected in step (C).

55. An injection molding apparatus comprising:

a manifold for directing material through first and second gates into one or more mold cavities;

a controller to independently control a flow rate of material injected into through the first and second gates during an injection cycle according to a first target profile associated with the material injected through the first gate and a second target profile associated with material injected through the second gate, wherein the first target profile represents target values of a first sensed condition related to the flow rate of material injected through the first gate during the injection cycle and the second target profile represents target values of a second sensed condition related to the flow rate of material injected through the second gate during the injection cycle; and

a graphical user interface for displaying at least the first target profile.

56. The injection molding apparatus of claim 55, wherein the graphical user interface includes a screen icon to display the first target profile as a curve indicating the target value of the first sensed condition throughout the injection cycle.

57. The injection molding apparatus of claim 56, wherein the graphical user interface can be used to edit the first target profile.

58. The injection molding apparatus of claim 57, wherein the graphical user interface instantaneously displays the edited first target profile.

59. The injection molding apparatus of claim 55, wherein during an injection cycle the first target profile is displayed along with a profile of the first sensed condition.

60. The injection molding apparatus of claim 55, wherein the graphical user interface is used to create the first and second target profiles.

61. The injection molding apparatus of claim 60, wherein the graphical user interface is used to edit the first and second target profiles.

62. The injection molding apparatus of claim 60, wherein the graphical user interface simultaneously displays the first and second target profiles during the injection cycle.

63. The injection molding apparatus of claim 55, wherein the first and second sensed conditions are pressure exerted by the material during the injection cycle.

64. The injection molding apparatus of claim 63, wherein the first sensed condition is measured in one of: a manifold channel that leads to the first gate, an injection nozzle coupled to the manifold that leads to the first gate, and the one or more mold cavities.

65. The injection molding apparatus of claim 60, wherein the first and second sensed conditions are pressures exerted by the material in first and second locations during the injection cycle, and to create the first and second target profiles first and second target pressure values are input via the graphical user interface, respectively.

66. An injection molding apparatus comprising:

a manifold to direct material to first and second gates into one or more mold cavities, the manifold including first and second wells associated with each gate;

a first ram to force material from the first well through the first gate;

a second ram to force material from the second well through the second gate; and

a controller to independently control first and second rates at which the first and second rams force material through the first and second gates and into the one or more mold cavities during an injection cycle.

67. The injection molding apparatus of claim 66, wherein the controller controls the first rate based on a first sensed condition related to the flow rate of material injected through the first gate during the injection cycle, and the controller controls the second rate based on a second sensed condition related to the flow rate of material injected through the second gate during the injection cycle.

68. The injection molding apparatus of claim 67, wherein the controller controls the first and second rates according to first and second target profiles, respectively, wherein the first target profile represents target values of the first sensed condition, and the second target profile represents target values of the second sensed condition.

69. The injection molding apparatus of claim 66, wherein the manifold includes first and second channels that lead to the first and second wells, respectively, from an inlet to receive an injection molding machine nozzle, and first and second valves to prevent the flow of material through the first and second channels, respectively.

70. The injection molding apparatus of claim 67, wherein the first sensed condition is pressure exerted by the material in a first location during the injection cycle.

71. The injection molding apparatus of claim 70, further comprising a first pressure transducer mounted to the manifold at the first location, wherein the controller receives pressure signals from the first pressure transducer during the injection cycle, compares the signals to the first target profile and adjusts the velocity of the first ram so that the pressure sensed by the first pressure transducer tracks the target pressure indicated by the first target profile.

72. The injection molding apparatus of claim 69, wherein the first and second valves are closed when the first and second rams force material through the first and second gates during an injection cycle.

73. The injection molding apparatus of claim 68, wherein the controller independently controls the velocity of the first and second rams during the injection cycle according to a comparison of the first and second sensed conditions to the first and second target profiles, respectively.

74. The injection molding apparatus of claim 71, further comprising a second pressure transducer mounted to the manifold at the second location, wherein the controller receives pressure signals from the second pressure transducer during the injection cycle, compares the signals to the second target profile and adjusts the velocity of the second ram so that the pressure sensed by the second pressure transducer tracks the target pressure indicated by the second target profile.

75. The injection molding apparatus of claim 74, wherein the first pressure transducer is mounted intermediate the first well and the first gate, and the second pressure transducer is mounted intermediate the second well and the second gate.

76. The injection molding apparatus of claim 69, further comprising first and second valve pins for opening and closing the first and second gates, respectively.

77. The injection molding apparatus of claim 76, wherein the controller controls the first and second valves and the first and second valve pins.

78. An injection molding apparatus comprising:

a manifold to direct material into a mold cavity;

a valve pin adapted to reciprocate through the manifold toward and away from the mold cavity, wherein valve pin contacts material injected into the mold cavity; and

a controller to control a flow rate of material injected into the first cavity during an injection cycle based on a force exerted on the valve pin by the material.

79. The injection molding apparatus of claim 78, wherein adjusting a position of the valve pin changes the flow rate, and the controller adjusts the position of the valve pin to control the flow rate.

80. The injection molding apparatus of claim 79, wherein the controller adjusts the position of the valve pin according to a target profile, wherein the target profile represents target values of the force of the material exerted on the valve pin.

81. The injection molding apparatus of claim 78, further comprising a load cell mounted to a rearward end of the valve pin to sense the force exerted on the valve pin by the material.

82. The injection molding apparatus of claim 78, further comprising an actuator to which the valve pin is coupled, the actuator including first and second chambers, and first and second pressure transducers coupled to the first and second chambers, respectively, the first and second pressure transducers to sense the force exerted on the valve pin by the material.

83. The injection molding apparatus of claim 82, wherein adjusting a position of the valve pin changes the flow rate, and the controller adjusts the position of the valve pin to control the flow rate according to a differential pressure sensed by the first and second pressure transducers.

84. The injection molding apparatus of claim 83, wherein the controller adjusts the position of the valve pin according to a target profile, wherein the target profile represents target values of the differential pressure.

85. The injection molding apparatus of claim 78, wherein the valve pin closes the gate.

86. The injection molding apparatus of claim 78, wherein the manifold injects material through a plurality of gates, each gate having a valve pin associated therewith to independently control a rate at which material flows through each gate during an injection cycle, wherein adjusting a position of each valve pin changes the rate for each gate, the controller controlling the position of each valve pin during an injection cycle according to individualized target profiles associated with each gate, wherein each target profile represents target values of a sensed condition for each gate related to the flow rate of material injected through each gate during the injection cycle, the sensed condition for each gate being force exerted on the valve pin for that gate by the material.

87. In an injection molding system apparatus having a manifold, at least one injection nozzle coupled to the manifold, an actuator, and a valve pin adapted to reciprocate through the manifold and the injection nozzle, the valve pin having a first end coupled to the actuator, and a second end that closes the gate, a method having the steps of:

(A) prior to the beginning of an injection cycle, placing the valve pin in a rearward position;

(B) moving the valve pin forward from the rearward position at the beginning of the injection cycle toward the gate to an intermediate position in which material flow is permitted; and

(C) moving the valve pin further toward the gate from the intermediate position to close the gate at the end of the injection cycle.

88. The method of claim 87, where step (B) includes moving the valve pin to a plurality of intermediate positions during the injection cycle to controllably alter the flow rate of the material through the gate.

89. In an injection molding system having a manifold to direct material to first and second gates, the manifold including first and second wells associated with each gate, the method comprising the steps of:

(A) injecting material into each of the first and second wells;

(B) after step (A), injecting material from the each of the first and second wells through each of the first and second gates;

(C) independently controlling the rates at which the material is injected from the first and second wells in step (B).

90. In an injection molding system having a manifold to direct material to first and second gates which lead to one or more mold cavities, the first and second gates having first and second valve pins associated therewith, the method comprising the steps of:

(A) injecting material into the manifold;

(B) determining a first force exerted by the material on the first valve pin, and a second force exerted by the material on the second valve pin, respectively; and

(C) independently controlling the rate at which the material is injected through each of the first and second gates into the one or more mold cavities based on the first and second forces, respectively.

91. In an injection molding system having a manifold to direct material to first and second gates which lead to one or more mold cavities, the method comprising the steps of:

(A) injecting material into the manifold;

(B) controlling in the manifold a first rate at which material is injected through the first gate into the one or more mold cavities based on a first pressure sensed in the one or more cavities; and

(C) controlling in the manifold a second rate at which material is injected through the second gate into the one or more mold cavities based on a second pressure sensed in the one or more cavities.

* * * * *