Aug. 11, 1959 H. S. McKANN 2,898,839

SHEET METAL CHIMNEYS

Filed Feb. 24, 1956 3 Sheets-Sheet 1

Fig. 1.

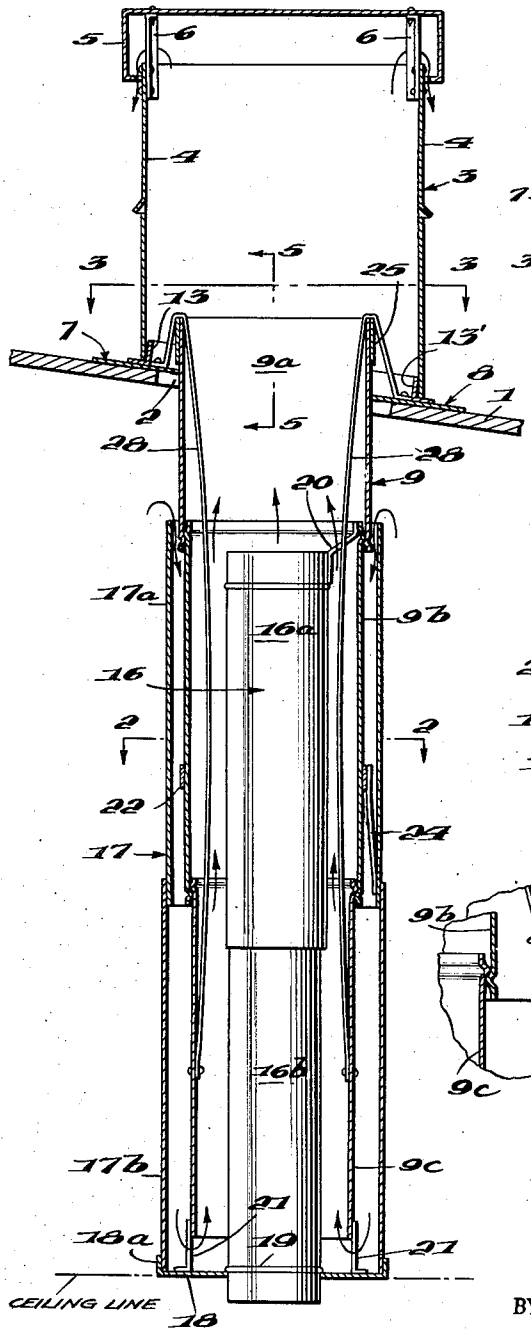

Fig. 3.

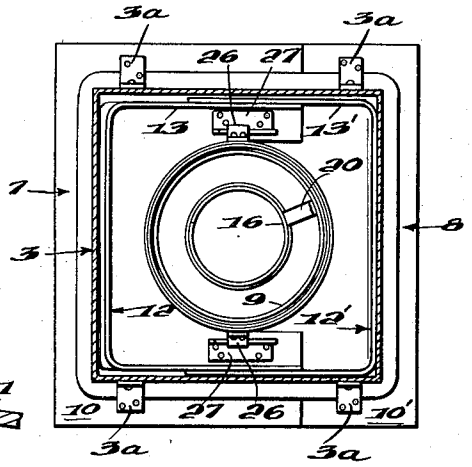

Fig. 2.

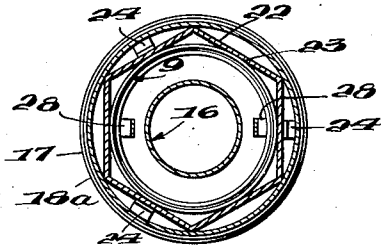

Fig. 1a.

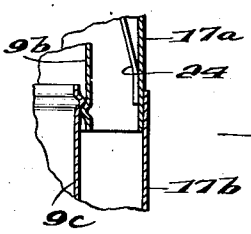

INVENTOR
HENRY S. McKANN,

BY Stone, Boyden & Mack

ATTORNEYS

Aug. 11, 1959 H. S. McKANN 2,898,839

SHEET METAL CHIMNEYS

Filed Feb. 24, 1956 3 Sheets-Sheet 2

Fig. 4.

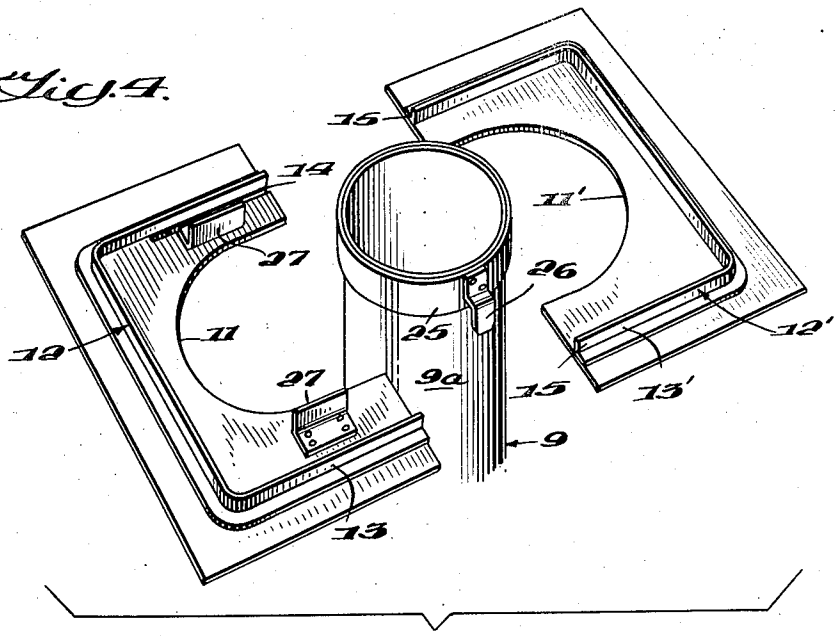

Fig. 5.

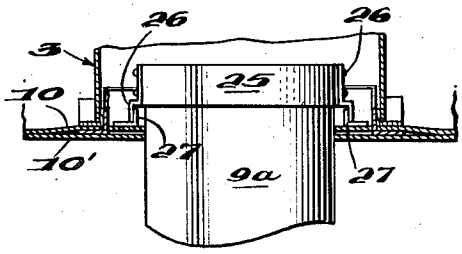

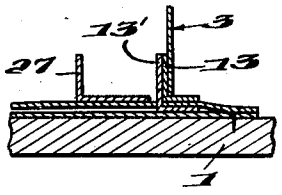

Fig. 5a.

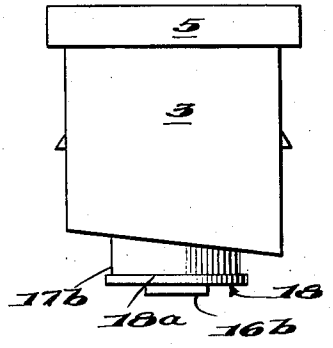

Fig. 6.

INVENTOR
HENRY S. McKANN,

BY Stone, Boyden & Mack

ATTORNEYS

Aug. 11, 1959 H. S. McKANN 2,898,839

SHEET METAL CHIMNEYS

Filed Feb. 24, 1956 3 Sheets-Sheet 3

Fig. 7.

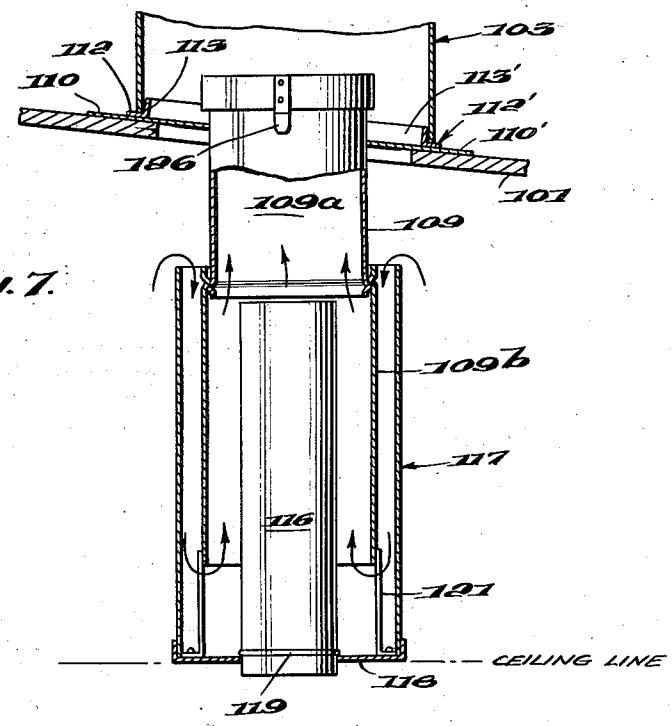

Fig. 8.

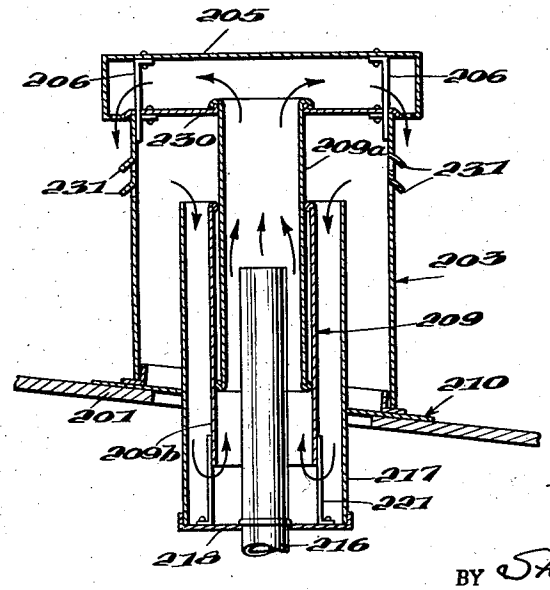

INVENTOR
HENRY S. McKANN,

BY Stone, Boyden & Mack

ATTORNEYS

United States Patent Office 2,898,839 Patented Aug. 11, 1959

2,898,839

SHEET METAL CHIMNEYS

Henry S. McKann, Fredericksburg, Va.

Application February 24, 1956, Serial No. 567,585

10 Claims. (Cl. 98—48)

This invention relates to sheet metal chimneys and building constructions employing the same, and particularly to prefabricated or "package" chimneys.

In its preferred embodiments, the invention pertains to prefabricated chimneys of the type in which the flue or smoke pipe is air cooled. One chimney construction of this general type is disclosed in my Patent 2,713,301, issued July 19, 1955.

In the construction of modern housing facilities, and particularly in houses of the moderate or intermediate price range, there is a growing tendency to employ prefabricated sheet metal chimneys rather than chimneys of brick construction. Such chimneys are at least partially assembled by the manufacturer and then shipped to the point of use, one great advantage being that installation by the builder requires relatively little labor. As pointed out in detail in Patent 2,713,301, it is now the practice to so construct such chimneys that cool air is inducted into the chimney structure and caused to pass upwardly about the flue or smoke pipe, so reducing the heat transfer from the flue or smoke pipe to the adjacent building structure. Advantageously, such chimneys may also use the flow of the cooling air to increase the draft of the chimney in accordance with the air-jet principle disclosed in Patent 2,713,301.

While the prefabricated metal chimneys now in use have achieved considerable success, they have also presented disadvantages which are eliminated by the present invention. One disadvantage has been the fact that prior-art sheet metal chimney constructions have not been well suited for buildings employing a so-called "cathedral roof." Another drawback has been the relative bulkiness of the assembly in the form shipped by the manufacturer, and the resulting high freight rate. In fact, the size of the chimney "pakage" as shipped by the manufacturer has been entirely out of proportion with the weight of the chimney, so that the actual cost of the product to the purchaser was frequently substantially increased, in proportion to the distance between the manufacturer and the point of installation. Finally, while the installation of such prefabricated chimneys is very simple and inexpensive in comparison with brick chimneys, the installation still required a material amount of labor and expense which can desirably be reduced.

In general, the present invention is directed toward eliminating or minimizing such disadvantages.

A particular object of the invention is to provide a simplified, economical chimney structure of the type referred to which is particularly useful in building structures having a "cathedral roof" or a roof of relatively low pitch.

Another object is to provide a chimney structure which may be assembled by the manufacturer and shipped in a single, relatively small package at a freight rate on the order of 50% less than is usually encountered.

A further object is to devise a prefabricated chimney which can be installed with considerably less labor than has heretofore been possible. In this connection,

chimneys constructed in accordance with the present invention can be installed in a few minutes, as compared to an hour or more for prior-art chimneys.

Yet another object is to provide a simplified building construction in which the sheet metal chimney components are supported from the chimney casing above the roof and require no mounting or support below the roof level.

In order that these and other advantages of the invention may be understood in detail, reference is had to the accompanying drawings, which form a part of this specification, and wherein:

Fig. 1 is a vertical sectional view of a building construction in accordance with one advantageous embodiment of the invention;

Fig. 1ª is a detail vertical sectional view, illustrating a portion of Fig. 1 on increased scale for clarity;

Fig. 2 is a horizontal sectional view taken on line 2—2, Fig. 1;

Fig. 3 is a horizontal sectional view taken on line 3—3, Fig. 1;

Fig. 4 is an exploded view in perspective showing a special flashing unit employed in the device of Fig. 1;

Fig. 5 is a fragmentary vertical sectional view taken on line 5—5, Fig. 1;

Fig. 5ª is a detail vertical sectional view, illustrating a portion of Fig. 5 on enlarged scale for clarity;

Fig. 6 is an elevational view, on smaller scale, showing the device of Fig. 1 in collapsed form;

Fig. 7 is a vertical sectional view, similar to Fig. 1, of another embodiment of the invention, and

Fig. 8 is a vertical sectional view, similar to Fig. 1, of a further embodiment of the invention.

Referring now to the drawings in detail, and first to Figs. 1–5ª thereof, it will be seen that the embodiment of the invention here illustrated includes a low-pitch roof 1 provided with an opening 2 surrounded by an upstanding casing 3. The casing has vertical sheet metal sidewalls 4 joined to form an open-top enclosure of square cross-section, and is completed by a cap 5 supported by vertical struts 6. Cap 5 is in the form of an inverted pan with its dependent sides spaced from the walls 4 of the casing to provide an exit for the gases rising through the chimney casing.

The casing 3 is mounted on roof 1 by means of a flashing unit illustrated in detail in Figs. 3 and 4, this flashing unit per se forming the subject matter of my copending application, Serial Number 567,584, now Patent No. 2,800,850, filed concurrently herewith.

The flashing unit is constructed in two halves 7 and 8, Fig. 4, adapted to be moved into overlapping relationship to embrace the intermediate air pipe 9 of the chimney duct unit hereinafter described. Each half of the flashing unit includes a flat sheet metal base 10, 10′ of generally rectangular form and provided with a notch 11, 11′, respectively. Each notch has a semi-circular bottom of such size as to fit the periphery of air pipe 9, and straight sides to allow free entry of the air pipe. Disposed outwardly from such notches, and generally parallel thereto, are flange members 12, 12′ of angular cross-section, these flanges being mounted on base elements 10, 10′, respectively, as by having their bottom webs spot welded to the base elements. The flange members 12, 12′ are of such size and shape that the upstanding webs 13, 13′ thereof will be received within the bottom end of the casing 3 when the flashing unit is assembled.

As seen in Fig. 4, the base member 10 of the flashing unit is provided with slots 14 closely adjacent and parallel to the portions of flange member 12 which lie parallel to the sides of notch 11. Thus, when the two halves of the flashing unit are brought together by sliding base

member 10' under member 10, the ends 15 of the flange member 12' enter into the slots 14. In this connection, it will be understood that the ends 15 of flange member 12' are spaced somewhat more closely together than are the ends of flange member 12 so that, when notches 11, 11' are aligned, ends 15 are aligned with slots 14.

When the flashing unit is assembled about the air pipe 9, it is nailed in place on the roof 1 as seen in Fig. 1. The casing is then placed in position and mounted by means of brackets 3a Fig. 3, using sheet metal screws or other suitable fasteners. As seen in Fig. 5a, the overlapped portions of the flashing members do not originally lie flush in face-to-face contact because the base web of flange member 12' intervenes. However, both the base sheets 10, 10' and the flange members 12, 12' may be of relatively light sheet metal, on the order of 30 gauge, for example, so that nailing of the flashing in place brings the base sheets together at their edges, as seen in Fig. 5a.

Referring again to Fig. 1, it will be seen that the chimney assembly comprises, in addition to the intermediate air pipe 9, an inner smoke pipe or flue 16 and an outer air pipe 17, all preferably concentrically arranged. Intermediate air pipe 9 is in three telescoped sections 9a, 9b and 9c. Flue or smoke pipe 16 is also telescopic, comprising two sections 16a and 16b. Outer air pipe 17 also is telescopic, including two sections 17a and 17b. At its bottom end, outer air pipe 17 is closed by a plate 18 having an outer annular flange 18a fastened to the outer air pipe, as by sheet metal screws, and a centrally disposed circular opening engaging the periphery of the smoke pipe 16 below bead 19.

The top of upper section 16a of the flue or smoke pipe is rigidly connected to section 9b of the intermediate air pipe by a metal strap 20. The lower end of bottom section 9c of intermediate air pipe is rigidly connected with bottom closure plate 18 by circumferentially spaced links 21 welded at one end to the intermediate air pipe and at the other end, provided with bent out portions secured to plate 18 by sheet metal screws or the like. Between sections 9b of the intermediate air pipe and 17a of the outer air pipe is disposed a hexagonal spacing member 22, Fig. 2, secured to section 9b of the intermediate air pipe, as by sheet metal screws at points 23. Metal straps 24 are secured at one end to member 22 and extend downwardly and outwardly, their lower ends being secured to the inner surface of section 17a of the outer air pipe.

The telescopic joints between sections 16a and 16b of the smoke pipe, and sections 17a and 17b of the outer air pipe, are simple slip joints. The ends of the telescoped sections of intermediate air pipe 9, however, are provided with rolled beads, as illustrated in Fig. 1a, the bead on the outermost member being internal and that on the innermost member being external. Thus, with pipe 9 fully extended, section 9b thereof is supported from section 9a, while section 9c is in turn supported from section 9b. Since bottom closure plate 18 is rigidly connected both to the lowermost section 9c of intermediate pipe 9 and to the bottom section 17b of the outer pipe by links 21, section 17b is obviously supported from the intermediate air pipe. Similarly, since bead 19 engages plate 18, the lower section 16b of the smoke pipe or flue is supported from the intermediate air pipe 9. On the other hand, upper section 17a of the outer air pipe is supported from the middle section 9b of the intermediate air pipe, by straps 24, while top section 16a of the smoke pipe is similarly supported by strap 20. Thus all parts of the duct assembly are supported by the intermediate air pipe 9.

At its top end, upper section 9a of the intermediate air pipe is provided with a reenforcing collar 25 and, at diametrically spaced points, a pair of outwardly offset, downwardly projecting lugs 26, Figs. 3–5. As best seen in Fig. 4, base element 10 of the flashing unit is provided with a pair of brackets 27. Brackets 27 are of right angle cross section, having one web secured to element 10 and the other web extending vertically upward therefrom. Brackets 27 are spaced apart by a distance such that the vertically extending webs thereof are slightly closer together than the downwardly projecting lugs 26. Thus, lugs 26 engage over the vertical webs of brackets 27 to provide means for supporting the intermediate air pipe 9, and thus the entire duct assembly.

In the preamble, reference is made to low pitch roofs commonly known as of the "cathedral" type. With such roofs, the space between the roof and ceiling is relatively small, and, moreover, varies from point to point, over a wide area. The telescopic structure of the present invention is particularly well adapted for installation in this type of building.

To install this chimney structure in a building, the hole 2 is first cut in the roof, large enough to accommodate the outer pipe 17, and the chimney duct assembly, comprising pipes 9, 16 and 17, is lowered through the hole into approximate position. The two halves of the flashing unit are then slid into place, with notches 11, 11' thereof engaging the periphery of top section 9a of the intermediate air pipe. The duct assembly is then adjusted about its axis until lugs 26 are aligned with brackets 27, the duct assembly then being lowered into final position with the assembly being supported by interengagement of lugs 26 and brackets 27. In this connection, it will be noted that the lower end of the duct assembly, defined by closure member 18, should be positioned at the ceiling line. To make certain that this occurs, the telescopic structure may be adjusted to the desired length before being lowered into place. Alternately, the duct assembly may be provided with means for adjustment, advantageously with such means being operable from the roof after the duct assembly is lowered into place. Thus, as seen in Fig. 1, such means may take the form of a plurality of pieces of steel strapping 28 riveted at their lower ends to section 9c of the intermediate pipe and extending upwardly between that pipe and flue 16. After the duct assembly has been lowered into place, with the assembly extended to its full length, the workman adjusts the length of the assembly by pulling up the strapping 28, the free ends thereof being then nailed to the roof through the flashing in such manner that the strapping is tensioned across the top of intermediate pipe section 9a.

The casing 3 is then placed in position on the flashing unit and secured thereto by means of brackets 3a.

Considering now the completed assembly as shown in Fig. 1, it will be noted that the outer air pipe 17 is open at the top and therefore communicates with the air space immediately below roof 1. It will also be seen that the annular space between outer pipe 17 and intermediate pipe 9 communicates with the annular space between intermediate pipe 9 and flue or smoke pipe 16, and that this latter annular space opens into the interior of casing 3. The interior of the casing is otherwise closed, at the bottom, by the flashing unit which constitutes a diaphragm. When the flue 16 is in operation, air in the annular space between such flue and the intermediate pipe 9 is heated, and therefore rises, thus inducing air from the space below the roof to enter the space between pipes 17 and 9, which air flows downwardly through such space into the space between pipes 9 and 16, and thence upwardly about pipe 16, into casing 3, and out to the atmosphere through chimney cap 5.

It will be noted that, in this embodiment, the smoke pipe 16 terminates short of the upper end of the intermediate pipe 9, so that this construction provides an air-jet action as described in my aforementioned Patent 2,713,301. It is to be understood, however, that the improvements of the present invention can be applied advantageously to other types of air duct, prefabricated chimney structures.

A particular characteristic of the construction just described is its adaptability for shipment in a single package, rather than several separate packages as heretofore

required. As seen in Fig. 6, the complete duct system, comprising pipes **9**, **16** and **17**, telescopes or collapses to a size such that it may be disposed substantially entirely within the confines of casing **3**, the length of each of the sections of all of said pipes being approximately the same as the height of said casing, including the cap **5**. For packaging, the flashing unit is disposed beside the casing **3**, and the entire structure then placed in a single shipping container.

A simplified embodiment of the invention is illustrated in Fig. 7. Here, only the intermediate air pipe **109** is telescopic, comprising an upper section **109a** and a lower section **109b**. The outer pipe **117** is a single piece, closed at the bottom by plate **118**. Again, plate **118** has a central opening engaging the periphery of smoke pipe **116** beneath bead **119**. The bottom end of section **109b** of the intermediate air pipe is connected rigidly to plate **118** by legs **121**. Thus, outer pipe **117** and smoke pipe **116** are both supported by section **109b** of the intermediate pipe and, because of the beaded ends of sections **109a** and **109b**, the entire assembly depends from supporting lugs **126** engaging brackets (not shown) on the flashing **110—113'**, in the same manner described with reference to the embodiment of Figs. 1–6. It will thus be seen that the structure of Fig. 7 has all the characteristics of the longer chimney structure of Figs. 1–6, except that it is unnecessary here to provide elements equivalent to straps **20** and **24**, Fig. 1.

In the embodiments of Figs. 1 and 7, the special flashing unit of Fig. 4 is employed, so that the flashing unit closes the space between the casing and the top of the intermediate air pipe. Further, these two constructions are characterized by the fact that, since the flashing unit acts as a diaphragm across the casing at the bottom thereof, air must be inducted into the outer air pipe from below the roof. It will be understood that the top of the intermediate air pipe can be connected with a diaphragm extending across the chimney casing or box at any desired point. Further, if the diaphragm is sufficiently high in the casing, outside air may be inducted into the duct assembly via the portion of the casing below the diaphragm.

In this connection, reference is had to Fig. 8, illustrating a chimney constructed in the manner just mentioned. Here, casing **203** is supported on roof **201** by conventional flashing **210**, the flashing extending into contact with the periphery of outer pipe **217** to close the bottom of the casing. Like the embodiments of the invention previously described, casing **203** is provided with a chimney cap **205** supported on struts **206**.

Struts **206** are provided with ears **206'**, substantially at the top of casing **203**. A sheet metal diaphragm **230** extends across the casing top and is secured to ears **206'**, as by sheet metal screws, the diaphragm being provided with suitably positioned apertures to accommodate the struts **206**. At its center, diaphragm **230** is provided with a circular opening having an upstanding flange. The upper end of top section **209a** of the intermediate air pipe **209** extends through said opening and is rolled over the flange, so that pipe **209** depends solely from the diaphragm **230**.

Intermediate air pipe **209** comprises telescoped sections **209a** and **209b**, the latter being rigidly attached at its lower end to annular closure plate **218** by legs **221**. The bottom of outer pipe **217** is rigidly connected to plate **218**, so that the plate **218** closes pipe **217** but the space between that pipe and pipe **209** communicates with the interior of pipe **209**. Smoke pipe **216** extends through the central opening of annular plate **218** and is provided with an exterior bead resting on the top of plate **218**. Thus, single section pipes **217** and **216** are both supported by dual section, telescopic, intermediate pipe **209**.

At its lower end, section **209a** is provided with an outwardly rolled bead. At its upper end, section **209b** is provided with an inwardly rolled bead. These beads respectively engage the inner surface of section **209b** and the outer surface of section **209a** to provide a sliding joint of such stiffness that, while the effective length of pipe **209** can be adjusted manually, pipe **209** will support the remainder of the duct assembly without further sliding of the joint. Thus, pipes **217** and **216** are supported from diaphragm **230** solely through telescopic pipe **209**.

It will be noted that outer pipe **217** extends well above the roof level into the interior of casing **203**, and that the casing is provided with side openings at **231**. Thus, outside air is inducted through the casing below diaphragm **230** into the space between outer pipe **217** and intermediate pipe **209**. Air flow in the duct system is otherwise as explained hereinbefore with reference to Figs. 1–7.

While the embodiments discussed have been chosen to illustrate certain advantageous features, it is obvious that various modifications can be made without departing from the scope of the invention. Thus, for example, the outer pipe **17**, Fig. 1, may extend upwardly into the casing **3**, to provide additional insulation between the smoke pipe and the roof, air then being inducted into the air duct system through the casing instead of from below the roof level. Similarly, in Fig. 1, the entire duct assembly may depend from a diaphragm extending across the interior of the casing at any desired point, rather than employing the flashing at the bottom of the casing as the diaphragm.

I claim:

1. In a building construction, the combination of a roof having an opening; a hollow chimney casing mounted on said roof surrounding said opening and extending upwardly therefrom, said casing having an exhaust opening communicating with the atmosphere; an intermediate air pipe comprising a plurality of telescopically engaged sections and being adjustable in length by relative axial movement of such sections, said intermediate air pipe being disposed in alignment with said opening in said roof and extending therethrough; first closure means extending between the walls of said casing and the uppermost section of said intermediate air pipe and closing the space therebetween against air flow; means fixed to said intermediate air pipe and engaged over said first closure means to suspend said intermediate air pipe from said first closure means; an outer air pipe surrounding said intermediate air pipe; a smoke pipe disposed within said intermediate air pipe; second closure means mounted on said intermediate air pipe at the bottom thereof and extending between said outer air pipe and said smoke pipe to close the space therebetween against air flow, there being an opening communicating between the space between said outer and intermediate air pipes and the space between said intermediate air pipe and smoke pipe above said second closure means, whereby air may flow downwardly between said outer and intermediate air pipes to a point adjacent said second closure means and hence upwardly between said intermediate air pipe and smoke pipe into said casing, and said smoke pipe and outer air pipe each being provided with means engaging said second closure means for vertical support of said smoke pipe and outer air pipe.

2. The construction defined in claim 1 and in which said outer air pipe and smoke pipe each include two telescopically engaged sections, the upper section of said outer air pipe and the upper section of said smoke pipe each being provided with means connecting the same to the upper section of said intermediate air pipe for vertical support thereby.

3. The construction defined in claim 1 and wherein said outer air pipe comprises a single unit of pipe connected to and supported by said second closure means.

4. In a building construction, the combination of a roof having an opening; a hollow casing mounted on said

roof, said casing being larger than said opening, surrounding the same and extending upwardly therefrom, said casing having an exhaust opening communicating with the atmosphere; a collapsible duct assembly capable of being lowered bodily through said opening in the roof, said assembly being aligned vertically with respect to said casing and comprising a smoke pipe, an intermediate air pipe surrounding said smoke pipe and an outer air pipe surrounding said intermediate air pipe, at least said intermediate air pipe being formed of telescopic sections, said intermediate air pipe extending upwardly through said opening in the roof into said casing and being spaced inwardly from the walls of said casing, the upper end of said outer air pipe being disposed at a point below the upper end of said intermediate air pipe and said outer air pipe extending downwardly at least to the lower end of said intermediate air pipe; a transversely disposed plate closing the space between the lower end of said outer air pipe and said smoke pipe, said plate being attached to said outer air pipe and having an opening through which said smoke pipe extends, said smoke pipe having means engaging the upper surface of said plate whereby said smoke pipe is supported by said plate; supporting means positively connecting said plate to said intermediate air pipe, whereby both said outer air pipe and said smoke pipe are supported by and depend from said intermediate air pipe by reason of their connection to said plate; closure means in the nature of a fixed diaphragm separate from said roof bridging the space between said casing and said intermediate air pipe, means rigidly mounting said closure means at a point bove said opening in the roof and below said exhaust opening, and laterally extending means fixed to said intermediate air pipe and engaged with said closure means to support said duct assembly from said closure means, said duct assembly including an opening adjacent and above said plate and communicating between the space between said outer and intermediate air pipes and the space between said intermediate air pipe and said smoke pipe, whereby air can flow downwardly between said outer and intermediate air pipes and then upwardly between said intermediate air pipe and smoke pipe and into said casing.

5. A building construction in accordance with claim 4 and wherein said closure means is a flashing unit secured to the upper surface of said roof and extending into peripheral engagement with said intermediate air pipe, the upper end of said outer air pipe being disposed below said roof.

6. A building construction in accordance with claim 4 and wherein said closure means is a diaphragm disposed above said roof, said diaphragm being secured to the walls of said casing and extending into peripheral engagement with said intermediate air pipe, said outer air pipe extending through said opening in said roof into the interior of said casing, the upper end of said outer air pipe being disposed below said diaphragm.

7. A building construction in accordance with claim 4 and wherein the telescopic sections of said intermediate air pipe engage each other in a relatively tight friction fit capable of manual adjustment lengthwise of the duct assembly but sufficiently tight to remain in any desired adjusted position and afford complete support for said outer air pipe and smoke pipe.

8. In a prefabricated chimney, the combination of a hollow casing constructed to be mounted on a building roof and having one end open; a diaphragm extending across said casing and having an opening therein; a duct assembly comprising a smoke pipe, an intermediate air pipe surrounding said smoke pipe and an outer air pipe surrounding said intermediate air pipe, all of said pipes being made up of a plurality of telescoping sections whereby the pipes can be collapsed endwise into a relatively short space for shipping or extended to form a relatively long duct assembly in use, the length of the longest of said sections being substantially no greater than that of the casing, and said casing being larger in transverse dimension than said outer air pipe, whereby the entire duct assembly, when collapsed, can be housed within said casing, said duct assembly comprising a bottom closure member mounted on said intermediate air pipe and fixed to said outer air pipe, said closure member having an opening through which said smoke pipe extends and said smoke pipe including a lateral projection engaged over said closure member; means fixedly mounting said diaphragm on said casing; and means fixed to the upper end of said intermediate air pipe and engageable over said diaphragm, when the upper end of said intermediate air pipe is disposed in said opening in said diaphragm, to support the entire duct assembly.

9. A building construction in accordance with claim 4 and wherein said outer air pipe and smoke pipe are each made up of two telescoping sections, the telescopic sections of said intermediate air pipe being provided with interengaging beads effective as stop means to limit extension of said intermediate air pipe to a predetermined length, the upper sections of said outer air pipe and smoke pipe each being rigidly connected to a section of said intermediate air pipe.

10. A building construction in accordance with claim 1 and further comprising adjusting means operable manually from said roof for adjusting the axial positions of said telescopic sections, said adjusting means including an elongated member having one end disposed at said roof and the other end attached to one of said telescopic sections, said elongated member extending within said intermediate air pipe.

References Cited in the file of this patent

UNITED STATES PATENTS

70,993	Goodsell	Nov. 19, 1867
340,299	Eberhart	Apr. 20, 1886
728,083	Childers	May 12, 1903
1,404,742	Condit	Jan. 31, 1922
2,130,385	Fluor et al.	Sept. 20, 1938
2,201,312	Hauser	May 21, 1940
2,358,397	Howle	Sept. 19, 1944
2,372,707	Blome	Apr. 3, 1945
2,376,642	Waterman et al.	May 22, 1945
2,404,530	Resek	July 23, 1946
2,634,720	Thulman	Apr. 14, 1953