United States Patent

Baxter et al.

[15] **3,650,617**

[45] **Mar. 21, 1972**

[54] SWITCHING DETECTOR

[72] Inventors: **Carlton J. Baxter,** Penfield; **S. William Volkers,** Williamson, both of N.Y.

[73] Assignee: **Xerox Corporation,** Rochester, N.Y.

[22] Filed: **Feb. 1, 1971**

[21] Appl. No.: **111,405**

[52] **U.S. Cl.** **355/3,** 117/17.5, 118/637, 271/57

[51] **Int. Cl.** **G03g 15/00,** B65h 7/06

[58] **Field of Search** .....355/3, 8, 14, 17; 118/637; 250/49.5 ZC; 96/1.4; 117/17.5; 271/57

[56] **References Cited**

UNITED STATES PATENTS

3,360,652	12/1967	Bernous	118/637 X
3,506,259	4/1970	Caldwell et al.	117/17.5 X

FOREIGN PATENTS OR APPLICATIONS

1,238,492	4/1967	Germany	271/57

Primary Examiner—Samuel S. Matthews
Assistant Examiner—Robert P. Greiner
Attorney—James J. Ralabate, William Kaufman and Barry Kramer

[57] **ABSTRACT**

In an electrostatographic copying machine in which a developed image on the surface of a reproducing member is transferred to a transfer sheet in contact with said image, a device is provided for detecting the undesired continued presence of the transfer sheet on the reproducing surface after the image has been transferred, said device including a power source for providing a current flow between an electrode and the reproducing surface at a point beyond the image transfer area and a switching circuit coupled to the electrode and power source for indicating a change in the current flow caused by the presence of the transfer sheet between the electrode and the surface, thereby indicating continued contact of the transfer sheet with the reproducing surface. The switching detector includes a light sealed photodetector light source unit which electrically isolates the current flow portion from the detector portion. The switching circuit can be used to discontinue the operation of the machine.

4 Claims, 5 Drawing Figures

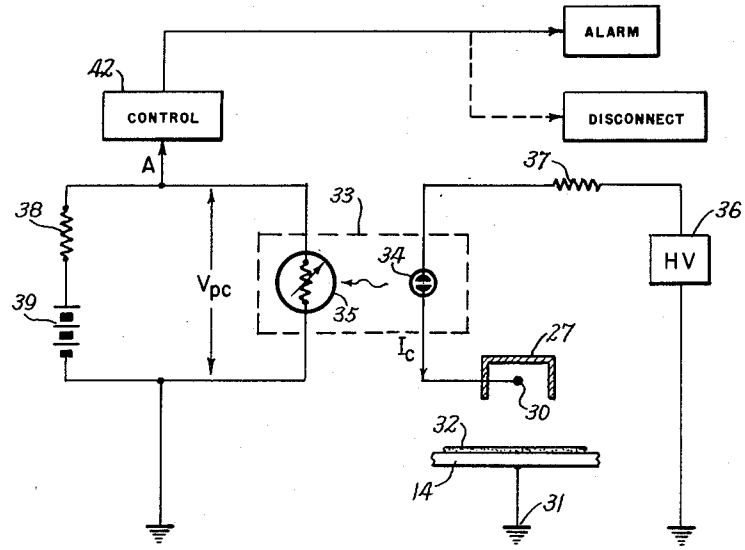

Patented March 21, 1972 3,650,617

3 Sheets-Sheet 1

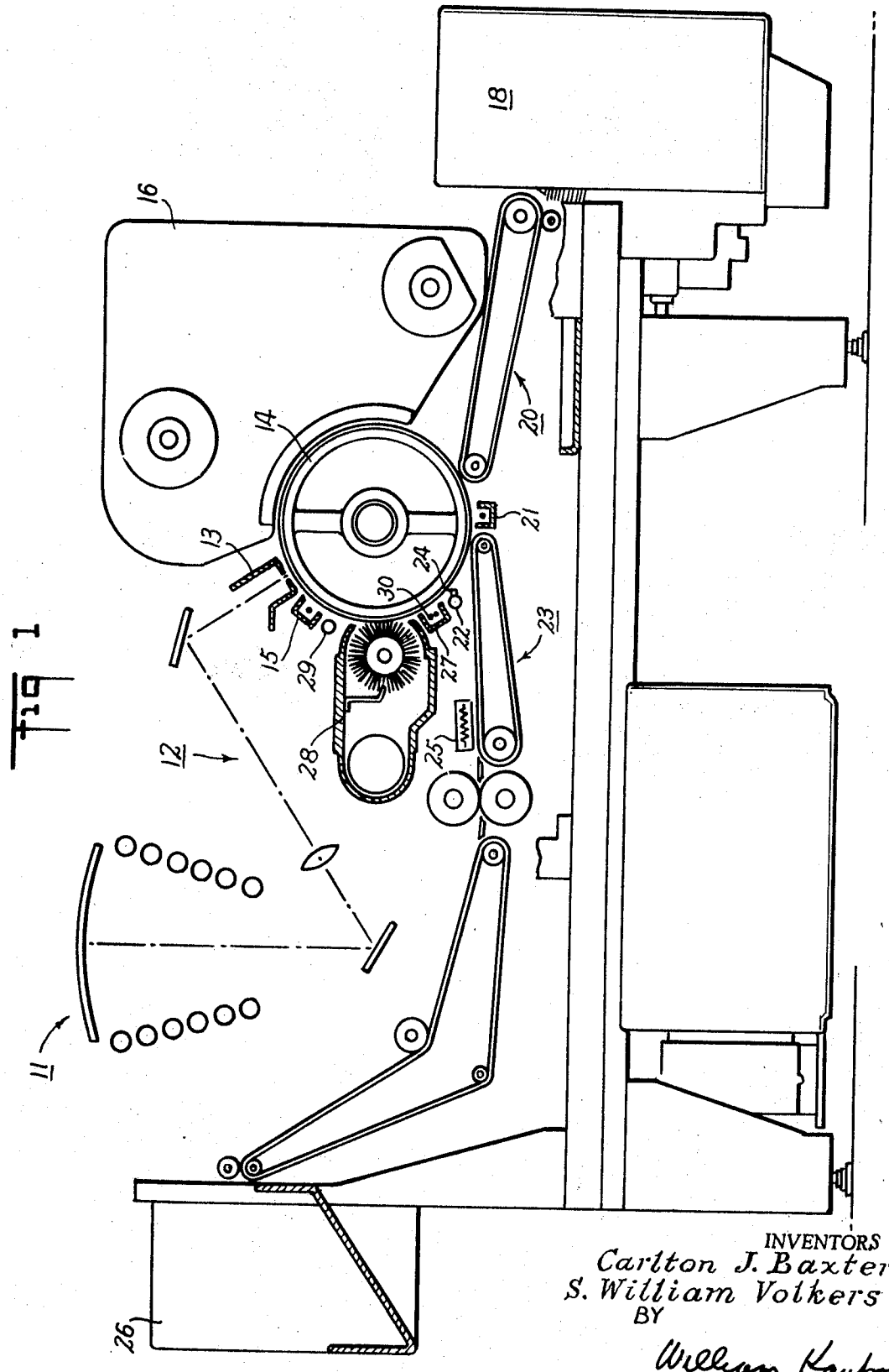

Fig 1

INVENTORS
Carlton J. Baxter
S. William Volkers
BY
William Kaufman
ATTORNEY

Fig 2

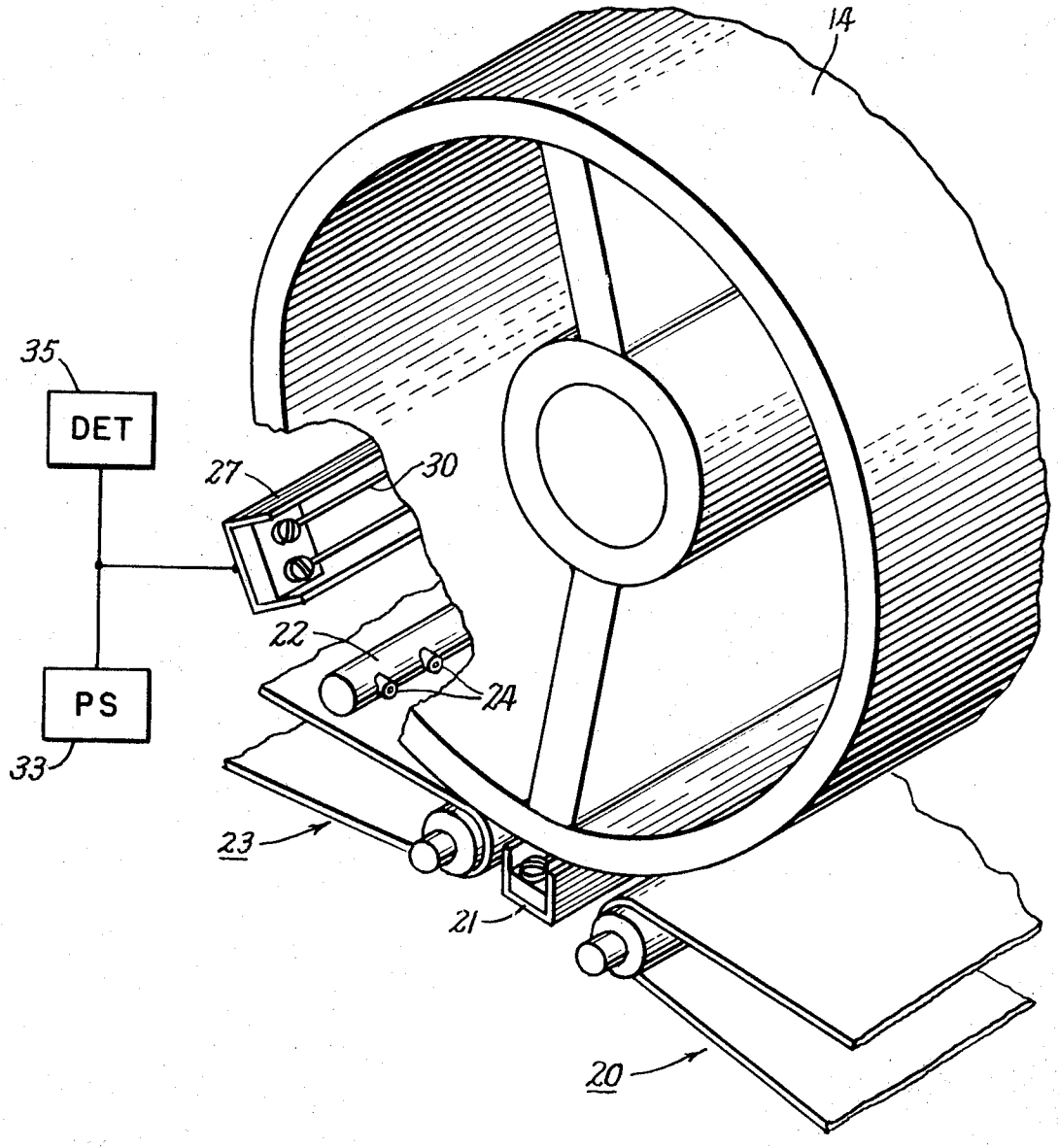

FIG 3

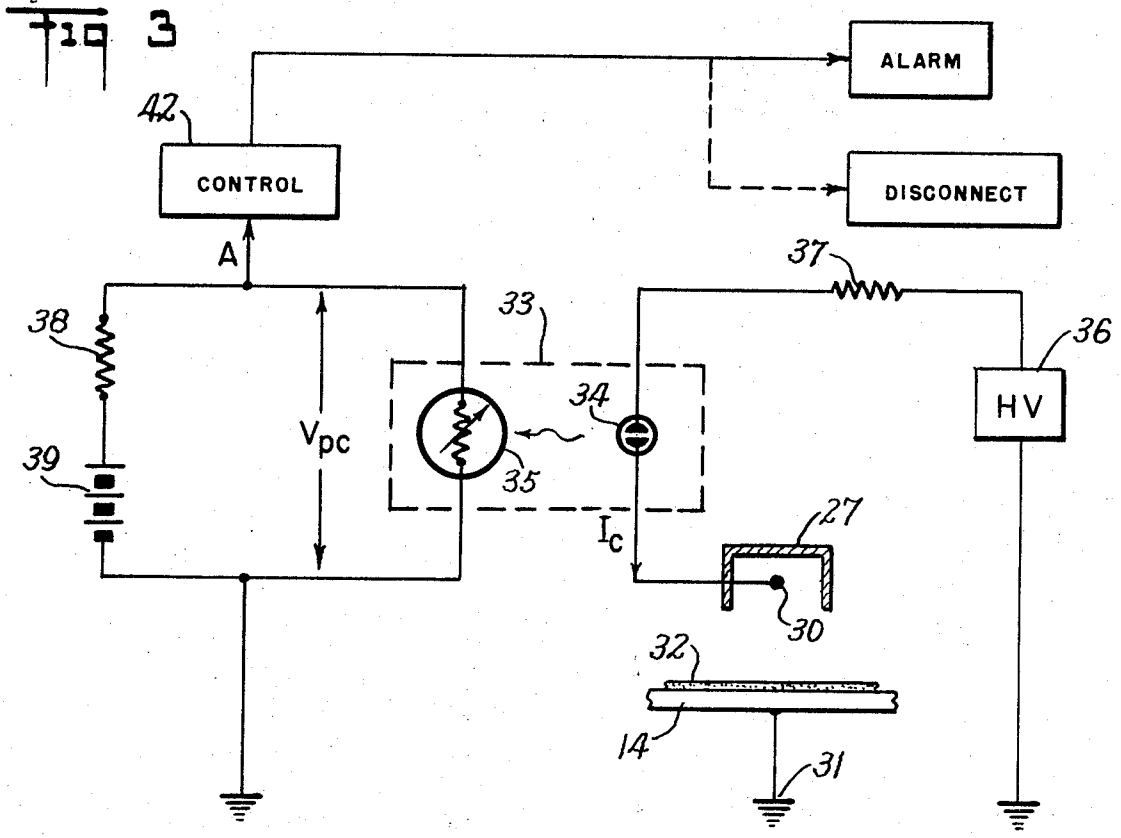

FIG 4A

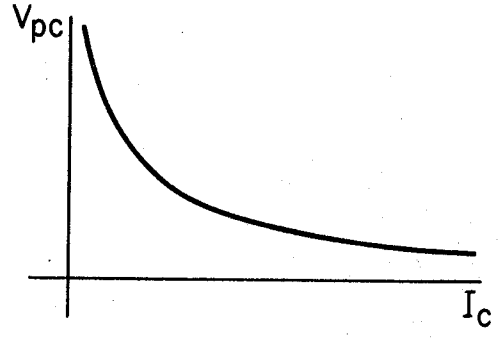

FIG 4B

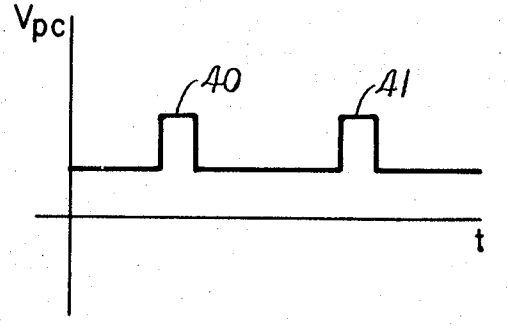

SWITCHING DETECTOR

This invention relates to electrostatographic reproduction and more particularly to electrostatographic reproducing apparatus adapted to automatically detect any malfunction preventing timely removal of the transfer material from the surface of the reproducing member hereinafter referred to as the reproducing surface.

The formation and development of images employing photoconductive materials by electrostatic means is well known. The basic electrostatographic process, as taught by C. F. Carlson in U.S. Pat. No. 2,297,691, involves placing a uniform electrostatic charge on a photoconductive insulating layer, exposing the layer to a light-and-shadow image to dissipate the charge on the areas of the layer exposed to the light and developing the resulting electrostatic latent image by depositing on the image a finely divided electroscopic material referred to in the art as "toner." The toner will normally be attracted to those areas of the layer which retain a charge, thereby forming a toner image corresponding to the electrostatic latent image. This powder image may then be transferred to a receiving surface such as paper, and the insulating layer neutralized with an electrostatic charge application such as by a corona discharge. The transferred image may be subsequently permanently affixed to a support surface by heat. Instead of latent image formation by uniformly charging the photoconductive layer and then exposing the layer to a light-and-shadow image, one may form the latent image by other means such as directly charging the layer in image configuration. Any other suitable fixing means such as solvent or overcoating treatment may be substituted for the foregoing heat fixing step.

Similarly other methods are known for applying the electroscopic particles to the electrostatic latent image to be developed. Included within this group are the "cascade" development technique disclosed by E. N. Wise in U.S. Pat. No. 2,618,552; the "powder cloud" technique disclosed by C. F. Carlson in U.S. Pat. No. 2,221,776 and the "magnetic brush" process disclosed, for example, in U.S. Pat. No. 2,874,063.

A difficulty often encountered in apparatus embodying such electrostatographic processes is that jamming can be caused by failure of the transfer material to be timely removed from the photoconductive surface, after transfer to the image. One solution has been to employ a photodetection device wherein a light source directs a beam of light upon the reproducing surface which is reflected off said surface to a photo cell. This photodetection device is positioned at a point on the reproducing surface immediately past the position at which the transfer material is removed. Failure of the transfer material to be timely removed is thus optically detected and an appropriate signal generated for disconnecting the mechanism from the power source to prevent jamming. A disadvantage of photo-optical devices employing light reflected from the reproducing surface, however, lies in their inherent unreliability in field use, their susceptibility to erroneous indications due to ambient light levels and to the buildup of foreign matter interfering with optical path, their expense, and the inconvenience of adding additional components to the mechanism. Another solution utilizes mechanical fingers which contact the drum and position sense the presence or absence of improperly positioned transfer material. However, this method can result in fatigue and physical damage of the reproducing member due to finger contact.

One proposed solution utilizes a corona preclean unit, normally used to provide a neutralizing charge to the reproducing surface after image transfer, to provide a current flow differential in response to failure of removal to energize a machine stop sequence. Proper detection of this current flow differential can be employed to provide the indication of improper operation desired. It is important, however, in this latter type of detection, to ensure that the detecting circuit can respond to low level signal changes, can isolate the corona current from the external control signal, and is relatively free of external influences.

It is, therefore, a primary object of this invention to provide an improved means for detecting malfunction in a reproducing mechanism.

It is a further object of this invention to provide an improved arrangement for detecting malfunctions caused by jamming of transfer material in an electrostatographic device utilizing existing components within the electrostatographic device without interference due to foreign matter or ambient light levels.

It is still further object of the invention to provide an improved noncontacting arrangement for detecting failure of transfer material to be timely removed from a reproducing surface, which arrangement is reliable in operation and relatively inexpensive.

The foregoing objects are accomplished by providing a current flow between an electrode and the photoconductive surface at a position immediately past the point at which the transfer material is normally removed. The presence of transfer material on the reproducing surface will serve to alter the current flow between the electrode and the photoconductive surface. The electrode can be coupled to suitable electrical circuitry which will respond to the change in current flow level and thereby indicate the presence of transfer material past its point of proper removal. Such indication can be employed to disconnect the mechanism from its power source, and thus prevent jamming. In the electrostatographic device, the corona preclean unit may be employed as the current electrode. The electrical circuitry providing the desired indication in the form of a control signal employs a light sealed photodetector—light source which electrically isolates the detector from the effect of the corona current.

The foregoing objects and brief description of the invention as well as further objects will become more apparent from the following detailed description of a preferred embodiment, with reference to the appended drawings wherein:

FIG. **1** is a schematic view of an electrostatographic reproducing apparatus in elevation;

FIG. **2** is a partial isometric view of the transfer station and photoconductive surface showing the use of the present invention;

FIG. **3** is a schematic representation of a circuit for providing an indication of a change in current flow, caused by failure of removal of transfer material, in accordance with the invention; and

FIGS. **4A** and **4B** are waveform diagrams illustrating the operation of the invention with respect to time.

Referring now to FIG. **1**, a typical electrostatographic reproducing apparatus is shown.

For a general understanding of the processing system in which the present invention is incorporated, reference is had to FIGS. **1** and **2** wherein like numerals refer to like components in which the various system components are schematically illustrated. In the electrostatographic system shown, a light image of copy to be reproduced is projected onto the charged surface of an electrostatographic plate to form an electrostatic latent image thereon. Thereafter, the latent image is developed with an oppositely charged electroscopic developing material to form a powder image, corresponding to the latent image, on the plate surface. The powder image can then be electrostatically transferred to a web of suitable transfer material in sheet form to which it may be fused by a fusing device, whereby the powder image is caused permanently to adhere to said transfer sheet material.

In the system disclosed herein, documents to be reproduced are placed at the imaging station, generally designated by reference character **11**, which includes a light projecting system, for the purpose of scanning. The illuminated data is projected downwardly by means of a mirror-lens imaging assembly **12** and through a slit aperture assembly **13** and onto the reproducing surface of an electrostatographic plate in the form of a drum **14**.

The electrostatographic drum **14** includes a cylindrical member mounted in suitable bearings in the frame of the machine and is driven in a clockwise direction as viewed in

FIG. 1 by a motor at a constant rate that is proportional to the scan rate whereby the peripheral rate of the drum surface is substantially identical to the rate of movement of the reflected light image. The drum surface comprises a layer of photoconductive material on a grounded conductive backing that is sensitized prior to exposure by means of a corona generating device **15**.

The exposure of the drum surface to the light image discharges the photoconductive layer in the areas struck by light, whereby there remains on the drum a latent electrostatic image in image configuration corresponding to the light image projected. As the drum surface continues its movement, the electrostatic latent image passes through a developing station in which there is positioned a developer apparatus including a housing **16** for developing material. A suitable driving means is used to carry the developing material to the upper part of the developer housing where it is cascaded down over a hopper chute onto the electrostatographic image on the drum.

As the developing material is cascaded over the electrostatographic drum, toner particles are pulled away from the carrier component of the developing material and deposited on the drum to form powder images, while the partially denuded carrier particles pass off the drum into the developer housing sump.

Positioned next and adjacent to the developing station in a clockwise direction is an image transfer station which includes a sheet feeding mechanism adapted to feed sheets successively to the developed image on the drum at the transfer station. This sheet feeding mechanism, generally designated **18**, includes a sheet source for a plurality of sheets of a suitable transfer material that is typically, sheets of paper or the like, a separating roller adapted to feed the top sheet of the stack to feed belt and rollers **20** which direct the sheet material into contact with the rotating drum at a speed preferably slightly in excess of the rate of travel of the surface of the drum in coordination with the appearance of the developed image at the transfer station. In this manner, the sheet material is introduced between the feed rollers and is thereby brought into contact with the rotating drum at the current time and position to register with the developed image. To effect proper registration of the sheet transfer material with the feed roller and to direct the sheet transfer material into contact with the drum, guides are positioned on opposite sides of the feed rollers.

The transfer of the powder image from the drum surface to the transfer material is effected by means of a corona transfer device **21** that is located at or immediately after the point of contact between the transfer material and the rotating drum. The corona transfer device **21** is substantially similar to the corona discharge device **15** in that it includes an array of one or more corona discharge electrodes that are energized from a suitable high potential source and extend transversely across the drum surface and are substantially enclosed within a shielding member.

In operation, the electrostatic field created by the corona transfer device is effective to tack the transfer material electrostatically to the drum surface, thus causing the transfer material to move synchronously with the drum while in contact therewith. Simultaneously with the tacking action, the electrostatic field is effective to attract a significant portion of the toner particles, forming the powder image, from the drum surface and cause them to adhere electrostatically to the surface of the transfer material.

Immediately subsequent to the image transfer station is positioned a transfer material stripping apparatus or paper pickoff mechanism, generally designated **22**, for removing the transfer material from the drum surface. This device includes a plurality of small diameter, multiple outlet conduits **24** of a manifold that is supplied with pressurized aeriform fluid through the outlet conduits into contact with the surface of the drum slightly in advance of the sheet material to strip the leading edge of the sheet material from the drum surface and to direct it onto a horizontal conveyor **23**. The sheet material is then carried to a fixing device in the form of a fuser assembly **25**, whereby the developed and transferred powder image on the sheet material is permanently fixed thereto.

After fusing, the finished copy is preferably discharged from the apparatus at a suitable point **26** for external collection, in a copy collector positioned at a convenient place for copy removal by the machine operator.

The next and final station in the device is a drum cleaning station having positioned therein a corona precleaning device **27** similar to the corona charging device **15**, to impose an electrostatic charge on the drum and residual powder adherent thereto to more readily permit removal of residual or untransferred toner. To aid in effecting removal of the powder a drum cleaning device **28**, adapted to remove any powder remaining on the drum surface after transfer, is also provided as is a source of light **29** whereby the photoconductive drum is flooded with light to cause dissipation of any residual electrical charge remaining thereon.

In general, the electrostatic charging of the electrostatographic drum is in preparation for the exposure step and the electrostatic charging of the support surface to effect transfer are accomplished by means of corona generating devices whereby electrostatic charge is applied to the respective surfaces. Although any one of a number of types of corona generating devices may be used, a corona charging device of the type disclosed in Vyverberg U.S. Pat. No. 2,836,725 is used for both the corona charging device **15**, the corona transfer device **21**, and the corona precleaning device **27**, each of which is secured to suitable frame elements of the apparatus and connected to suitable power sources.

As will be evident from FIGS. **1** and **2**, the paper pickoff mechanism **22** is positioned just past the image transfer station. Failure of the burst or puff of aeriform fluid to dislodge the transfer material from the drum **14** at that point will result in jamming of the reproducing apparatus by the sheet material. Such failure is commonly referred to as a "miss-puff".

Detection of the miss-puff or failure to remove transfer material is accomplished in accordance with the present invention through use of the corona precleaning device **27**, in conjunction with the circuit as shown in FIG. **3**.

The principle of operation involves the discontinuity in the level of flow of current from the corona precleaning device **27** caused by alteration of the flow of current between the corona device and the reproducing surface of the drum **14**. The disruption is that created by the miss-puff, i.e., the continued presence of the transfer material in contact with the drum surface.

Referring to FIG. **3**, a circuit for detecting the current discontinuity is shown. Using like reference numerals to represent like components, FIG. **3** shows a corona precleaning device **27** having at least one electrode **30**. The drum **14** is connected to an electrical reference point **31** illustrated as ground, and includes a suitable photoconductive surface layer **32**.

A light sealed photo detection package **33** is provided with a light source **34** such as a neon lamp, light emitting diode, or other suitable light source that will provide a varying degree of light in accordance with variations in the energy applied thereto. Optically coupled to the light source **34** is a photo detection device **35**, typically of the photoresistive type, which exhibits the characteristic of varying resistance in accordance with the variation of light incident thereon. Other forms of photo detectors could obviously be employed, such as photo transistors or the like. As illustrated herein, the photo detection device exhibits the characteristic of decreasing resistance with increasing incident light. The package **33** is self contained and sealed against the possibility of ambient light entering the package and providing any erroneous effects to the photo detection device. Sealing also provides protection against the possibility of the build up of foreign material which might impede the optical path.

A high voltage source **36** establishes a corona current I_c through the series connection of a resistor **37**, light source **34**

and the electrode **30** to the surface **14** at a position on surface **14** beyond pickoff mechanism **22** in the direction of rotation of the drum. The light source **34** will exhibit a level or intensity of light which is a function of the magnitude of the current flow I_c. In the absence of transfer material at the position between the electrode **30** and the photoconductive surface **32**, the current flow will be relatively continuous, occupying approximately the same level. Should transfer material appear at that position, the resulting condition of the surface will act to impede the flow of current I_c causing a reduction in magnitude of said current. The reduction in magnitude will result in a decline in the light level emitted by the light source **34**.

The photo detector **35** is connected in an electrical series connection with a further resistance **38** and an energizing source of direct current potential **39**. The relationship of the voltage V_{pc} across the photo detector **35** and the current I_c through the light source **34** is illustrated in FIG. **4A**. As shown, an increase in I_c will result in a decrease in V_{pc}, whereas a decrease in I_c will result in an increase in V_{pc}.

Referring to the time wave form diagram in FIG. **4B**, the presence of transfer material causes a discontinuity in the current level I_c which results in an increase of the effective resistance of the photo detector **35** and a corresponding increase in the voltage V_{pc} at the point A in FIG. **3**. Removal or absence of the transfer material results in the photo detector voltage returning to its initial condition. The duration of the resulting pulses **40**, **41** are shown for purposes of illustration only, as it will be evident that the duration will depend upon the length of time that the condition is maintained. It should be noted that the output pulses are electrically isolated from the high voltage source **36** and its associated circuitry.

The voltage pulses **40,41** can be employed as electrical switching signals by any appropriate mechanism such as a control device **42**, which can be a relay or other form of switching device which will respond to the change in voltage level to perform a desired function, such as to energize an alarm, or to disconnect the reproducing mechanism, or the like.

It will be understood that other aspects, variations and modifications of the invention will be apparent to those skilled in the art and that this application is therefore intended to include any such aspects, variations and modifications as may fall within the intent and scope of this application.

What is claimed is:

1. In combination with an electrostatographic reproduction apparatus, including a member adapted to support an electrostatographic surface adapted to have formed thereon a powder image for transfer to a transfer material applied to said surface, pick-off means for removing said transfer material from said surface after transfer of said image thereto, and cleaning means including an electrode for applying an electrostatic charge to said surface;

a device for detecting failure of removal of said transfer material from said surface after transfer of said image to said material, comprising:

energizing means for establishing a first current flow between said electrode and said surface at a position on said surface beyond said pick-off means in the absence of transfer material at said position, and a second current flow in the presence of transfer material at said position; and

detection means coupled to said electrode and responsive to the change between said first and second current flows for providing an indication of said failure of said transfer material to be removed from said surface, said detection means including a first portion for detecting said current change and a second portion for providing an electrical switching signal, said first and second portions electrically isolated from each other, and further including means responsive to said electrical switching signal for providing an indication of said failure condition.

2. The combination of claim **1** wherein said first portion includes a light source connected in series with said differential current means and said electrode and responsive to the current flow therethrough for producing a light level as a function of the magnitude of said current flow.

3. In combination with an electrostatographic reproduction apparatus, including a member adapted to support an electrostatographic surface adapted to have formed thereon a powder image for transfer to a transfer material applied to said surface, pick-off means for removing said transfer material from said surface after transfer of said image thereto, and cleaning means including an electrode for applying an electrostatic charge to said surface;

a device for detecting failure of removal of said transfer material from said surface after transfer of said image to said material, comprising:

energizing means for establishing a first current flow between said electrode and said surface at a position on said surface beyond said pick-off means in the absence of transfer material at said position, and a second current flow in the presence of transfer material at said position; and

detection means coupled to said electrode and responsive to the change between said first and second current flows for providing an indication of said failure of said transfer material to be removed from said surface, said detection means including a first portion for detecting said current change and a second portion for providing an electrical switching signal, said first and second portions electrically isolated from each other, and further including means responsive to said electrical switching signal for providing an indication of said failure condition and wherein said first portion includes a light source connected in series with said energizing means and said electrode and responsive to the current flow therethrough for producing a light level which is a function of the magnitude of said current flow;

said light source being contained within a light sealed package, said package further including a photo detection device, forming a part of said second portion, and optically coupled to said light source.

4. The combination of claim **3** wherein said photo detection device is a photoresistor connected in series with a further resistor and a source of potential, the voltage across said photoresistor providing said electrical switching signal.

* * * * *