AUSTRALIA

PATENTS ACT 1990

PATENT REQUEST : STANDARD PATENT

I/We being the person(s) identified below as the Applicant(s), request the grant of a patent to the person(s) identified below as the Nominated Person(s), for an invention described in the accompanying standard complete specification.

Full application details follow:

[71/70] Applicant(s)/Nominated Person(s):

Hitachi, Ltd. AND Hitachi Video and Information System, Inc.

of

6, Kanda Surugadai, 4-chome, Chiyoda-ku, Tokyo, 101, Japan
292, Yoshida-cho, Totsuka-ku, Yokohama-shi, Kanagawa-ken, 244, Japan
respectively

[54] Invention Title:

Program writable IC card and method thereof

[72] Name(s) of actual inventor(s):

Masayuki INOUE
Shigeyuki ITOH
Yutaka TAKAMI
Kenji MATSUMOTO

[74] Address for service in Australia:

DAVIES COLLISON CAVE, Patent Attorneys, 1 Little Collins Street, Melbourne, Victoria, Australia. Attorney Code: DM

Basic Convention Application(s) Details:

[31] Application Number	[33] Country	Code	[32] Date of Application
8-232408	Japan	JP	3 September 1996

DATED this SECOND day of SEPTEMBER 1997

Keith L Gosling

.....

a member of the firm of DAVIES COLLISON CAVE for and on behalf of the applicant(s)

- 2 SEP 97

AUSTRALIA
PATENTS ACT 1990
NOTICE OF ENTITLEMENT

We, **Hitachi, Ltd.** AND **Hitachi Video and Information System, Inc.**, the applicants/Nominated Persons named in the accompanying Patent Request state the following:–

The Nominated Persons are entitled to the grant of the patent because the Nominated Persons would, on the grant of a patent for the invention to the inventors, be entitled to have the patent assigned to the Nominated Persons.

The Nominated Persons are entitled to claim priority from the basic application listed on the patent request because the Nominated Persons made the basic application.

DATED this SECOND day of SEPTEMBER 1997

.....

a member of the firm of
DAVIES COLLISON CAVE
for and on behalf of the
applicant(s)

(DCC ref: 1924338)

AU9736743

(12) PATENT ABRIDGMENT (11) Document No. AU-B-36743/97
(19) AUSTRALIAN PATENT OFFICE (10) Acceptance No. 695924

(54) Title
PROGRAM WRITABLE IC CARD AND METHOD THEREOF

(51)[6] International Patent Classification(s)
G06K 019/073

(21) Application No. : **36743/97** (22) Application Date : **02.09.97**

(30) Priority Data

(31) Number	(32) Date	(33) Country
8-232408	03.09.96	JP JAPAN

(43) Publication Date : **12.03.98**

(44) Publication Date of Accepted Application : **27.08.98**

(71) Applicant(s)
HITACHI, LTD.; HITACHI VIDEO AND INFORMATION SYSTEM, INC.

(72) Inventor(s)
MASAYUKI INOUE; SHIGEYUKI ITOH; YUTAKA TAKAMI; KENJI MATSUMOTO

(74) Attorney or Agent
DAVIES COLLISON CAVE , 1 Little Collins Street, MELBOURNE VIC 3000

(56) Prior Art Documents
US 5452431
US 5286962
AU 60794/96

(57) Claim

1. A program writable IC card, comprising:

a microprocessor;

a memory for storing a program write control program having at least one of a decryption function and a function for converting formats of a program code, and a program for said microprocessor; and

means in said microprocessor for performing a process of at least one of said decryption and the converting of a program code, to said program for said microprocessor according to said program write control program, and storing the processed program in said memory, when said program for said microprocessor is given from the outside.

AUSTRALIA

PATENTS ACT 1990

COMPLETE SPECIFICATION

NAME OF APPLICANT(S):

Hitachi, Ltd. AND Hitachi Video and Information System, Inc.

ADDRESS FOR SERVICE:

DAVIES COLLISON CAVE
Patent Attorneys
1 Little Collins Street, Melbourne, 3000.

INVENTION TITLE:

Program writable IC card and method thereof

The following statement is a full description of this invention, including the best method of performing it known to me/us:-

BACKGROUND OF THE INVENTION

Field of the Invention

The present invention relates to an IC card having a writable memory and more particularly to an IC card for writing a program in this memory by keeping security and a method thereof.

Description of the Prior Art

An IC card is excellent in security and finds wide applications. Generally, an IC card has a built-in memory for writing and storing a program as well as various information which can be erased electrically and is used to write various information after a user owns it. For example, the invention disclosed in Japanese Laid-Open Patent Application 6-309558 stores customer information in an IC card and provides quick services. In Japanese Laid-Open Patent Application 6-309384, a use that inspection results and dosing data of a patient in a medical institution are stored in an IC card is described. Furthermore, recently, study has been given to use of an IC card in an electronic money system and an IC card is used to write money information.

As mentioned above, the use method of writing

information in an IC card is generally carried out. To keep security, the use method of changing and adding to an internal program stored already and writing a new program is limited.

To improve or change the function of an IC card, there is a case that changing of a program is necessary. Furthermore, to keep security, a case that changing of the cryption method is necessary also may be caused. However, to make it possible to modify an already stored program leads to information opening to public of the microprocessor chip of the IC card and the program thereof and it is not suitable for the use of this IC card for which high security is evaluated.

SUMMARY OF THE INVENTION

According to the present invention, there is provided a program writable IC card, comprising:

a microprocessor;

a memory for storing a program write control program having at least one of a decryption function and a function for converting formats of a program code, and a program for said microprocessor; and

means in said microprocessor for performing a process of at least one of said decryption and the converting of a program code, to said program for said microprocessor according to said program write control program, and storing the processed program in said memory, when said program for said microprocessor is given from the outside.

The invention also provides a program writable IC card, comprising:

a microprocessor;

a memory for storing a program write control program having a decryption function, and a program for said microprocessor; and

means in said microprocessor for performing a process of said decryption, to said program for said microprocessor according to said program write control program, and storing the processed program in said memory, when a crypted program for said microprocessor is given from the outside.

The invention also provides a program writable IC card, comprising:

a microprocessor;

AUSTRALIAN PATENT OFFICE

a memory for storing a program write control program having a function for converting formats of a program code, and a program for said microprocessor; and

means in said microprocessor for performing a process of said process for the converting of a program code, to said program for said microprocessor according to said program write control program, and storing the processed program in said memory, when said program for said microprocessor is given from the outside.

The invention also provides a program writable IC card, comprising:

a first and a second microprocessor;

an external signal input unit;

switching means for switching a signal inputted from said external signal input unit to said first microprocessor or said second microprocessor;

means for controlling said switching means, by a program write control program; and

a memory for storing said program write control program having at least one of a decryption function and a function for converting formats of a program code, and a program for said first microprocessor inputted from said external signal input unit; and

said second microprocessor, comprising;

means in said second microprocessor for performing at least one of the decryption process and the process of converting a program code, to said program for said first microprocessor according to said program write control program, and storing the processed program in said memory, when said program for said first microprocessor is given from the outside.

The invention also provides a program writable IC card, comprising:

a first and a second microprocessor;

an external signal input unit;

switching means for switching a signal inputted from said external signal input unit to said first microprocessor or said second microprocessor;

means for controlling said switching means, by a program write control program; and

a memory for storing said program write control program having a decryption function, and a program for said first microprocessor inputted from said external signal input unit; and

AUSTRALIAN PATENT OFFICE

said second microprocessor, comprising;

means for performing the decryption process, to said program for said first microprocessor according to said program write control program, and storing the processed program in said memory, when a crypted program for said first microprocessor is given from the outside.

The invention also provides a program writable IC card, comprising:

a first and a second microprocessor;

an external signal input unit;

switching means for switching a signal inputted from said external signal input unit to said first microprocessor or said second microprocessor;

means for controlling said switching means, by a program write control program; and

a memory for storing said program write control program having a function for converting a program code, and a program for said first microprocessor inputted from said external signal input unit; and

said second microprocessor, comprising;

means for performing the process for converting a program code, to said program for said first microprocessor according to said program write control program, and storing the processed program in said memory, when said program for said first microprocessor is given from the outside.

The invention also provides a program writable IC card, comprising:

a microprocessor whose information is not opened to public and a microprocessor whose information is opened to public;

an external signal input unit;

a memory for storing a program including at least a write control program, for said microprocessor whose information is not opened to public;

means for accessing said memory for storing a program only from said microprocessor whose information is not opened to public;

switching means for switching a signal inputted from said external signal input unit to said microprocessor whose information is not opened to public or said microprocessor whose information is opened to public;

AUSTRALIAN PATENT OFFICE

means for controlling said switching means, by said write control program; and

a memory controlled by said write control program operated by said microprocessor whose information is not opened to public, for storing a program for said microprocessor whose information is opened to public, when the program is given from the outside.

The invention also provides a program writable IC card, comprising:

a microprocessor whose information is not opened to public and a microprocessor whose information is opened to public;

an external signal input unit;

a memory for storing a program for said microprocessor whose information is not opened to public, and a program including at least a write control program, for said microprocessor whose information is opened to public;

means for accessing said memory for storing a program only from said microprocessor whose information is not opened to public;

switching means for switching a signal inputted from said external signal input unit to said microprocessor wnose information is not opened to public or said microprocessor whose information is opened to public;

means for controlling said switching means, by said write control program; and

a memory controlled by said write control program operated by said microprocessor whose information is opened to public, for storing a program for said microprocessor whose information is opened to public, when the program is given from the outside.

The invention also provides a processing method for a program writable IC card having a microprocessor and a memory for storing a program for said microprocessor, comprising:

a step of performing at least one of a decryption process and a process of converting formats of a program code for said program according to a program write control program, when said program for said microprocessor is given from the outside; and

a step of storing a processing result of at least one of said decryption process and said process of converting a program code, in said memory.

The invention also provides a processing method for a program writable IC card having a microprocessor and a memory for storing a program for said microprocessor,

AUSTRALIAN PATENT OFFICE

comprising:

a step of performing a decryption process for said program according to a program write control program, when a crypted program for said microprocessor is given from the outside; and

a step of storing a processing result of said decryption process, in said memory.

The invention also provides a processing method for a program writable IC card having a microprocessor and a memory for storing a program for said microprocessor, comprising:

a step of performing a process of converting formats of a program code for said program, according to a program code conversion rule for said microprocessor, in a program write control program, when said program for said microprocessor is given from the outside; and

a step of storing a processed result of said process of converting a program code, in said memory.

The invention also provides a processing method for a program writable IC card having a first and a second microprocessor and a memory for storing a program for said first microprocessor, comprising:

a step of switching a signal inputted to said first microprocessor, to said second microprocessor;

a step of performing by said second microprocessor, at least one of a decryption process and a process of converting formats of a program code, for said program, according to a program write control program; and

a step of storing a processed result of at least one of said decryption process and said process of converting formats of a program code, in said memory by said second microprocessor.

The invention also provides a processing method for a program writable IC card having a first and a second microprocessor and a memory for storing a program for said first microprocessor, comprising:

a step of switching a signal inputted to said first microprocessor, to said second microprocessor, when a crypted program is inputted;

a step of performing by said second microprocessor, a decryption process, for said

AUSTRALIAN PATENT OFFICE

program, according to a program write control program; and

a step of storing a processed result of said decryption process, in said memory by said second microprocessor.

The invention also provides a processing method for a program writable IC card having a first and a second microprocessor and a memory for storing a program for said first microprocessor, comprising:

a step of switching a signal inputted to said first microprocessor, to said second microprocessor;

a step of performing by said second microprocessor, a process for converting formats of a program code, for said program, according to a program write control program; and

a step of storing a processed result of said process for converting a program code in said memory, by said second microprocessor.

The invention also provides a processing method for a program writable IC card having a first and a second microprocessor and a memory for storing a program for said first microprocessor, comprising:

a step of storing a program including at least a write control program, for said first microprocessor whose information is not opened to public in a memory;

a step of accessing said memory for storing a program only from said microprocessor whose information is not opened to public;

a step of switching by said write control program, a signal inputted from an external signal input unit to said microprocessor whose information is not opened to public or said microprocessor whose information is opened to public; and

a step controlled by said write control program operated by said microprocessor whose information is not opened to public, for storing a program for said microprocessor whose information is opened to public, when the program is given from the outside.

The invention also provides a processing method for a program writable IC card having a first and a second microprocessor and a memory for storing a program for said first microprocessor, comprising:

a step of storing a program for said first microprocessor whose information is not opened to public, and a program including at least a write control program, for a microprocessor whose information is opened to public in a memory;

AUSTRALIAN PATENT OFFICE

a step of accessing said memory for storing a program only from said microprocessor whose information is not opened to public;

a step of switching by said write control program, a signal inputted from an external signal input unit to said microprocessor whose information is not opened to public or said microprocessor whose information is opened to public; and

a step controlled by said write control program operated by said microprocessor whose information is opened to public, for storing a program for said microprocessor whose information is opened to public, when the program is given from the outside.

Embodiments of the present invention to provide an IC card for changing or adding to an internal program with the high security of an IC card kept and writing a new program and a method thereof.

Embodiments of the invention make it possible to change or add to an internal program by keeping the security necessary for the IC card and to write a new program.

The foregoing and other objects, advantages, manner of operation and novel features of the present invention will be understood from the following detailed description of exemplary forms of the invention when read in connection with the accompanying drawings.

BRIEF DESCRIPTION OF THE DRAWINGS

Fig. 1 is a block diagram showing a first embodiment of the program writable IC card of the present invention.

Fig. 2 is a block diagram showing a second embodiment of the program writable IC card of the present invention.

Fig. 3 is a block diagram showing a third embodiment of the program writable IC card of the present invention.

Fig. 4 is a block diagram showing a fourth embodiment of the program writable IC card of the present invention.

AUSTRALIAN PATENT OFFICE

Fig. 5 is a block diagram showing a fifth embodiment of the program writable IC card of the present invention.

Fig. 6 is a block diagram showing a sixth embodiment of the program writable IC card of the present invention.

DETAILED DESCRIPTION OF THE PREFERRED EMBODIMENTS

Fig. 1 is a block diagram showing a first embodiment of the writable IC card of the present invention. Numeral 1 indicates a microprocessor for IC card, 2 a connector with an external device, 3 a program ROM (1), 3A a program for realizing the IC card function, 3B a write control program having decryption function, 4 a memory for writing, and L1 a data bus.

The microprocessor for IC card 1, the connector 2, and the IC card function program 3A are components for realizing the original function of the IC card. An external instruction is given to the microprocessor 1 via the connector 2 and the IC card performs an operation according to this instruction. A write command for instructing writing is incorporated in the IC card function program 3A beforehand and the IC card function program 3A activates the write control program 3B by an external write instruction. The write

control program 3B is provided with the decryption function beforehand and when the write control program 3B is activated, communication with the IC card requires a crypted command and data, a cryption key, and others. If a program, command, and data to be written later are not crypted correctly, they are rejected by the write control program 3B and the program and data cannot be written into the memory for writing 4. If a program to be written later is crypted, even if it is opened to public, a problem of loss of security will not arise and there is no need to manage the program writing process strictly. Therefore, in addition to keeping of security for a program in the IC card, security can be kept also for a program to be written later.

Fig. 2 is a block diagram showing a second embodiment of the writable IC card of the present invention. Numeral 1 indicates a microprocessor for IC card, 2 a connector with an external device, 3 a program ROM (1), 3A a program for realizing the IC card function, 3C a write control program having program code conversion function, 4 a memory for writing, and L1 a data bus.

The microprocessor1 for IC card, the connector 2, and the IC card function program 3A are components for

AUSTRALIAN PATENT OFFICE

realizing the original function of the IC card and the operations thereof are the same as those of the aforementioned first embodiment. A write command for instructing writing is incorporated in the IC card function program 3A beforehand and the IC card function program 3A activates the write control program 3C by an external write instruction. This write control program 3C has a function for converting a program code and a program to be written later is processed by this write control program 3C, converted in a different format from that of a code inputted from the connector 2, and then written into the memory for writing 4. This program to be written later is produced at a site where the security thereof is managed and the program code thereof is converted beforehand according to a rule which is reverse to the program code conversion rule in the write control program 3C. By doing this, in the same way as with the first embodiment, in addition to keeping of security for a program in the IC card, security can be kept also for a program to be written later.

If the function of a prior art for converting a program code for microprocessor to a program code for microprocessor in an IC card which is not open to public is provided as a program code conversion

AUSTRALIAN PATENT OFFICE

function of the write control program 3C, there is no need to open the information on the microprocessor 1 in the IC card to public for a program developer. Namely, from an advantage that a program code to be given from the outside may be a known code and there is no need to open an instruction code of a program in the IC card to the outside, the security of the IC card can be kept and furthermore the program development efficiency can be improved. In this case, from a viewpoint of keeping of security, adding of a function for eliminating fetching of information on the IC card function program 3A by a program to be written later is effective.

If the write control program 3C has both the two functions explained in the first and second embodiments, that is, the decryption function and the program code conversion function, it is more effective in the respect of security keeping of the IC card.

Fig. 3 is a block diagram showing a third embodiment of the writable IC card of the present invention. Numeral 1 indicates a microprocessor for IC card, 2 a connector with an external device, 3 a program ROM (1), 3A a program for realizing the IC card function, 4 a memory for writing, 5 a microprocessor for writing, 6 a program ROM (2), 6A a

write control program having decryption function, 7 a switch, L1 a data bus, L2 a switching signal (1), and L3 a switching signal (2). The switch 7 is a means for selectively switching the microprocessors 1 and 5 connected to the connector 2 and switches them by the switching signals L2 and L3. When the switch 7 selects the microprocessor 1, the microprocessor 1, the connector 2, and the program ROM (1) 3 realize the original IC card function.

A write command for instructing writing is incorporated in the IC card function program 3A beforehand, and the switching signal (1) L2 is outputted from the IC card for microprocessor 1 by a write instruction from the outside, and the switch 7 is switched to the microprocessor for writing 5. The write control program 6A is provided with the decryption function. The write control program 6A executes the decryption function by the microprocessor for writing 5. Communication with the IC card after the switch 7 is switched to the microprocessor for writing 5 requires a crypted program, command, and data, a cryption key, and others. If a program, command, and data to be written later are not crypted correctly, they are rejected by the write control program 6A and the program and data cannot be written

into the memory for writing 4. Therefore, in addition to keeping of security for a program in the IC card, security can be kept also for a program to be written later. When the IC card is structured like this, even if it can be switched to the write mode by an incorrect operation, if the process ends normally and the switch 7 cannot be returned to the microprocessor 1 for IC card by the switching signal L3, the use as an ordinary IC card can be made impossible forever and the security can be kept. This is an advantage which is not found in the first and second embodiments. Even in a constitution that one microprocessor is used, if it is used incorrectly, by adding a circuit receiving no external reset signal, the same effect can be obtained. Since the two microprocessors 1 and 5 are independent of each other, a microprocessor in a quite different format can be used and a constitution with higher security can be obtained.

Fig. 4 is a block diagram showing a fourth embodiment of the writable IC card of the present invention. Numeral 1 indicates a microprocessor for IC card, 2 a connector with an external device, 3 a program ROM (1), 3A a program for realizing the IC card function, 4 a memory for writing, 5 a microprocessor for writing, 6 a program ROM (2), 6B a

AUSTRALIAN PATENT OFFICE

P:\OPER\KAT\36743-97.191 15/7/98

write control program having program code conversion function, 7 a switch, L1 a data bus, L2 a switching signal (1), and L3 a switching signal (2). The functional operation of this embodiment as an IC card and the switching operation for the two microprocessors are the same as those of the third embodiment mentioned above. This embodiment has both the functions of the second and third embodiments mentioned above.

If the write control program 6B is provided with both of the two functions explained in the third and fourth embodiments, that is, the decryption function and the program code conversion function, it is more effective in the respect of keeping of security of the IC card.

Fig. 5 is a block diagram showing a fifth embodiment of the writable IC card of the present invention. This embodiment shows a program writable IC card for keeping the internal security of the IC card by perfectly opening a program to be written later to the user side. Numeral 1 indicates a microprocessor for IC card, technical information such as a specification of the microprocessor 1 may not be opened to public. Numeral 2 indicates a connector with an external device, 3 a program ROM (1), 3A a program for realizing the IC card function, 3D a program for write control, 4 a memory for writing, 7 a switch, 8 a microprocessor

AUSTRALIAN PATENT OFFICE

whose information is opened to public, L1 a data bus, L2 a switching signal (1), L3 a switching signal (2), and L4 a chip select signal. A program to be written into the memory for writing 4 is structured so as to be executed only by the microprocessor 8 whose information is opened to public. The chip select signal L4 for the program ROM (1) 3 storing the IC card function program 3A is structured so as to be controlled only by the microprocessor 1 for IC card. Therefore, it is impossible to access the program ROM (1) 3 by a program to be written later and the security of the IC card function can be kept.

The program writing operation for the memory for writing 4 is started when the microprocessor 1 for IC card activates the program for write control 3D by an external write instruction. The program for write control 3D performs a process of writing an external program and data into the memory for writing 4. The program in this case is created for the microprocessor 8 whose information is already opened to public and the security of the IC card function is kept inside the IC card, so that there is no need to protect a program to be written later.

This embodiment is a one which is suited to a use for making openly handling a program to be written

AUSTRALIAN PATENT OFFICE

later and keeping the security as an IC card compatible with each other.

Fig. 6 is a block diagram showing a sixth embodiment of the writable IC card of the present invention. Numeral 1 indicates a microprocessor for IC card, 2 a connector with an external device, 3 a program ROM (1), 3A a program for realizing the IC card function, 4 a memory for writing, 7 a switch, 8 a microprocessor whose information is opened to public, 6 a program ROM (2), 6C a write control program for the microprocessor 8, L1 a data bus, L2 a switching signal (1), L3 a switching signal (2), and L4 a chip select signal. The respect of keeping the security of the IC card function by the chip select signal L4 is the same as that of the fifth embodiment. Namely, the program writing operation for the memory for writing 4 is started when the microprocessor for IC card actuates the write control program 6C by an external write instruction.

According to this embodiment, the program ROM (2) 6 storing the write control program 6C for the microprocessor 8 whose information is opened to public is independent of the program ROM (1) 3 storing the IC card function program 3A, so that keeping of the security of the IC card function can be enhanced more.

When a program is to be written later, the microprocessor 1 for IC card passes the control process to the microprocessor 8 whose information is opened to public by the switching signal L2. The microprocessor 8 whose information is opened to public performs all the write control process according to the write control program 6C and returns the control process to the microprocessor 1 for IC card by the switching signal L3 when the write process ends.

According to the fifth and sixth embodiments, the development efficiency can be improved by use of a microprocessor whose information is opened to public under a catalog specification or operation specification. However, by combining the function for controlling writing like the other embodiments, the security for a program to be written later can be kept.

The memory 4 for writing program has no independent constitution and can serve as a memory for program of a microprocessor if it is writable.

In each aforementioned embodiment, a memory which can write only once can be used for the aforementioned memory for writing.

Effects of the Invention

AUSTRALIAN PATENT OFFICE

As mentioned above, according to embodiments of the present invention, an IC card which keeps the security of the IC card function high and can write a program later can be obtained.

Throughout this specification and the claims which follow, unless the context requires otherwise, the word "comprise", and variations such as "comprises" and "comprising", will be understood to imply the inclusion of a stated integer or step or group of integers or steps but not the exclusion of any other integer or step or group of integers or steps.

AUSTRALIAN PATENT OFFICE

THE CLAIMS DEFINING THE INVENTION ARE AS FOLLOWS:-

1. A program writable IC card, comprising:

a microprocessor;

a memory for storing a program write control program having at least one of a decryption function and a function for converting formats of a program code, and a program for said microprocessor; and

means in said microprocessor for performing a process of at least one of said decryption and the converting of a program code, to said program for said microprocessor according to said program write control program, and storing the processed program in said memory, when said program for said microprocessor is given from the outside.

2. A program writable IC card, comprising:

a microprocessor;

a memory for storing a program write control program having a decryption function, and a program for said microprocessor; and

means in said microprocessor for performing a process of said decryption, to said program for said microprocessor according to said program write control program, and storing the processed program in said memory, when a crypted program for said microprocessor is given from the outside.

3. A program writable IC card, comprising:

a microprocessor;

a memory for storing a program write control program having a function for converting formats of a program code, and a program for said microprocessor; and

means in said microprocessor for performing a process of said process for the converting of a program code, to said program for said microprocessor according to said program write control program, and storing the processed program in said memory, when said program for said microprocessor is given from the outside.

4. A program writable IC card according to Claim 2, wherein said program write control program, further comprising:

a function for converting a program code; and

AUSTRALIAN PATENT OFFICE

said microprocessor further comprising:

means for performing the decryption process and the process of converting a program code according to said program write control program, and storing the processed program in said memory, when said crypted program for said microprocessor is given from the outside.

5. A program writable IC card, comprising:

a first and a second microprocessor;

an external signal input unit;

switching means for switching a signal inputted from said external signal input unit to said first microprocessor or said second microprocessor;

means for controlling said switching means, by a program write control program; and

a memory for storing said program write control program having at least one of a decryption function and a function for converting formats of a program code, and a program for said first microprocessor inputted from said external signal input unit; and

said second microprocessor, comprising;

means in said second microprocessor for performing at least one of the decryption process and the process of converting a program code, to said program for said first microprocessor according to said program write control program, and storing the processed program in said memory, when said program for said first microprocessor is given from the outside.

6. A program writable IC card, comprising:

a first and a second microprocessor;

an external signal input unit;

switching means for switching a signal inputted from said external signal input unit to said first microprocessor or said second microprocessor;

means for controlling said switching means, by a program write control program; and

a memory for storing said program write control program having a decryption function, and a program for said first microprocessor inputted from said external signal input unit; and

said second microprocessor, comprising;

means for performing the decryption process, to said program for said first

AUSTRALIAN PATENT OFFICE

microproce according to said program write control program, and storing the processed program in said memory, when a crypted program for said first microprocessor is given from the outside.

7. A program writable IC card, comprising:

a first and a second microprocessor;

an external signal input unit;

switching means for switching a signal inputted from said external signal input unit to said first microprocessor or said second microprocessor;

means for controlling said switching means, by a program write control program; and

a memory for storing said program write control program having a function for converting a program code, and a program for said first microprocessor inputted from said external signal input unit; and

said second microprocessor, comprising;

means for performing the process for converting a program code, to said program for said first microprocessor according to said program write control program, and storing the processed program in said memory, when said program for said first microprocessor is given from the outside.

8. A program writable IC card according to Claim 6, wherein said program write control program, further comprising:

a function for converting a program code; and

said second microprocessor further comprising:

means for performing a process of converting a program code according to said program write control program and storing the processed program in said memory, when said crypted program for said first microprocessor is given from the outside.

9. A program writable IC card, comprising:

a microprocessor whose information is not opened to public and a microprocessor whose information is opened to public;

an external signal input unit;

a memory for storing a program including at least a write control program, for said microprocessor whose information is not opened to public;

AUSTRALIAN PATENT OFFICE

means for accessing said memory for storing a program only from said microprocessor whose information is not opened to public;

switching means for switching a signal inputted from said external signal input unit to said microprocessor whose information is not opened to public or said microprocessor whose information is opened to public;

means for controlling said switching means, by said write control program; and

a memory controlled by said write control program operated by said microprocessor whose information is not opened to public, for storing a program for said microprocessor whose information is opened to public, when the program is given from the outside.

10. A program writable IC card, comprising:

a microprocessor whose information is not opened to public and a microprocessor whose information is opened to public;

an external signal input unit;

a memory for storing a program for said microprocessor whose information is not opened to public, and a program including at least a write control program, for said microprocessor whose information is opened to public;

means for accessing said memory for storing a program only from said microprocessor whose information is not opened to public;

switching means for switching a signal inputted from said external signal input unit to said microprocessor whose information is not opened to public or said microprocessor whose information is opened to public;

means for controlling said switching means, by said write control program; and

a memory controlled by said write control program operated by said microprocessor whose information is opened to public, for storing a program for said microprocessor whose information is opened to public, when the program is given from the outside.

11. A program writable IC card according to one of Claims 1 to 10, wherein said memory for storing a program for said microprocessor is a memory which can write only once.

12. A processing method for a program writable IC card having a microprocessor and a memory for storing a program for said microprocessor, comprising:

AUSTRALIAN PATENT OFFICE

a step of performing at least one of a decryption process and a process of converting formats of a program code for said program according to a program write control program, when said program for said microprocessor is given from the outside; and

a step of storing a processing result of at least one of said decryption process and said process of converting a program code, in said memory.

13. A processing method for a program writable IC card having a microprocessor and a memory for storing a program for said microprocessor, comprising:

a step of performing a decryption process for said program according to a program write control program, when a crypted program for said microprocessor is given from the outside; and

a step of storing a processing result of said decryption process, in said memory.

14. A processing method for a program writable IC card having a microprocessor and a memory for storing a program for said microprocessor, comprising:

a step of performing a process of converting formats of a program code for said program, according to a program code conversion rule for said microprocessor, in a program write control program, when said program for said microprocessor is given from the outside; and

a step of storing a processed result of said process of converting a program code, in said memory.

15. A processing method for a program writable IC card having a first and a second microprocessor and a memory for storing a program for said first microprocessor, comprising:

a step of switching a signal inputted to said first microprocessor, to said second microprocessor;

a step of performing by said second microprocessor, at least one of a decryption process and a process of converting formats of a program code, for said program, according to a program write control program; and

a step of storing a processed result of at least one of said decryption process and said process of converting formats of a program code, in said memory by said second microprocessor.

AUSTRALIAN PATENT OFFICE

P/00/011 Regulation 3.2

16. A processing method for a program writable IC card having a first and a second microprocessor and a memory for storing a program for said first microprocessor, comprising:

a step of switching a signal inputted to said first microprocessor, to said second microprocessor, when a crypted program is inputted;

a step of performing by said second microprocessor, a decryption process, for said program, according to a program write control program; and

a step of storing a processed result of said decryption process, in said memory by said second microprocessor.

17. A processing method for a program writable IC card having a first and a second microprocessor and a memory for storing a program for said first microprocessor, comprising:

a step of switching a signal inputted to said first microprocessor, to said second microprocessor;

a step of performing by said second microprocessor, a process for converting formats of a program code, for said program, according to a program write control program; and

a step of storing a processed result of said process for converting a program code in said memory, by said second microprocessor.

18. A processing method for a program writable IC card having a first and a second microprocessor and a memory for storing a program for said first microprocessor, comprising:

a step of storing a program including at least a write control program, for said first microprocessor whose information is not opened to public in a memory;

a step of accessing said memory for storing a program only from said microprocessor whose information is not opened to public;

a step of switching by said write control program, a signal inputted from an external signal input unit to said microprocessor whose information is not opened to public or said microprocessor whose information is opened to public; and

a step controlled by said write control program operated by said microprocessor whose information is not opened to public, for storing a program for said microprocessor whose

AUSTRALIAN PATENT OFFICE

information is opened to public, when the program is given from the outside.

19. A processing method for a program writable IC card having a first and a second microprocessor and a memory for storing a program for said first microprocessor, comprising:

a step of storing a program for said first microprocessor whose information is not opened to public, and a program including at least a write control program, for a microprocessor whose information is opened to public in a memory;

a step of accessing said memory for storing a program only from said microprocessor whose information is not opened to public;

a step of switching by said write control program, a signal inputted from an external signal input unit to said microprocessor whose information is not opened to public or said microprocessor whose information is opened to public; and

a step controlled by said write control program operated by said microprocessor whose information is opened to public, for storing a program for said microprocessor whose information is opened to public, when the program is given from the outside.

20. A program writable IC card substantially as hereinbefore described with reference to the drawings and/or Examples.

21. A processing method of program writable IC card substantially as hereinbefore described with reference to the drawings and/or Examples.

DATED this 15th day of July, 1998

HITACHI, LTD. and HITACHI VIDEO AND INFORMATION SYSTEM, INC.

By their Patent Attorneys

Davies Collison Cave

AUSTRALIAN PATENT OFFICE

ABSTRACT OF THE DISCLOSURE

An IC card and a method thereof for adding or changing a program for a memory for writing without adversely affecting the function of the IC card and by keeping the security of a program to be written later by restricting writing by a write control program having a decryption function or a program code conversion function

10 798 3743

FIG. 1

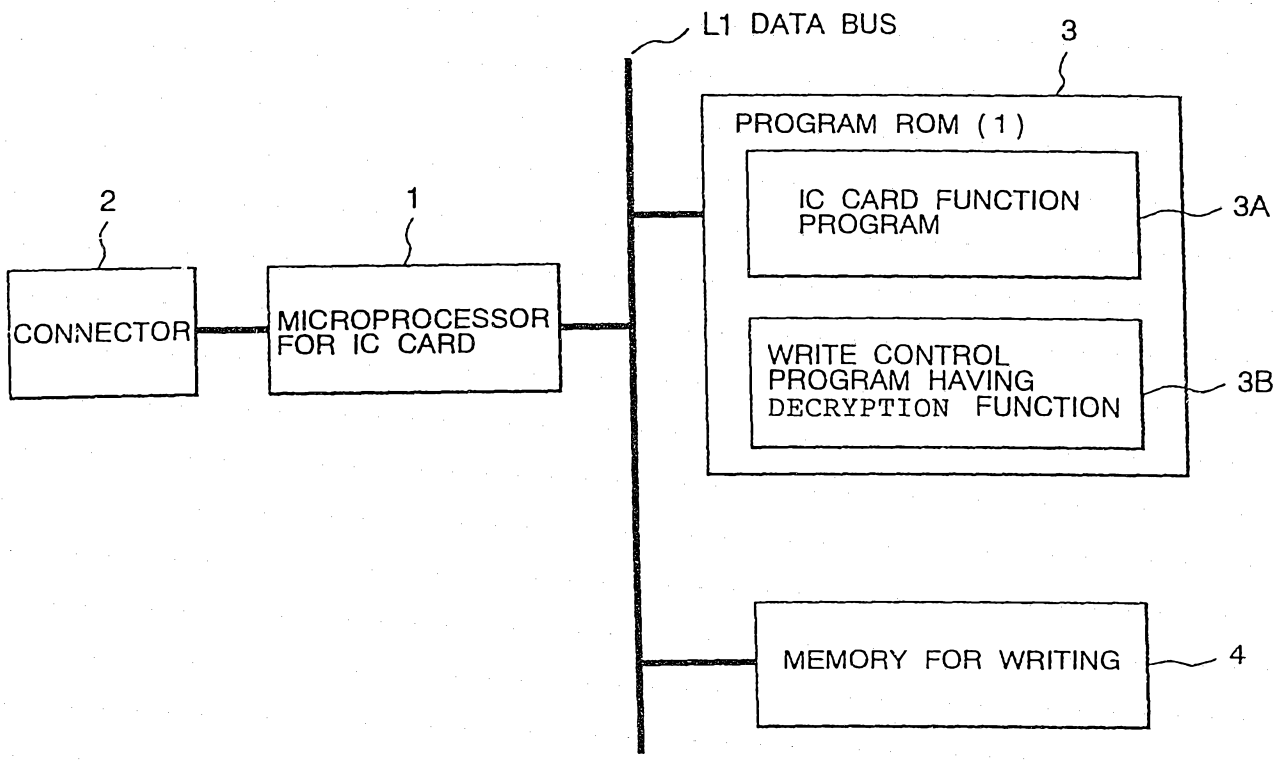

36 743/97

FIG. 2

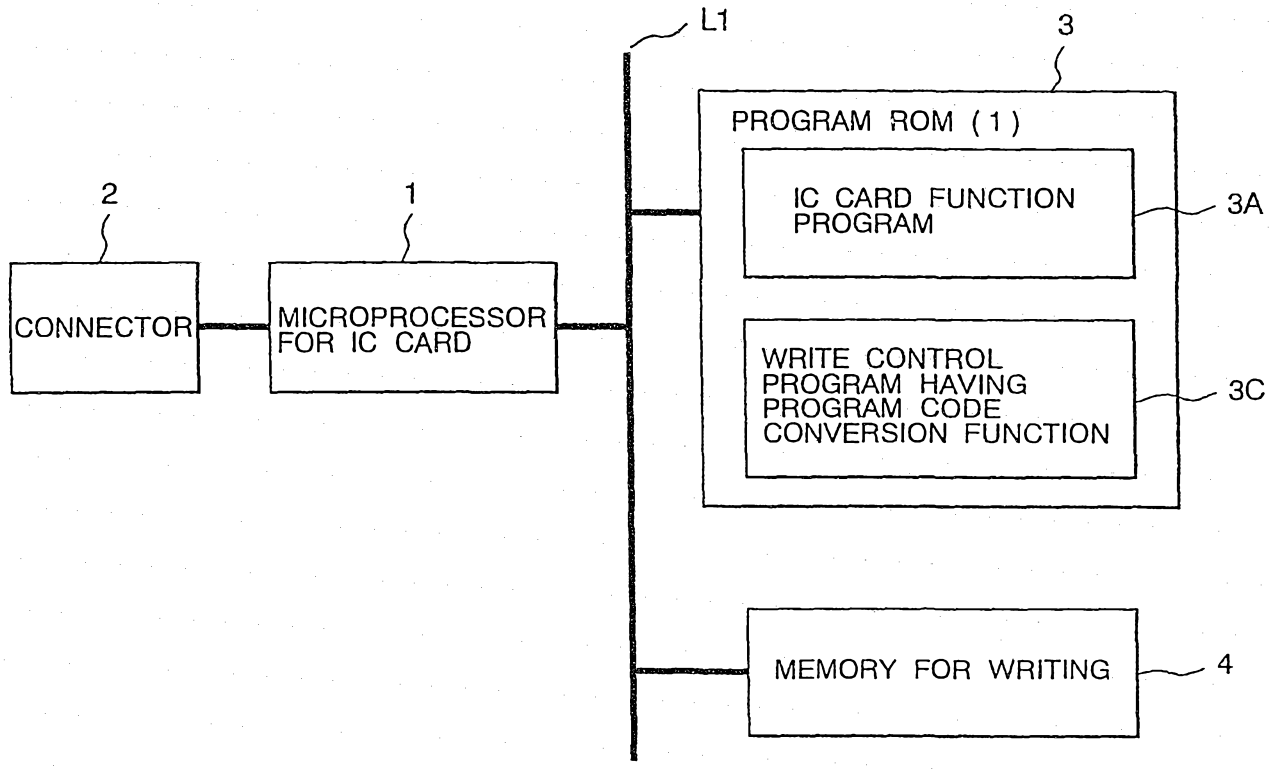
L1
3
PROGRAM ROM (1)
IC CARD FUNCTION PROGRAM
3A
WRITE CONTROL PROGRAM HAVING PROGRAM CODE CONVERSION FUNCTION
3C
2
CONNECTOR
1
MICROPROCESSOR FOR IC CARD
MEMORY FOR WRITING
4

FIG. 3

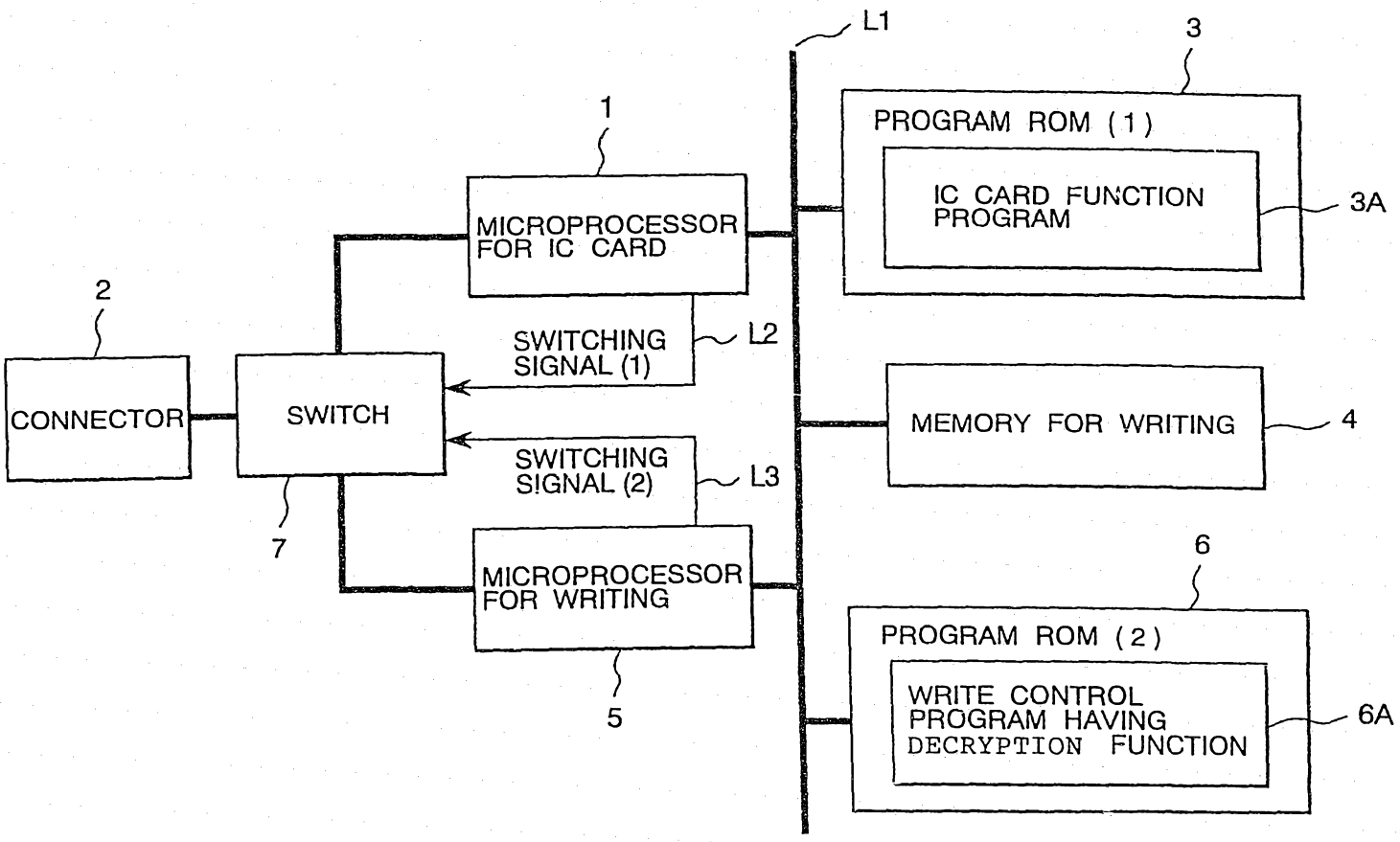
L1
3
PROGRAM ROM (1)
IC CARD FUNCTION PROGRAM
3A
1
MICROPROCESSOR FOR IC CARD
2
SWITCHING SIGNAL (1)
L2
CONNECTOR
SWITCH
MEMORY FOR WRITING
4
SWITCHING SIGNAL (2)
L3
7
MICROPROCESSOR FOR WRITING
6
PROGRAM ROM (2)
WRITE CONTROL PROGRAM HAVING DECRYPTION FUNCTION
6A
5

FIG. 4

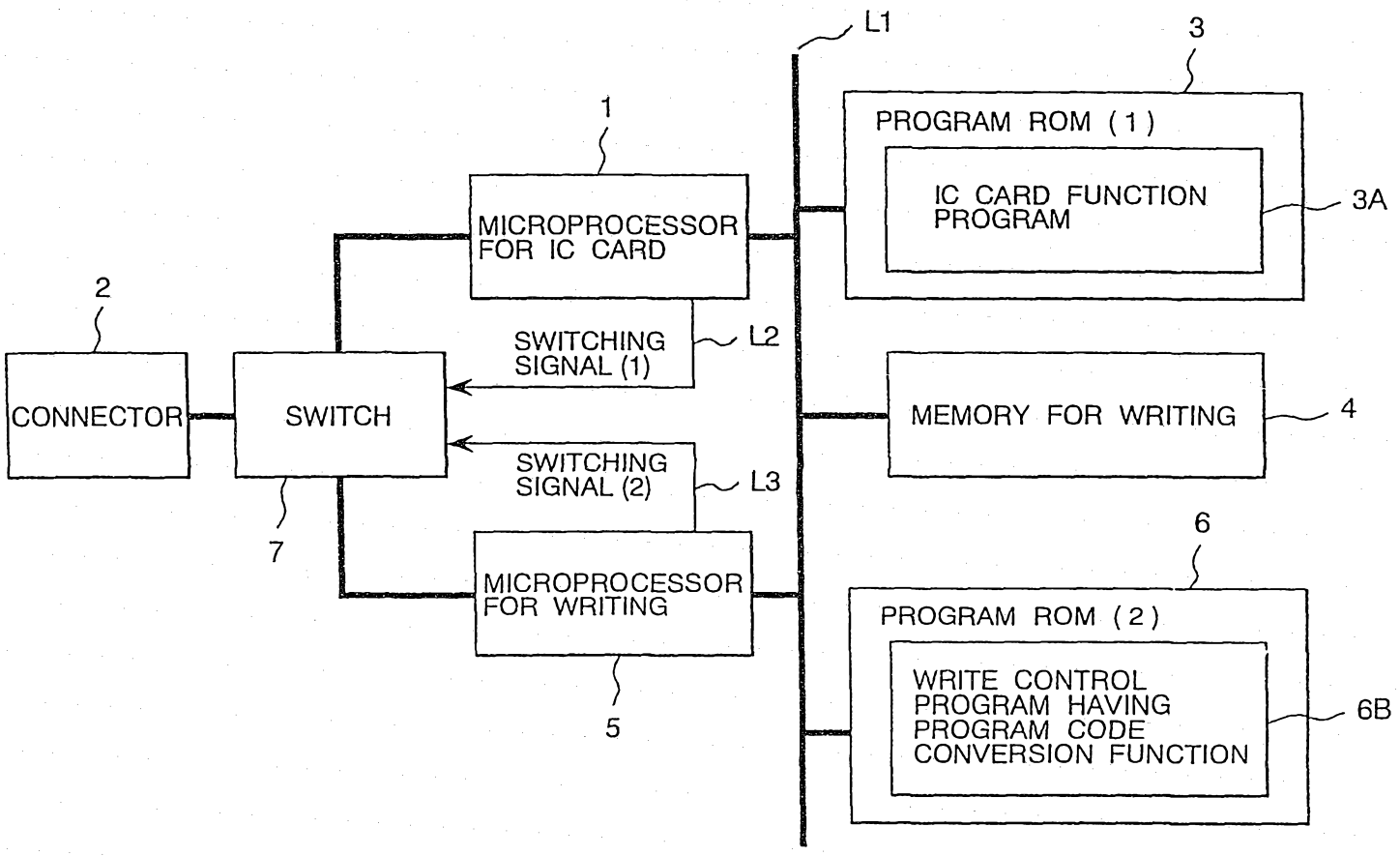
L1
3
PROGRAM ROM (1)
IC CARD FUNCTION PROGRAM
3A
1
MICROPROCESSOR FOR IC CARD
2
SWITCHING SIGNAL (1)
L2
CONNECTOR
SWITCH
MEMORY FOR WRITING
4
SWITCHING SIGNAL (2)
L3
7
6
MICROPROCESSOR FOR WRITING
PROGRAM ROM (2)
WRITE CONTROL PROGRAM HAVING PROGRAM CODE CONVERSION FUNCTION
6B
5

FIG. 5

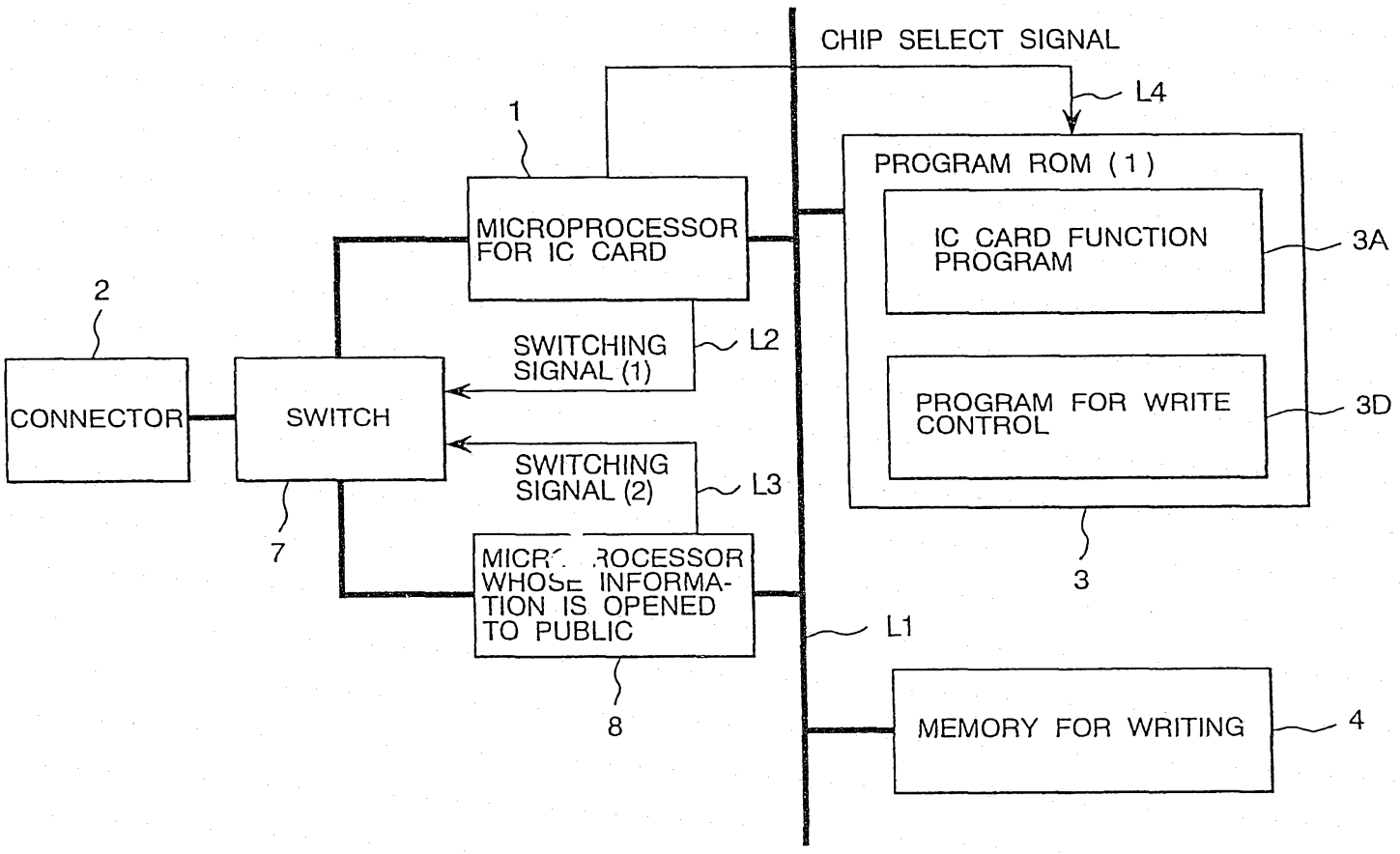
CHIP SELECT SIGNAL
L4
1
MICROPROCESSOR FOR IC CARD
PROGRAM ROM (1)
IC CARD FUNCTION PROGRAM
3A
2
SWITCHING SIGNAL (1)
L2
CONNECTOR
SWITCH
PROGRAM FOR WRITE CONTROL
3D
SWITCHING SIGNAL (2)
L3
7
MICROPROCESSOR WHOSE INFORMATION IS OPENED TO PUBLIC
3
L1
8
MEMORY FOR WRITING
4

FIG. 6

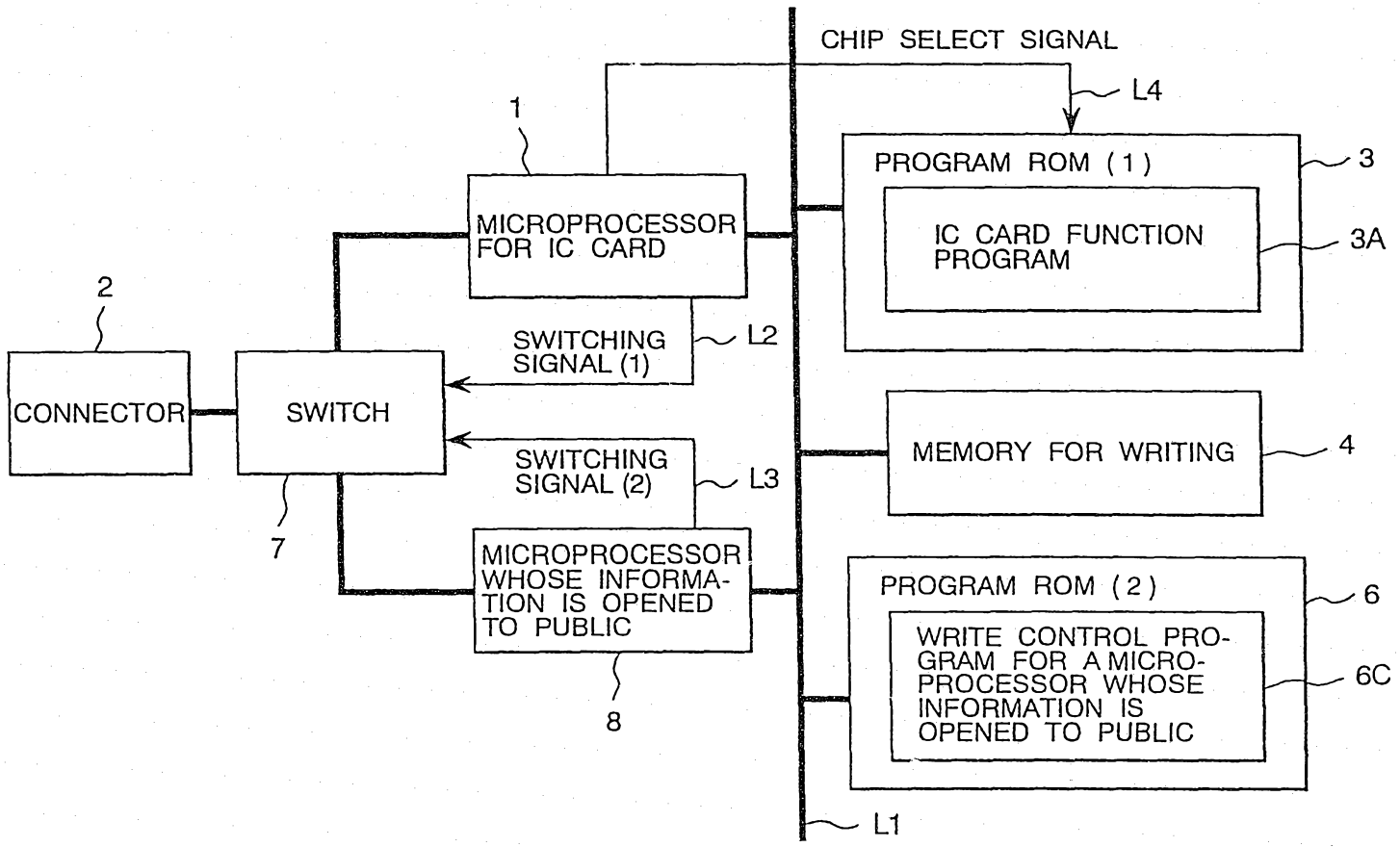
CHIP SELECT SIGNAL
L4
1
PROGRAM ROM (1)
3
MICROPROCESSOR FOR IC CARD
IC CARD FUNCTION PROGRAM
3A
2
SWITCHING SIGNAL (1)
L2
CONNECTOR
SWITCH
SWITCHING SIGNAL (2)
L3
MEMORY FOR WRITING
4
7
MICROPROCESSOR WHOSE INFORMATION IS OPENED TO PUBLIC
PROGRAM ROM (2)
6
WRITE CONTROL PROGRAM FOR A MICROPROCESSOR WHOSE INFORMATION IS OPENED TO PUBLIC
6C
8
L1