PCT

WORLD INTELLECTUAL PROPERTY ORGANIZATION
International Bureau

INTERNATIONAL APPLICATION PUBLISHED UNDER THE PATENT COOPERATION TREATY (PCT)

(51) International Patent Classification 6 : A01J 5/017, A01K 1/12

A1

(11) International Publication Number: WO 96/01041

(43) International Publication Date: 18 January 1996 (18.01.96)

(21) International Application Number: PCT/NL95/00231

(22) International Filing Date: 29 June 1995 (29.06.95)

(30) Priority Data:
9401114 4 July 1994 (04.07.94) NL

(71) Applicant *(for all designated States except US)*: MAASLAND N.V. [NL/NL]; Weverskade 10, NL-3155 PD Maasland (NL).

(72) Inventor; and
(75) Inventor/Applicant *(for US only)*: VAN DER LELY, Cornelis [NL/CH]; Brüschenrain 7, CH-6300 Zug (CH).

(74) Agent: MULDER, Herman; Weverskade 10, NL-3155 PD Maasland (NL).

(81) Designated States: CA, JP, NZ, US, European patent (AT, BE, CH, DE, DK, ES, FR, GB, GR, IE, IT, LU, MC, NL, PT, SE).

Published
With international search report.

(54) Title: A CONSTRUCTION INCLUDING AN IMPLEMENT FOR AUTOMATICALLY MILKING ANIMALS

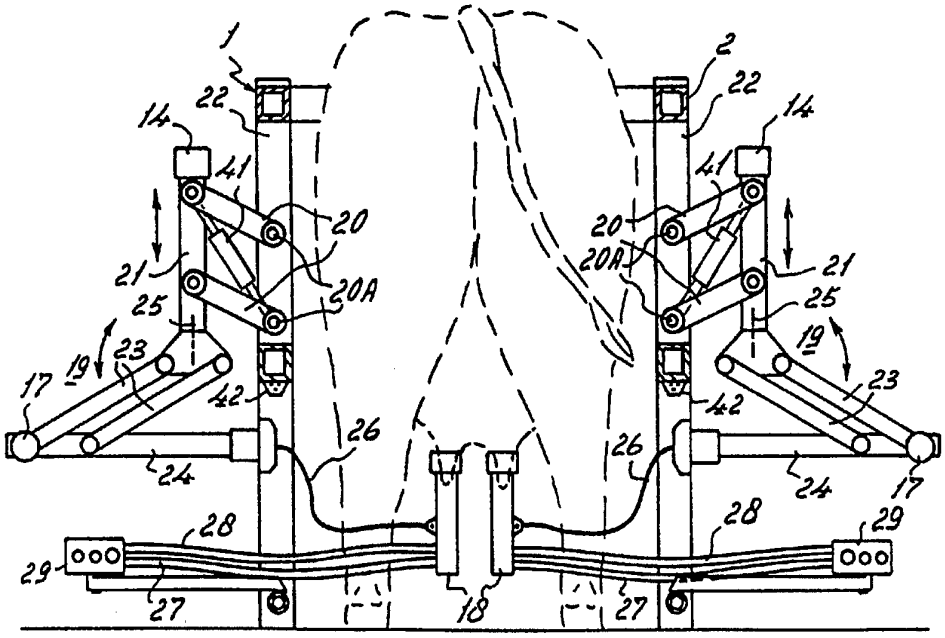

(57) Abstract

In a construction including an implement for automatically milking animals, such as cows, there are present one or more milking boxes (1) having one or more milking robots for automatically coupling teat cups (18) to the teats of the animals. During milking, milk tubes (27) connected to the teat cups (18) are freely movable in such a manner over or at a slight height above the floor of a milking box (1) that the teat cups (18) can follow movements of the animal with a slight resistance.

FOR THE PURPOSES OF INFORMATION ONLY

Codes used to identify States party to the PCT on the front pages of pamphlets publishing international applications under the PCT.

AT	Austria	**GB**	United Kingdom	**MR**	Mauritania
AU	Australia	**GE**	Georgia	**MW**	Malawi
BB	Barbados	**GN**	Guinea	**NE**	Niger
BE	Belgium	**GR**	Greece	**NL**	Netherlands
BF	Burkina Faso	**HU**	Hungary	**NO**	Norway
BG	Bulgaria	**IE**	Ireland	**NZ**	New Zealand
BJ	Benin	**IT**	Italy	**PL**	Poland
BR	Brazil	**JP**	Japan	**PT**	Portugal
BY	Belarus	**KE**	Kenya	**RO**	Romania
CA	Canada	**KG**	Kyrgystan	**RU**	Russian Federation
CF	Central African Republic	**KP**	Democratic People's Republic of Korea	**SD**	Sudan
CG	Congo			**SE**	Sweden
CH	Switzerland	**KR**	Republic of Korea	**SI**	Slovenia
CI	Côte d'Ivoire	**KZ**	Kazakhstan	**SK**	Slovakia
CM	Cameroon	**LI**	Liechtenstein	**SN**	Senegal
CN	China	**LK**	Sri Lanka	**TD**	Chad
CS	Czechoslovakia	**LU**	Luxembourg	**TG**	Togo
CZ	Czech Republic	**LV**	Latvia	**TJ**	Tajikistan
DE	Germany	**MC**	Monaco	**TT**	Trinidad and Tobago
DK	Denmark	**MD**	Republic of Moldova	**UA**	Ukraine
ES	Spain	**MG**	Madagascar	**US**	United States of America
FI	Finland	**ML**	Mali	**UZ**	Uzbekistan
FR	France	**MN**	Mongolia	**VN**	Viet Nam
GA	Gabon				

A CONSTRUCTION INCLUDING AN IMPLEMENT FOR AUTOMATICALLY MILKING ANIMALS

The present invention relates to a construction including an implement for automatically milking animals, such as cows, having one or more milking boxes and one or more milking robots for automatically coupling teat cups to the teats of the animals. So as to prevent that an animal present in a milking box is troubled during milking by the milking equipment and to achieve that the animal can move about more freely in the milking box, the construction is characterized according to the invention, in that during milking a milk tube connected to a teat cup is freely movable in such a manner that the teat cup can follow the animal's movements with a slight resistance. The milk tube is then preferably of such a design that during milking it is movable with a slight resistance along or at a slight height above the floor of a milking box. The invention, therefore, also relates to a construction including an implement for automatically milking animals, such as cows, having one or more milking boxes and one or more milking robots for automatically coupling teat cups to the teats of the animals, the construction then being characterized in that a milk tube connected to a teat cup is of such a design that during milking it is movable with a slight resistance along or at a slight height above the floor of a milking box. More in particular, a milk tube can extend during milking freely movably under a robot arm which is part of the milking robot. If the milk tube is not secured to the robot arm, the tube will be capable of moving more freely. During milking the

milk tube can extend in a mainly horizontal plane and be movable in this plane. In this situation, the milk tube may in many cases be, seen in a plan view, in the shape of a loop, more specifically in the shape of a U. More in particular, a milk tube can extend, during milking, from the teat cup to which the milk tube is connected, taken in a plan view, obliquely forwardly in the direction of walk of the animal and outwardly and from there may extend in the shape of a loop. The invention, therefore, also relates to a construction including an implement for automatically milking animals, such as cows, having one or more milking boxes and one or more milking robots for automatically coupling teat cups to the teats of the animals, the construction then being characterized in that, during milking, a milk tube extends from the teat cup to which the milk tube is connected, taken in a plan view, obliquely forwardly in the direction of walk of the animal and outwardly and from there extends in the shape of a loop. The milk tubes connected to the several teat cups can extend from the teat cups at both sides of a milking box to as far as aside of the milking box. More in particular, a milk tube may extend in the shape of a loop to a point of connection of a milk line, disposed at the side of a milking box.

In accordance with a further feature of the invention, the construction is characterized in that a milking robot includes at least one omnilaterally movable robot arm, which acts as a carrier for one of the teat cups, whilst the robot arm, after a teat cup has been fitted to a teat of an animal, can be moved to outside the reach of an animal present in a relevant milking box. The teat cups remain in connection with the respective robot arms by means of a flexible connecting element, such as a cord. When a teat cup is to be uncoupled, then the relevant robot arm is moved towards the teat on which the teat cup has been fitted, whilst simultaneously or shortly thereafter the teat cup is pulled up against the robot arm and the robot arm is thereafter moved, at least mainly, to outside the milking box. In a preferred embodiment, each robot arm acts as a carrier for only one teat cup, so that consequently four of

these robot arms are present in the milking robot. On the other hand, a robot arm may also act as a carrier for two teat cups, in which case two robot arms are present in the milking robot; these robot arms can then be disposed, for example, on both sides of the relevant milking box. Expressed in a more general way, a milking robot can include at least two robot arms, which are movable independently of each other and act as a carrier for one or more teat cups, which robot arms are arranged on both sides of or near a milking box and wherein, in a specific embodiment, the robot arms are provided with adjusting means disposed one above the other, which, in a spatial view, results in an advantageous disposition. The adjusting means may include a four-bar linkage, with the aid of which a robot arm is movable in the upward direction. In addition, the adjusting means may include a further four-bar linkage, with the aid of which a teat cup is movable from the side of a milking box to under the udder of an animal standing therein. This further four-bar linkage is preferably connected to the said first four-bar linkage in such a manner that it is rotating around a mainly vertical shaft. The two four-bar linkages and the pivotability about the said vertical shaft, provides an omnidirectional motional capability of the robot arm and consequently also of the teat cup or teat cups connected thereto. A robot arm may accommodate an adjusting cylinder, more in particular a pneumatic cylinder, with the aid of which, through the intermediary of the aforesaid flexible element, a teat cup can be pulled up against the robot arm and optionally can be maintained in that position.

To determine the position of the teats of the animal, a detector, more in particular a laser detector, will be present, which detector will preferably be disposed on a separate robot arm construction. Thereby the detector can always be moved to such a position under the animal that the teats, whatever their position and how closely they may be located relative to each other, can always be detected. The detection of the position of the teats can be further facilitated if the detector can be moved from a rest position at or near the side of a milking box to a first and a second

working position, whilst in one of these working positions the position of a teat of an animal standing in the milking box can be determined. More in particular, it is possible in the first working position to determine the positions of two teats, e.g. the front pair and in the second working position the positions of the other two teats, e.g. the rear pair.

When no animal is being milked, then the teat cups will be in the rest position at or near a side or at or near the sides of a milking box. In an advantageous embodiment in accordance with the invention, the teat cups are automatically cleaned precisely in this rest position. For that purpose, spray heads connected to a washing circuit may have been disposed at or near both sides of a milking box, to which the teat cups are connectable independently of each other. When four robot arms are used, each of which acts as a carrier of one teat cup, and when these robot arms are arranged two by two on either side of a milking box, then the spray heads will have been disposed two by two at or near both sides of the milking box. These specific locations are such that in their rest position, in which they are pulled up against a corresponding robot arm, the teat cups are in connection with the spray heads.

The invention further relates to a method of milking animals, such as cows, in a milking box and with the aid of a milking robot having teat cups which are automatically couplable to the teats of an animal, and wherein, when the teat cups are in the coupled state, the robot arm or robot arms of the milking robot are moved predominantly to outside the milking box, whilst the teat cups remain in connection with the robot arm or robot arms with the aid of a flexible element, such as a cord, and wherein, when a teat cup is to be uncoupled from a teat, the robot arm or a respective robot arm moves up to the teat cup. Simultaneously with or shortly after this motion, the teat cup which is to be uncoupled can be pulled up against the robot arm. In this method, it is preferred that the teat cups are uncoupable from the teats one after the other.

For a better understanding of the invention and to show how the same may be carried into effect, reference will

now be made, by way of example, to the accompanying drawings, in which:

Figure 1 is a side view of a milking box of the invention;

Figure 2 is a rear view of a milking robot, a teat cup being connected to a teat of an animal standing in the milking box;

Figure 3 is a rear view of the milking robot, wherein the teat cups are connected to the teats of an animal present in the milking box and wherein the robot arm is thereafter retracted to outside the milking box;

Figure 4 is a plan view of the milking box with the milking robot, wherein the teat cups have all four been connected to the teats of an animal standing in the milking box and wherein the robot arms have thereafter been retracted to outside the milking box;

Figure 5 is a side view of a milking box accommodating a cow, of which the front and rear teats are at unequal heights, and in which figure a detector is shown in the position in which it can determine the location of the rear teats, and

Figure 6 is a plan view of the milking box shown in Figure 5 containing the detector, and the manner in which this detector is movable and cleanable.

Figure 1 shows, in a side view, a milking box 1 in which a cow to be milked is present. The milking box 1 includes a railing 2 which limits the milking box at all four sides, an entrance door 3 at the rear side and two exit doors 4 and 5 having been arranged in this railing at the two longitudinal sides (see Figure 4). Via one of these exit doors the animal can be conducted from the milking box to a shed area or a pasture, whilst via the other door the animal can be conducted to a special isolation area, e.g. because mastitis has been detected during milking. The entrance and exit doors are under the control of a computer system, not further shown. At the leading side of the milking box 1 a feeding trough 6 has been disposed, which is part of an automatic feeding system. The animals to be milked wear a collar 7, which is equipped with a transponder 8 which

cooperates with a sensor 9 disposed at or near the feeding trough 6. When an animal enters the milking box 1 and has advanced that far that it can put its head into the feeding trough 6, the distance between the transponder 8 and the sensor 9 is such that communication between the two elements 8 and 9 occurs. The transponder 8 and the sensor 9, which is connected to the computer system, constitute an animal identification system. As soon as communication between the transponder 8 and the sensor 9 becomes possible, the animal is identified, which has for its result that a file stored for this animal in the memory of the computer system becomes accessible, which file includes various data, such as data for the automatic supply of food, the automatic connection of the teat cups and the subsequent automatic milking operation and for monitoring the heath condition of this animal.

After the animal has entered the milking box 1 and has been identified therein, a detector 10, here in the form of a laser detector, is moved to under the animal. In the Figures 1 and 4, the detector 10 is disposed on a robot arm system 11, formed by robot arms 15 and 16 which are pivotal about round vertical shafts 12 and 13, this robot arm system 11 being attached to the railing 2 in such a manner that it is pivotal about the shaft 13. The robot arms 15 and 16 are pivotal with the aid of computer-controlled motors 37 and 38, for which stepping motors are preferably employed. Using the detector 10, the position of the teats relative to the milking box 1 can be determined, whereafter teat cups 18 can be fitted on the teats. The detector 10 and the means for fitting the teat cups 18 to the teats together form a milking robot. In the embodiment shown, these means include a separate robot arm construction 9 for each of the teat cups 18. Such a robot arm construction 19 includes a first four-bar linkage 20, with the aid of which a vertical carrier 21 is connected capable of moving in the upward direction to frame portions 22 of the railing 2. The pivotal shafts, by means of which this four-bar linkage is connected to the frame portions, are denoted by 20A. At the lower side of the carrier 21 there is present a second four-bar linkage 23, with the aid of which a robot arm 24 is movable from outside

the milking box 1 into the milking box to under an animal present therein and can again be retracted to outside the milking box. This robot arm 24 is furthermore pivotal about a vertical shaft 25 relative to the carrier 21. Each of the robot arms 24 acts as a carrier for one or the teat cups 18. By means of the first and second four-bar linkages 20 and 23, respectively, and the pivotal construction about the shaft 25, the teat cup 18 connected to the robot arm 24 can be moved omnidirectionally. In the embodiment shown, the pivotal motion of the robot arm 24 round the shaft 25 is realized by a computer-controlled motor 14, the reciprocal motion of the robot arm 24 relative to the carrier 21 by a computer-controlled motor 17, whilst the up-and-down motion is realized with the aid of the first four-bar linkage by a computer-controlled operating cylinder 41, preferably a pneumatic cylinder. The motors 14 and 17 are preferably stepping motors.

A teat cup 18 is connected to the robot arm 24 by means of a flexible element, such as a cord 26, which cord is not only connected to a teat cup 18 but also to an operating cylinder, preferably a pneumatic cylinder, accommodated in the robot arm 24. If, as is shown in Figure 2, a teat cup 18, carried by the robot arm 24, is fitted on a teat, then, as soon as the teat cup 18 has been sucked to the teat with the aid of the vacuum produced therein, the cylinder accommodated in the robot arm 24 will be enabled, so that the robot arm 24 can be retracted to outside the milking box 1 and the teat cup 18 remains connected to the robot arm 24 only by the cord 26 and will, therefore, have a sufficient freedom of movement to track the animal's movements. In this situation, it may happen that the teat cups 18 are inhibited in their free motional capability by milk tubes 27 and possible pulsation tubes 28, more in particular when these tubes have been secured to the robot arm construction 19. It is, therefore, advantageous when the tubes 27, 28 can move as freely as possible and do not hamper the teat cups 18 when they follow the animal's movements. To that end, the tubes 27, 28 connected to the teat cups 18 extend during milking, taken in a plan view, from the teat cups to which these tubes are

connected, obliquely forwardly in the direction of walk of the animal and outwardly and thereafter the tubes extend in the shape of a loop (see Figure 4). From the teat cups the tubes 27, 28 extend to both sides of the milking box to beside the milking box. The tubes extend in the shape of a loop to the points of connection 29, provided at the side of the milking box, for the tubes 27, 28. The loop-shaped arrangement of the tubes increases the free motional capability of the teat cups. The further milk lines and vacuum lines of the milking system are connected to the points of connection. As two robot arm constructions 19 are disposed on both sides of the milking box 1, only one point of connection 29 on both sides is sufficient. Of course, there may be a point of connection for the tubes 27, 28 for each robot arm construction. Since the robot arms 24 are movable from outside the box obliquely rearwardly and inwardly to under the animal, the tubes 27 and 28 will first extend from a teat cup approximately in the same direction as in which the relevant robot arm 24 is located, whereafter the tubes extend in the shape of a loop transversely underneath the robot arm to the relevant point of connection 29. As between the teat cups 18 and the points of connection 29 the tubes are not connected to anything else, they can move freely near the milking box floor. Consequently, they experience a slight resistance and will substantially not obstruct the motion of the teat cups. When the teat cups have been connected to the teats, then the tubes 27, 28 will extend in a mainly horizontal plane and the tubes will be movable in this plane (see Figure 3). When the teat cups are to be uncoupled, then, because of the fact that the robot arms have been moved to outside the milking box during milking, these robot arms must first be moved towards the teat cups, whilst then simultaneously or shortly thereafter the operating cylinders in the robot arms 24 can be energized in order to pull the teat cups up against the holder at the end of the robot arm 24. Since there are four robot arm constructions 19 which operate independently of each other, the teat cups can be coupled both simultaneously and one after the other and independently of each other to the teats

of an animal. Also uncoupling of a teat cup can be effected independently of the other teat cups.

When, after the milking operation has ended, a teat cup 18 has been pulled up against a relevant robot arm 24 and this arm has thereafter been returned to its position of rest outside the milking box, the teat cup can be automatically cleaned in this rest position. To that end (see Figures 1 to 3), spray heads 42 connected to a (non-shown) washing circuit are positioned at or near both sides of the milking box. Teat cups are connectable independently of each other to these spray heads 42, more in particular when the robot arms 24 carrying the teat cups 18 have been moved to their position of rest.

Contrary to the cow standing in the milking box shown in Figure 1, the cow in the milking box shown in Figure 5 has teats which are at unequal heights. It regularly happens that cows have teats which are located very closely next to each other and/or are at different heights. Because of the advantageous construction of a separate robot arm structure for the detector 10 in accordance with the invention, it becomes possible to determine also the position of such teats. Such a robot arm structure for the detector 10 is illustrated in Figures 5 and 6. The means for the connection of the teat cups have been omitted from these drawings. The detector 10 is located on a robot arm structure 30, which is of such a design that the detector is omnidirectionally or substantially omnidirectionally movable in the milking box. The detector 10 is connected via a four-bar linkage 31 to a robot arm 32, which is part of the robot arm structure 30. The robot arm 32 is pivotal about a vertical shaft 33, arranged at the side of the milking box 1. The four-bar linkage 31 itself is connected capable of pivoting about a vertical shaft 34 to the robot arm 32. The detector 10 is further connected, capable of pivoting about its own longitudinal shaft 35, to the four-bar linkage 31 (see Figure 5). Because of the feature that it is pivotal about the shafts 33, 34 and 35 and the feature that it is movable in height with the aid of the four-bar linkage 31, the detector 10 can move around the teats in all positions and more

particularly always in such a position that the teats can be detected, whatever their positions relative to each other. The four-bar linkage 31 and the pivotability of the detector 10 about its own longitudinal shaft 35 renders it possible for the detector to effect a scanning motion in different directions, so that also teats differing from normal teats can be detected. The scanning motion in the upward direction can then be effected through at least approximately five centimetres and can preferably amount to approximately ten centimetres in the vertical direction. Should there be animals of which the difference in height between the front and rear teats of the udder is still larger, then the pivotal motion can be adapted thereto.

In the present invention, the detector is constituted by a laser detector and positioned as such in a housing having a window, through which the laser beam is transmitted. When this window gets dirty, the detection of the teats may not be sufficiently accurate. It is, therefore, important to provide the implement with means, with which the detector 10 can be cleaned. To enable cleaning in an efficient manner, the pivotal motion about the shafts 33 and 34 is such that the detector 10 can be moved to outside the milking box 1 to a cleaning position, as indicated by broken lines in Figure 6. In this position, the detector can then be cleaned using a cleaning member 36 provided for that purpose. This cleaning member 36 may include spraying and/or blowing means for spraying a cleaning agent or blowing air against the window of the detector 10, respectively.

Performing the pivotal motions about the shafts 33 and 34 and a motion in the upward direction by means of the four-bar linkage 31, as well as the rotation of the detector 10 about its own longitudinal shaft are monitored by computer-controlled motors, preferably stepping motors 37, 38, 39 and 40. Although in many cases the detector can be placed in a fixed working position, shown in Figure 6, it may sometimes be necessary for the detector 10 to be operative in a plurality of positions to enable a determination of the position of the various teats. Thus, it may be necessary for the detector 10 to be arranged for the determination of the

position of the front teats in a first working position in the midway point between and before the leading teats, whilst for the determination of the position of the trailing teats the detector must be placed in a position further to the rear. It may alternatively be possible that the detector must not be arranged in the midway point between the teats, but more to the side; the latter will more specifically be the case when one teat would be in the shadow of the other teat relative to the detector or when two teats are very close to each other. Since the relative position of the teats of the several animals is known, this can be taken into account on arranging the detector in the working position under the animal. The computer system may include a control programme adapted to the individual animals for moving the detector to an animal-specific position under the udder, which control programme can be addressed with the aid of the animal identification system for the relevant animal. This animal-attuned control program can be triggered on the basis of data present in the computer system in the data file for each animal. The detector 10 consequently has a position of rest (indicated by broken lines in Figure 4), as well as a cleaning position (see Figure 6) and one or more working positions adapted to the individual animals.

The invention is in no way limited to the embodiments described here, but also comprises all the modifications which may be applied by a person skilled in the art and which are within the scope of the claims described hereafter.

CLAIMS

1. A construction including an implement for automatically milking animals, such as cows, having one or more milking boxes (1) and one or more milking robots for automatically coupling teat cups (18) to the teats of the animals, characterized in that during milking a milk tube (27) connected to a teat cup (18) is freely movable in such a manner that the teat cup can follow the animal's movements with a slight resistance.

2. A construction as claimed in claim 1, characterized in that a milk tube (27) is of such a construction that during milking it is movable with a slight resistance over or at a slight height above the floor of a milking box (1).

3. A construction including an implement for automatically milking animals, such as cows, having one or more milking boxes (1) and one or more milking robots for automatically coupling teat cups (18) to the teats of the animals, characterized in that a milk tube (27) is of such a construction that during milking it is movable with a slight resistance over or at a slight height above the floor of a milking box (1).

4. A construction as claimed in any one of the preceding claims, characterized in that during milking a milk tube (27) extends freely movably under a robot arm (24).

5. A construction as claimed in any one of the preceding claims, characterized in that during milking a milk tube (27) extends in a mainly horizontal plane and is movable in this plane.

6. A construction as claimed in any one of the preceding claims, characterized in that, in a plan view, a milk tube (27) extends in the shape of a loop, more in particular in the shape of a U.

7. A construction as claimed in any one of the preceding claims, characterized in that during milking a milk tube (27) extends, in a plan view, from the teat cup (18) obliquely forwardly in the direction of walk of the animal and outwardly and from there in the shape of a loop.

8. A construction including an implement for

automatically milking animals, such as cows, having one or more milking boxes (1) and one or more milking robots for automatically coupling teat cups (18) to the teats of the animals, characterized in that during milking a milk tube (27) extends, in a plan view, from the teat cup (18) obliquely forwardly in the direction of walk of the animal and outwardly and from there in the shape of a loop.

9. A construction as claimed in any one of the preceding claims, characterized in that the milk tubes (27) extend from the teat cups (18) on both sides of a milking box (1) to beside the milking box (1).

10. A construction as claimed in any one of the preceding claims, characterized in that a milk tube (27) extends in the shape of a loop to a point of connection (29) for a milk line provided at the side of a milking box (1).

11. A construction as claimed in any one of the preceding claims, characterized in that a milking robot includes at least one omnidirectionally movable robot arm (19) which acts as a carrier for one of the teat cups (18), whilst the robot arm (19), when a teat cup has been fitted on a teat of the animal, can be brought to outside the reach of an animal standing in a relevant milking box (1).

12. A construction as claimed in any one of the preceding claims, characterized in that a milking robot includes at least two robot arms (19) which are independently movable relative to each other, and act as a carrier for one or more teat cups (18), these robot arms (19) being arranged on both sides of or near a milking box (1) and include adjusting means which are arranged one above the other.

13. A construction as claimed in claim 12, characterized in that the adjusting means include a four-bar linkage (20), with the aid of which a robot arm (19) is movable in height.

14. A construction as claimed in claim 12 or 13, characterized in that the adjusting means include a further four-bar linkage (23), with the aid of which a teat cup (18) is movable from the side of a milking box (1) to under the udder of an animal present therein.

15. A construction as claimed in claims 13 and 14,

characterized in that the further four-bar linkage (23) is connected, capable of rotating around a mainly vertical shaft (25), to the said first four-bar linkage (20).

16. A construction as claimed in any one of the preceding claims, characterized in that in a robot arm (24) there is accommodated an adjusting cylinder, more in particular a pneumatic cylinder, with the aid of which, through the intermediary of a flexible element (26), such as a cord, a teat cup (18) can be pulled up to the robot arm (24).

17. A construction as claimed in any one of the preceding claims, characterized in that a detector (10), more specifically a laser detector, for the determination of the position of the teats of the animals is present, this detector (10) being disposed on a separate robot arm construction (30).

18. A construction as claimed in claim 17, characterized in that the detector (10) is movable from a rest position at or near the side of a milking box (1) to a first and a second working position, whilst in one of these working positions the position of a teat of an animal standing in the milking box (1) can be determined.

19. A construction as claimed in any one of the preceding claims, characterized in that a teat cup (18) is automatically cleaned at or near a side of a milking box (1).

20. A construction as claimed in claim 19, characterized in that at or near both sides of a milking box (1) spray heads (36) are provided which are connected to a washing circuit and to which the teat cups (18) are connectable independently of each other.

21. A construction as claimed in claim 19, characterized in that at or near the two sides of a milking box (1) spray heads (36) are provided which are connected to a washing circuit and to which the teat cups are connected in the rest position in which they are pulled up to a corresponding robot arm (24)

22. A construction as claimed in one or more of the preceding claims, and/or as described and illustrated in the accompanying description and drawings.

23. A method of milking animals, such as cows, in a

milking box and with the aid of a milking robot having teat cups which are automatically couplable to the teats of an animal and wherein, after the teat cups have been coupled, the robot arm or robot arms of the milking robot can be moved to mainly outside the milking box, whereas the teat cups remain connected to the robot arm or robot arms by means of a flexible element, such as a cord, and whilst, when a teat cup is to be uncoupled from a teat, the robot arm or a respective robot arm moves up to the teat cup.

24. A method as claimed in claim 23, characterized in that, if during uncoupling of a teat cup the robot arm or a respective robot arm moves to the teat cup, simultaneously or shortly thereafter the teat cup is pulled up to the robot arm.

25. A method as claimed in claim 23 or 24, in which the teat cups can be uncoupled from the teats one after the other.

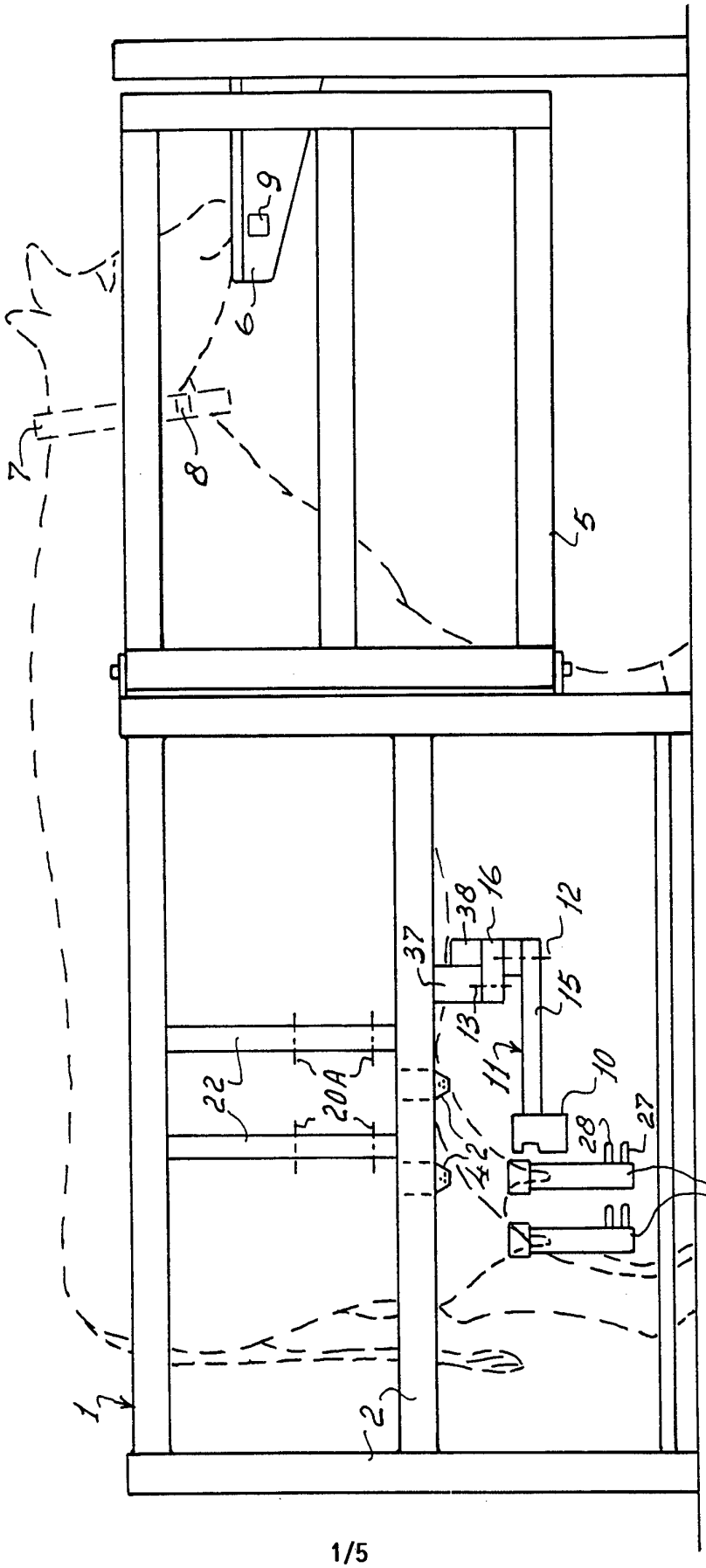

FIG. 1

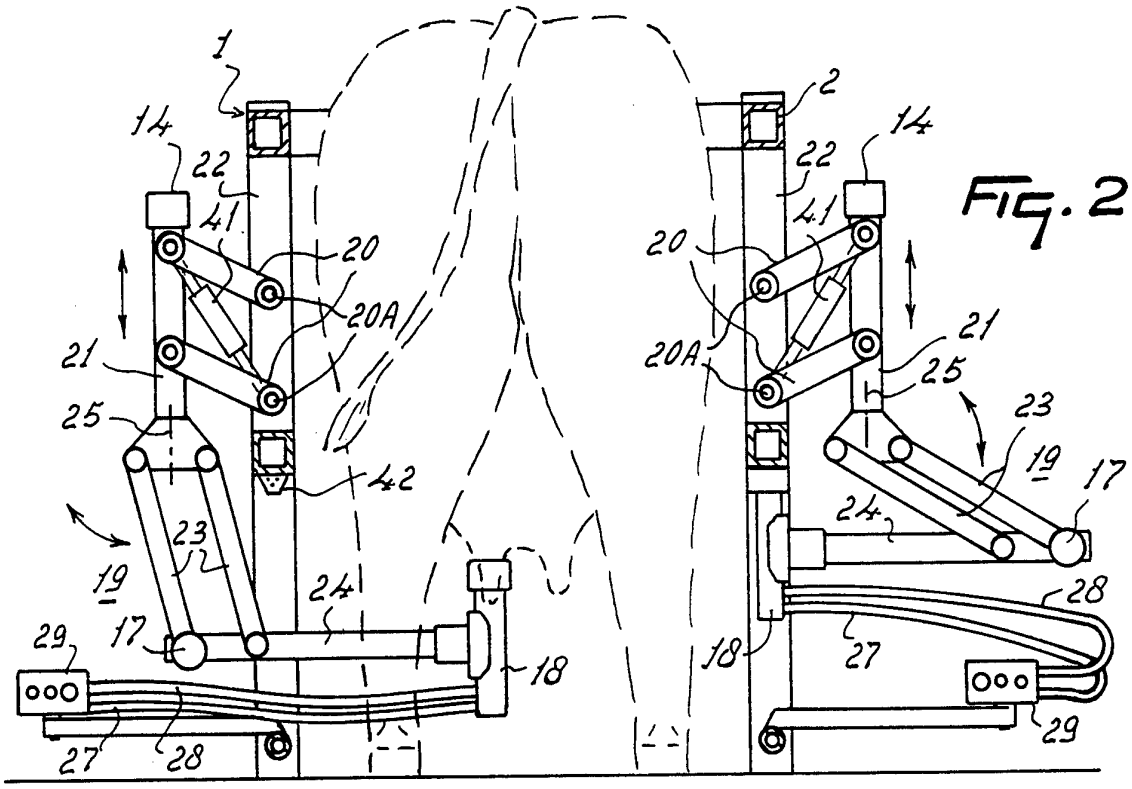
1
2
14
22
41
20
20A
21
25
23
19
17
24
42
18
27
28
29

FIG. 2

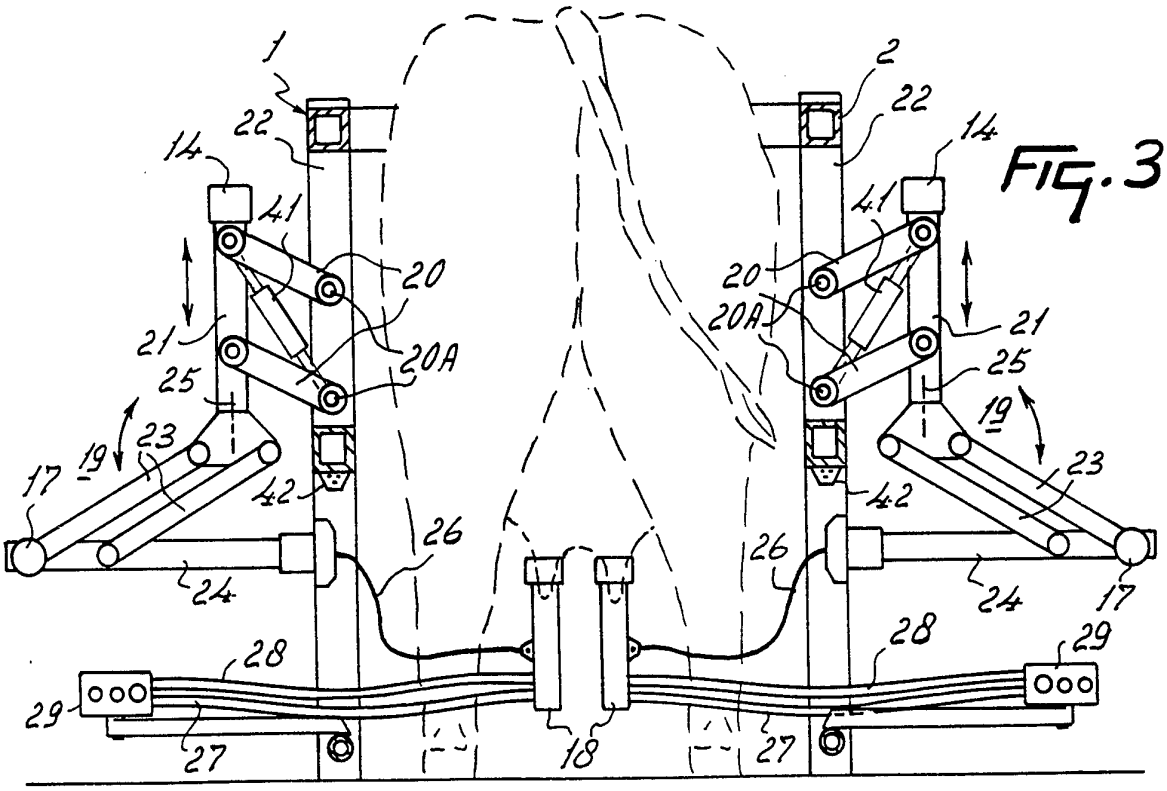
1
2
22
14
41
20
20A
21
25
19
23
17
42
24
26
28
29
27
18

FIG. 3

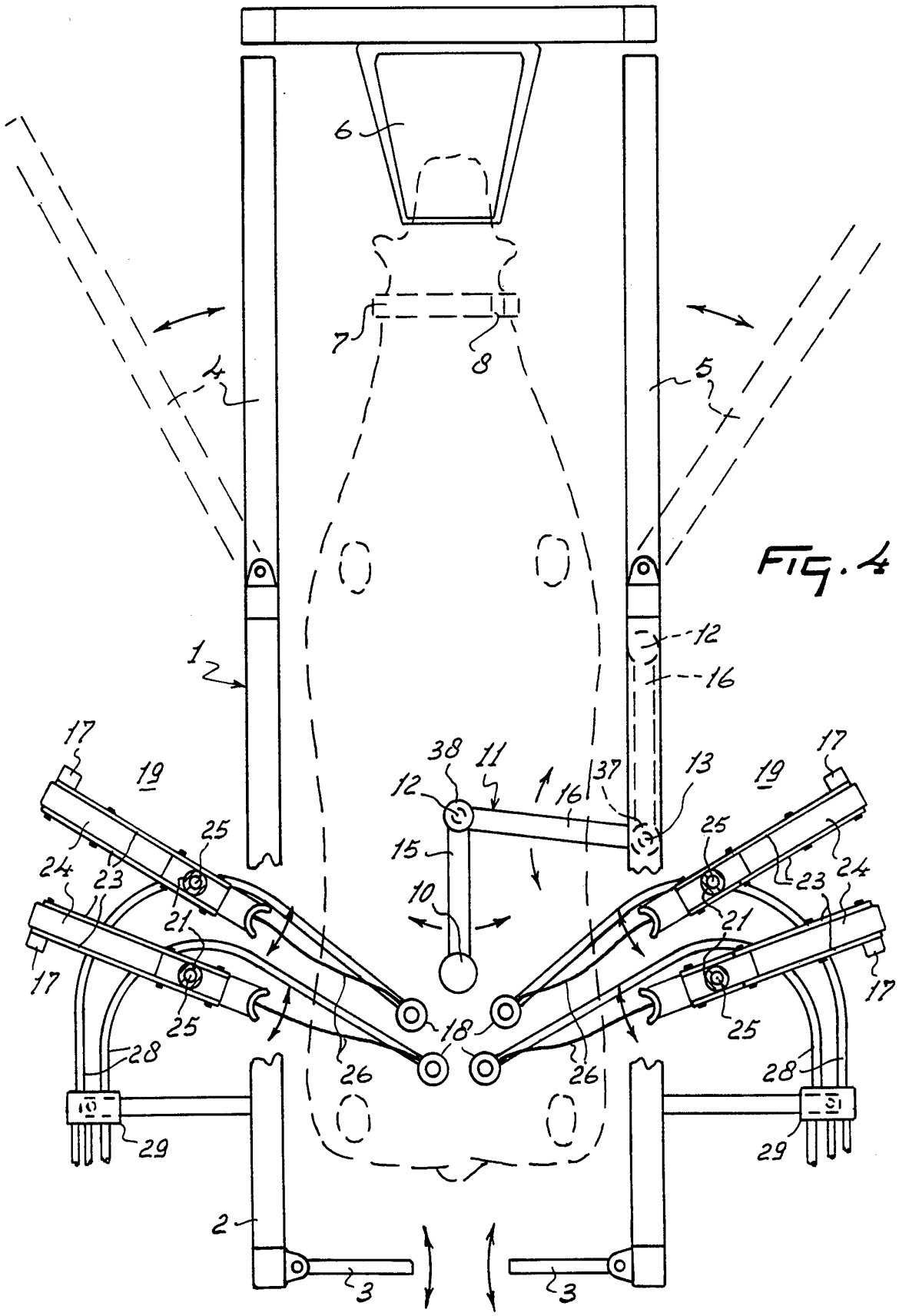

FIG. 4

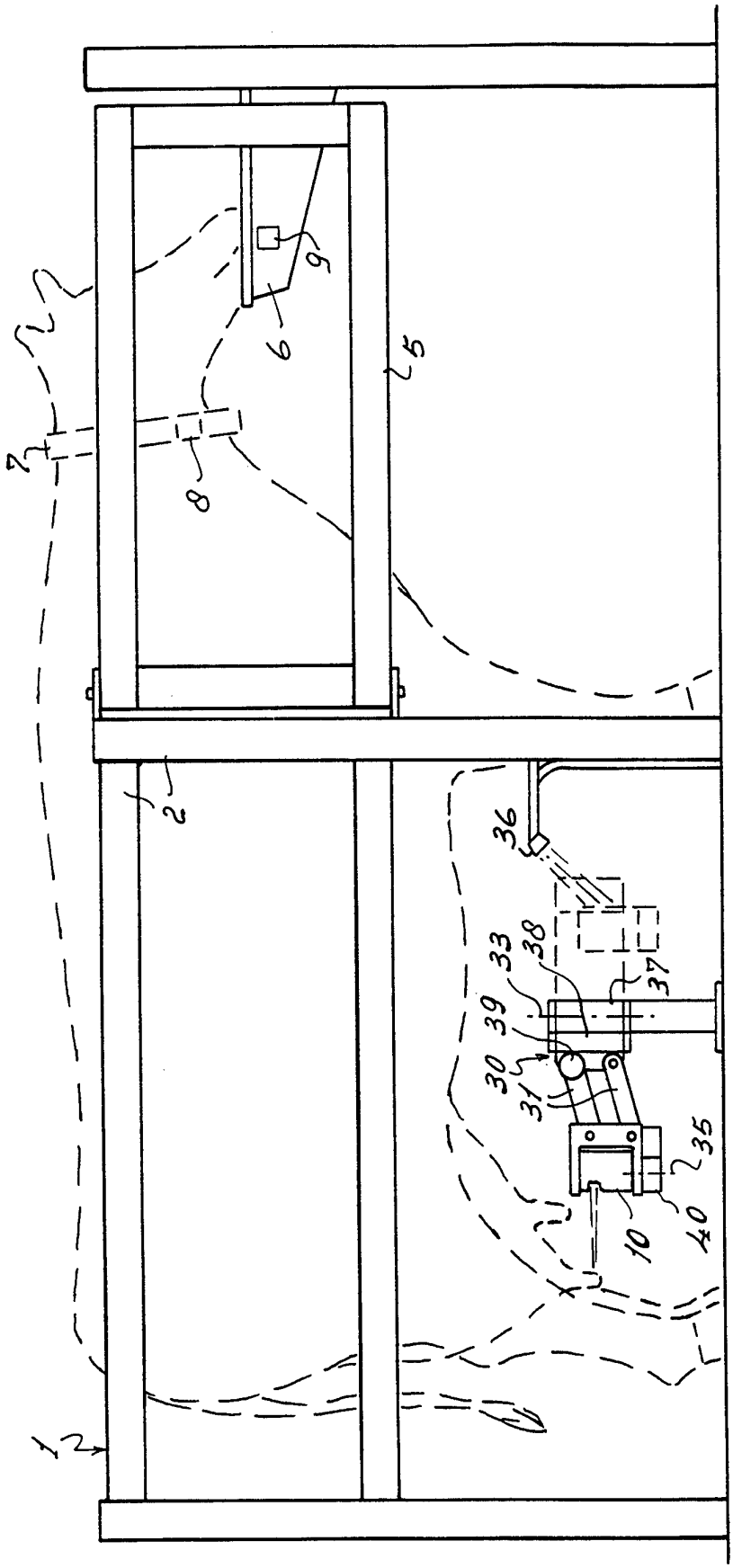

FIG. 5

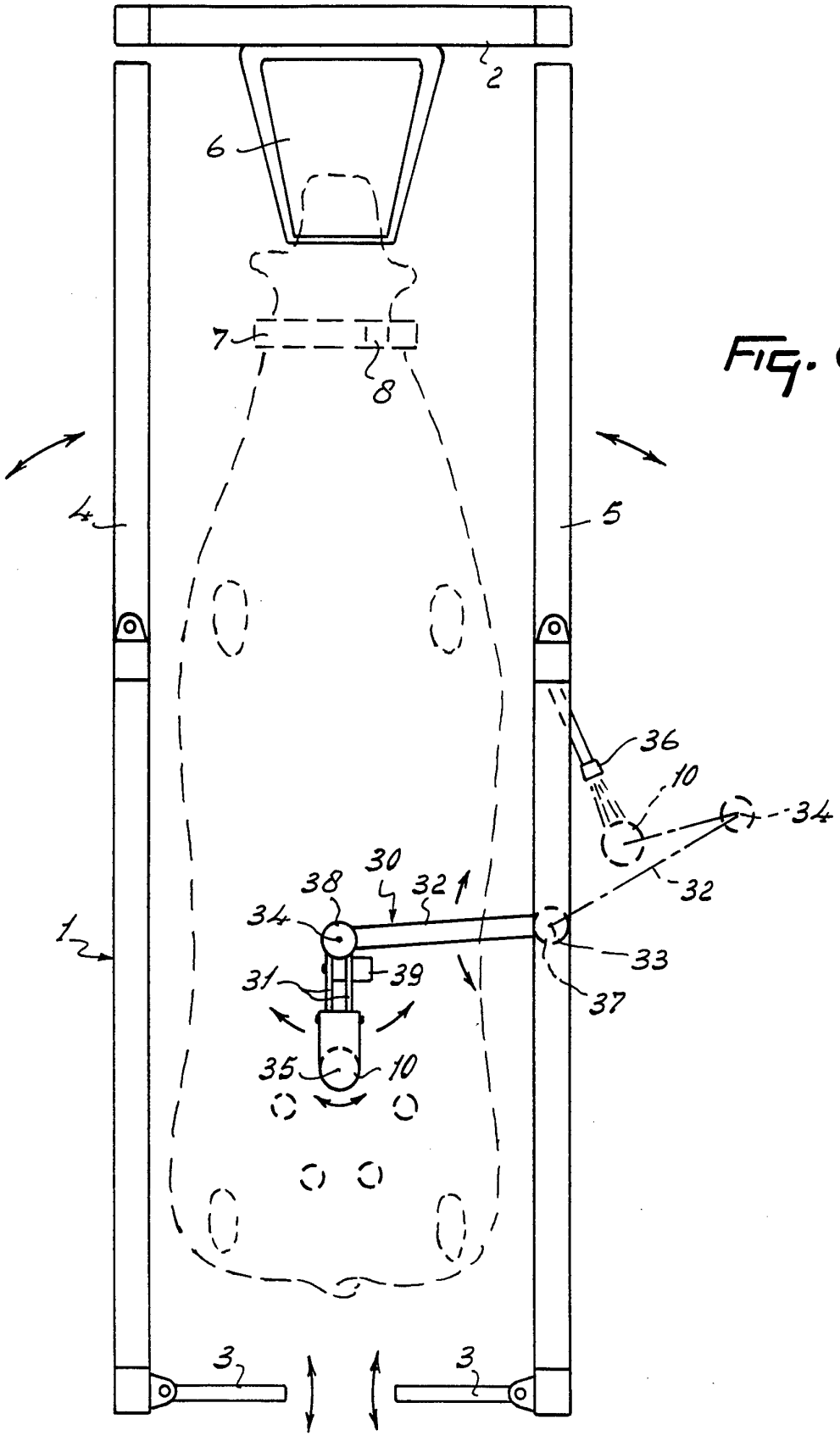

FIG. 6

INTERNATIONAL SEARCH REPORT

International Application No
PCT/NL 95/00231

A. CLASSIFICATION OF SUBJECT MATTER
IPC 6 A01J5/017 A01K1/12

According to International Patent Classification (IPC) or to both national classification and IPC

B. FIELDS SEARCHED

Minimum documentation searched (classification system followed by classification symbols)
IPC 6 A01J A01K

Documentation searched other than minimum documentation to the extent that such documents are included in the fields searched

Electronic data base consulted during the international search (name of data base and, where practical, search terms used)

C. DOCUMENTS CONSIDERED TO BE RELEVANT

Category °	Citation of document, with indication, where appropriate, of the relevant passages	Relevant to claim No.
X	EP,A,0 551 960 (VAN DER LELY) 21 July 1993 see column 4, line 17 - column 5, line 22 see column 7, line 51 - column 8, line 24	1-4,17, 25
A	see column 7, line 1 - line 33 see claims; figures ---	19
X	EP,A,0 545 916 (VAN DER LELY) 9 June 1993 see column 6, line 19 - column 7, line 37 see claims; figures ---	1-4,17, 25
A	EP,A,0 091 892 (ALFA-LAVAL) 19 October 1983 see page 5, line 29 - page 6, line 13 see claims; figures -----	1,19, 23-25

☐ Further documents are listed in the continuation of box C.

☒ Patent family members are listed in annex.

° Special categories of cited documents :

"A" document defining the general state of the art which is not considered to be of particular relevance

"E" earlier document but published on or after the international filing date

"L" document which may throw doubts on priority claim(s) or which is cited to establish the publication date of another citation or other special reason (as specified)

"O" document referring to an oral disclosure, use, exhibition or other means

"P" document published prior to the international filing date but later than the priority date claimed

"T" later document published after the international filing date or priority date and not in conflict with the application but cited to understand the principle or theory underlying the invention

"X" document of particular relevance; the claimed invention cannot be considered novel or cannot be considered to involve an inventive step when the document is taken alone

"Y" document of particular relevance; the claimed invention cannot be considered to involve an inventive step when the document is combined with one or more other such documents, such combination being obvious to a person skilled in the art.

"&" document member of the same patent family

Date of the actual completion of the international search	Date of mailing of the international search report
11 September 1995	13.10.95

Name and mailing address of the ISA	Authorized officer
European Patent Office, P.B. 5818 Patentlaan 2 NL - 2280 HV Rijswijk Tel. (+31-70) 340-2040, Tx. 31 651 epo nl, Fax: (+31-70) 340-3016	Piriou, J-C

INTERNATIONAL SEARCH REPORT

International Application No
PCT/NL 95/00231

Patent document cited in search report	Publication date	Patent family member(s)		Publication date
EP-A-0551960	21-07-93	NL-A-	9200091	16-08-93
		DE-A-	4300884	22-07-93
		EP-A-	0551956	21-07-93
		EP-A-	0551957	21-07-93
		EP-A-	0551958	21-07-93
		EP-A-	0551959	21-07-93
		EP-A-	0555895	18-08-93
		FR-A-	2690809	12-11-93
EP-A-0545916	09-06-93	NL-A-	8701735	16-02-89
		EP-A-	0630564	28-12-94
		EP-A-	0630565	28-12-94
		EP-A-	0634096	18-01-95
		EP-A-	0643909	22-03-95
		AT-T-	116798	15-01-95
		DE-D-	3852767	23-02-95
		DE-T-	3852767	13-07-95
		DE-A-	3875414	26-11-92
		EP-A,B	0300582	25-01-89
		EP-A-	0448132	25-09-91
		EP-A-	0480541	15-04-92
		JP-A-	1051030	27-02-89
		US-A-	4838207	13-06-89
EP-A-0091892	19-10-83	SE-B-	430559	28-11-83
		DE-A-	3378349	08-12-88
		SE-A-	8202278	09-10-83
		US-A-	4508058	02-04-85