United States Patent [19]

Butler

[11] **3,805,724**

[45] **Apr. 23, 1974**

[54] **SAILBOAT CANOPY APPARATUS**

[76] Inventor: **Frank W. Butler,** 3807 Weatherly Cir., Westlake Village, Calif. 91324

[22] Filed: **Oct. 24, 1972**

[21] Appl. No.: **299,690**

[52] **U.S. Cl.** ..... **114/71,** 9/1 R
[51] **Int. Cl.** **B63b 29/02**
[58] **Field of Search** ..... 114/71, 66, 201–203, 114/39, 90; 9/1 R

[56] **References Cited**

UNITED STATES PATENTS

2,280,729	4/1942	Sutton	114/71
3,376,586	4/1968	Forsyth et al.	114/71
2,780,197	2/1957	Von Tell	114/202
2,570,911	10/1951	Birdlebough	9/1 R
3,165,762	1/1965	Hage	114/71

FOREIGN PATENTS OR APPLICATIONS

1,374,486	10/1962	France	114/71
435,641	9/1925	Germany	114/71

Primary Examiner—Trygve M. Blix
Assistant Examiner—Stuart M. Goldstein
Attorney, Agent, or Firm—Robert E. Geauque

[57] **ABSTRACT**

In a sailboat which has an interior cabin with an access opening being provided through the wall structure of the sailboat into the cabin, a canopy adapted to cover in a water-tight manner the upper portion of the access opening, the canopy being pivotally connected to the cabin wall structure with the canopy being movable between a closed position covering the upper portion of the access opening to an open position spaced upward and forward from the access opening, the canopy to contact the main mast of the sailboat, a fastener means connected between the canopy and the mast to retain the canopy in the opened position.

6 Claims, 10 Drawing Figures

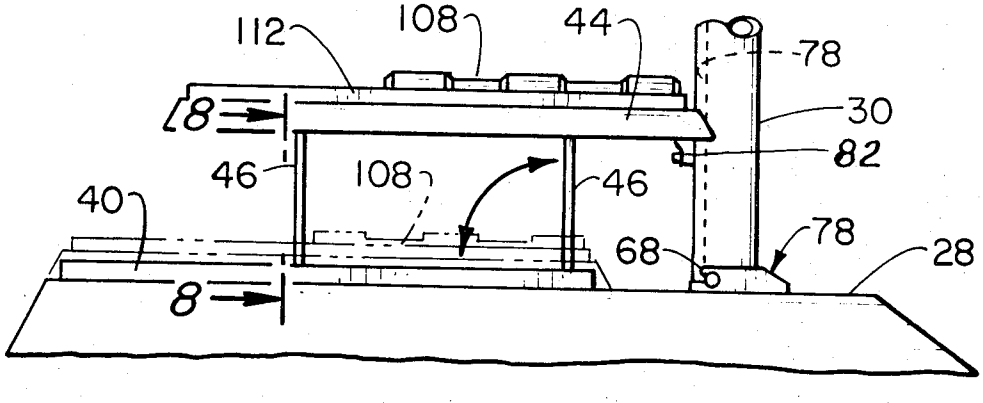

Fig. 1.

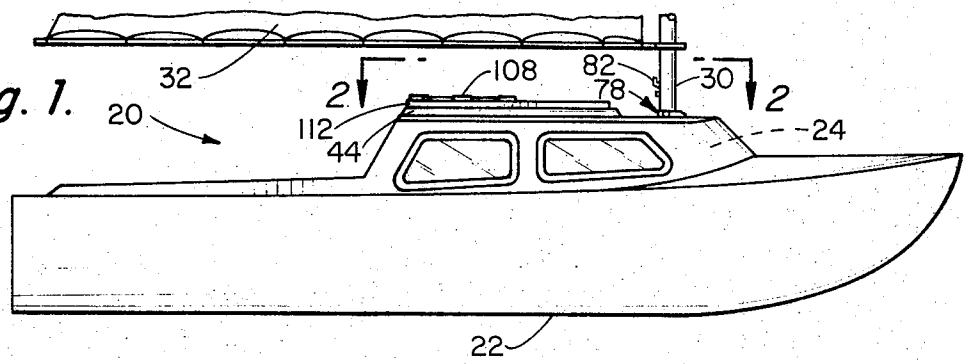

Fig. 2.

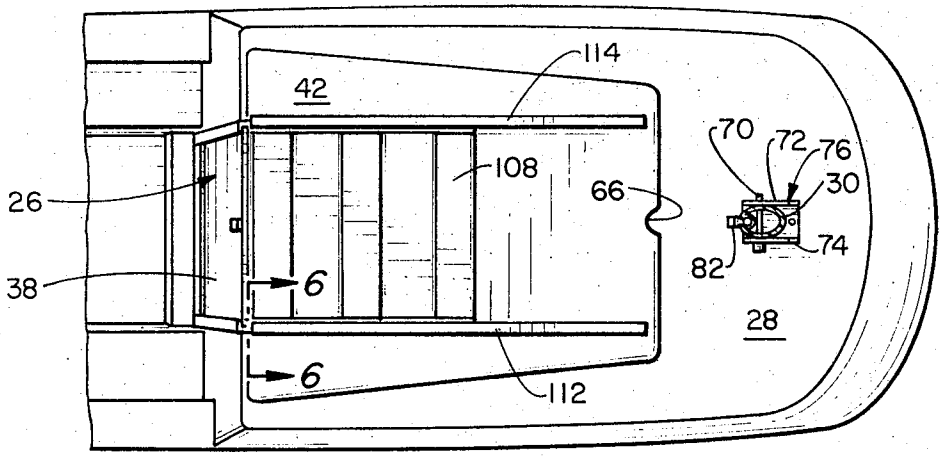

Fig. 6.

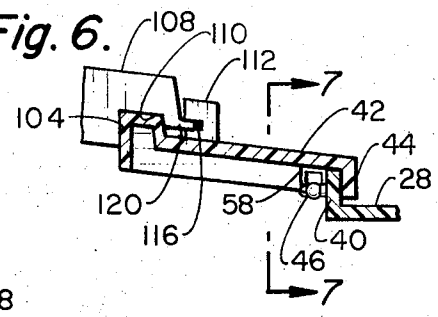

Fig. 3.

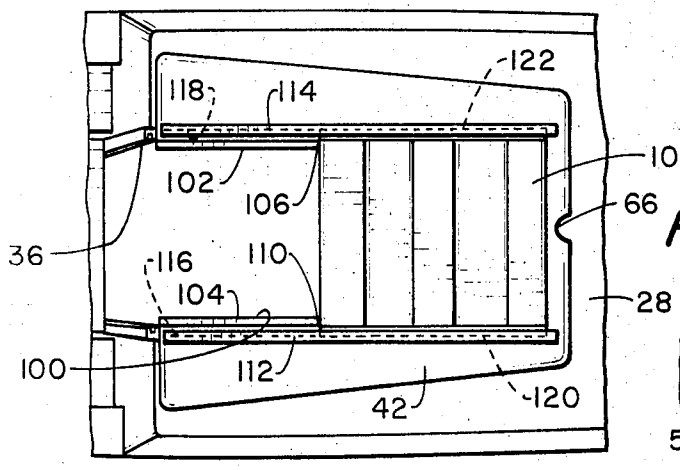

Fig. 7.

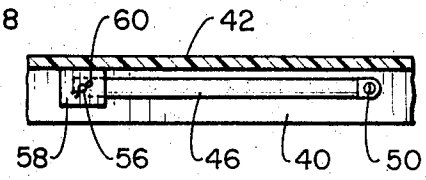

Fig. 4.

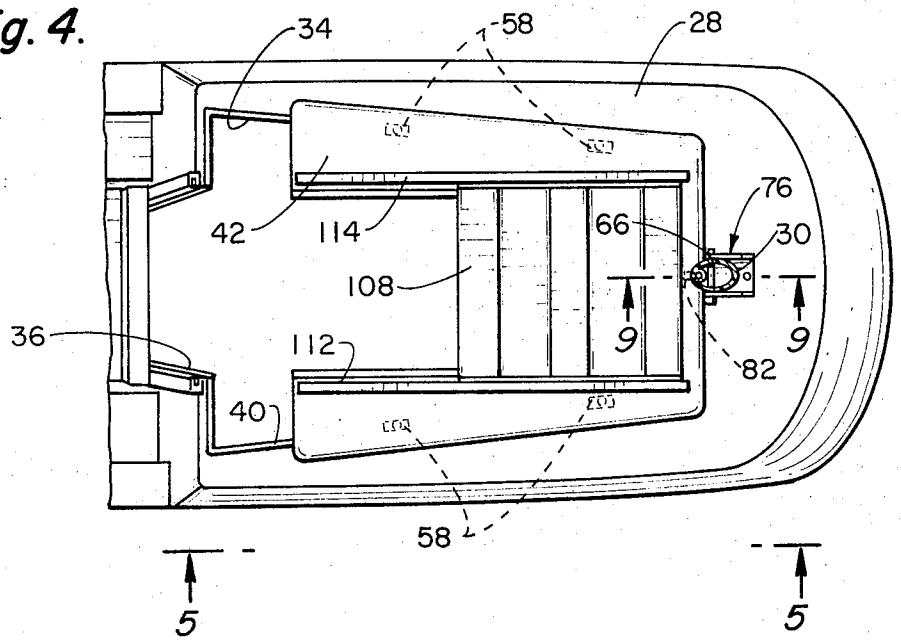

Fig. 5.

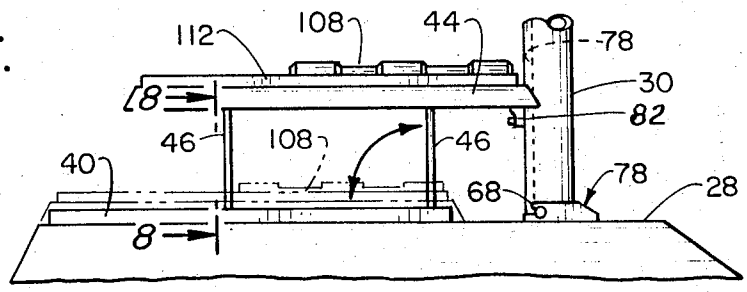

Fig. 8.

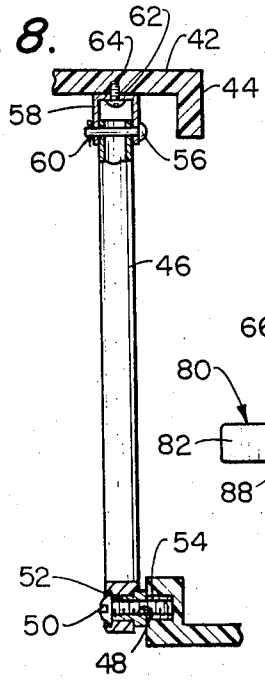

Fig. 10.

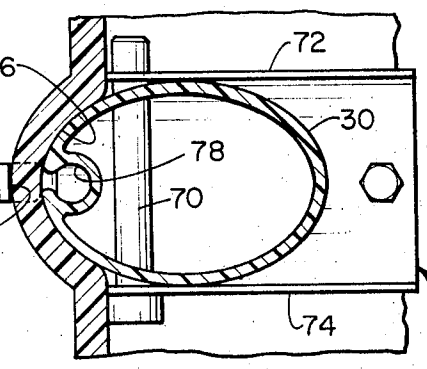

Fig. 9.

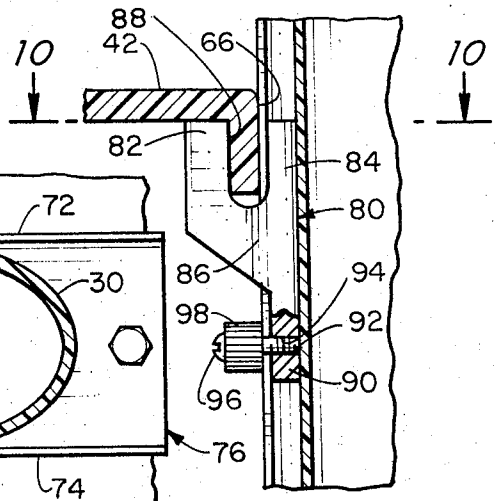

SAILBOAT CANOPY APPARATUS

BACKGROUND OF THE INVENTION

Within smaller sized sailboats which have an interior cabin, the access opening to the cabin must be capable of being tightly closed during rough weather situations in order to keep the water from entering the cabin. It is desired that this access opening be maintained as small as possible. However, when the access opening is open, it is desired that easy movement it provided through the access opening.

The normal type of small sailboat employs a simple hatch cover which is adapted to cover the upper portion of the access opening and be slidable fore and aft. However, the use of such a simple hatch cover provides limited access to the cabin and normally makes it difficult for a person to enter the cabin or leave the cabin.

In an effort to overcome this difficulty, it has been known to employ the use of a separate canopy. The movable hatch cover is mounted within an enlarged canopy with the canopy being adapted to cover a larger sized access opening. The canopy is to then be movable upward in a spaced manner from the access opening which thereby gives a substantial increased amount of open area to provide for ease of movement through the access opening. However, the previously known type of canopy movement is effected through use of a pulley arrangement connected to a portion of the mast with the canopy being moved directly upward above the access opening. Because of the location of the canopy, the aft portion of the canopy can still readily contact a person's head during entry and exit from the cabin. Additionally, when in the open position, the canopy is not positively secured and therefore wobbles during use of the sailboat. Further, several different operations were required in order to move the canopy to the open position and it normally required two people.

SUMMARY OF THE INVENTION

The sailboat canopy structure of this invention is designed to overcome the above referred to difficulties. The canopy structure of this invention provides for easy entry and exit of a person through the access opening into the cabin of a sailboat.

The sailboat for which the canopy structure of this invention is designed is to be what is usually termed a smaller sized sailboat generally in the 20 to 30 foot range in length. This sailboat is to include an interior cabin with the access opening in the cabin being provided at the aft end of the cabin. The access opening includes a side portion and an upper portion. The side portion is closable with a simple cover that is completely detachable. The upper portion of the access opening is to be closable by an enlarged canopy with the canopy including a slidable hatch cover mounted therein. The canopy is to be pivotally attached to the wall of the cabin by the means of four spaced apart rods. The pivoting action of the canopy from the closed position to the open position is forward and upward. When the canopy is in the open position, it comes into contact with the main mast of the sailboat. Fastening means is attached to the mast and is to be connected between the canopy and the mast to retain the canopy in the open position. When in the open position, the hatch cover located upon the canopy can be also moved forward to provide an access area into the cabin.

BRIEF DESCRIPTION OF THE DRAWINGS

FIG. **1** is a side view of a sailboat in which the canopy structure of this invention is employed;

FIG. **2** is a top view of the canopy structure of this invention taken along line **2—2** of FIG. **1**;

FIG. **3** is a top view similar to FIG. **2** but showing the hatch cover which is located upon the canopy in the open position;

FIG. **4** is a top view similar to FIG. **3** but showing the canopy connected to the mast of the sailboat;

FIG. **5** is a side view taken along **5—5** of FIG. **4**;

FIG. **6** is a cross-sectional view taken along line **6—6** of FIG. **2** showing in more detail the canopy and hatch cover structure;

FIG. **7** is a cross-sectional view taken along line **7—7** of FIG. **6**;

FIG. **8** is a cross-sectional view taken along line **8—8** of FIG. **5**;

FIG. **9** is a cross-sectional view taken along line **9—9** of FIG. **4** and showing in more detail the connection between the mast and the canopy; and

FIG. **10** is a cross-sectional top view taken along line **10—10** of FIG. **9**.

DETAILED DESCRIPTION OF THE SHOWN EMBODIMENT

Referring particularly to the drawings, there is shown a sailboat **20** which is generally constructed of a hull **22**, an interior cabin **24**, an access opening **26** into the cabin, a top **28** to cover a portion of the interior cabin **24**, a mast **30** to which is to be connected a sail **32**. The access opening **26** includes an upper portion **34** and a lower (or aft) portion **36**. The access opening **26** is provided through the top **28**. The lower portion **36** is to be closable by a door **38** which is to be completely detachable from the top **28** and placed, when removed, in another area of the sailboat **20**. Surrounding the upper portion **34** of the access opening **26** is a peripheral ledge **40**. The ledge **40** is formed as an integral extension of the top **28**.

The downward peripheral edge **44** of canopy **42** is adapted to be in contact with the ledge **40** and substantially cover the upper portion **34** of the access opening **26**.

Four in number of rods **46** are pivotally connected to the wall of the interior cabin **24** adajcent the ledge **40**. Each rod **46** includes an aperture in one end thereof adapted to permit insertion of a bolt type of fastener **50**. A spacer **52** is to be located about the bolt **50** in between the rod **46** and the ledge **40**. The bolt **50** is to be threaded within an insert **54** which is fixedly mounted within the wall of the cabin **24**.

The upper end of each of the rods **46** is pivotally connected to a pivot pin **56** through a bifurcated element **58**. The pivot pin **56** is prevented from being removed from the element **58** by means of a cotter pin **60**.

The apex portion of the bifurcated element **58** is enlarged to form a flat plate **62**. Each of the plates **62**, there being four in number, is fixedly secured by appropriate fasteners **64** to the underneath side of the canopy **42**.

Located within the fore edge of the canopy **42** is a recess **66**. The placement of each of the rods **46** is so that when the canopy **42** is in the open position, the mast **30**

of the sailboat is located within the recess **66.** The mast **30,** at its lower end thereof, has a mounting pin **70** extending therethrough. The pin **70** is to be located within bayonet-type slots **68** formed in the spaced apart legs **72** and **74** of a U-shaped bracket **76.** The U-shaped bracket **76** is to be fixedly attached to the top **28** forward of the access opening **26.**

The mast **30** also includes a longitudinal groove **78** throughout its longitudinal length along its aft edge. The aft edge of the groove **78** is narrowed. A U-shaped locking mechanism **80** is employed which includes a pair of spaced apart legs **82** and **84** which are connected together through an apex **86.** A slot **88** separates the legs **82** and **84.** Leg **84** is extended to form an extension **90.** A bolt fastener **92** is threadedly mounted within aperture **94** of the extension **90.** Adjacent the head **96** of the bolt **92** is located a knob **98.** The leg **84** and extension **90** are formed basically cylindrical in configuration. The leg **84** and the extension **90** are to cooperate in a loose fitting manner within groove **78** and be slidable therein.

Formed within the canopy **42** is a U-shaped opening **100.** The sides of the opening **100** are formed into upstanding members **102** and **104.** Member **102** is to establish a close-fitting but sliding relationship with a groove **106** formed within hatch cover **108.** In a similar manner, ledge **104** is to establish a close-fitting but sliding relationship with a groove **110** formed within hatch cover **108.** A guide bar **112** is fixedly secured upon the upper surface of the canopy **42** and located adjacent the upstanding member **104.** The lateral edges of the hatch cover **108** is formed into lips **120** and **122.** Lip **120** is to slidingly cooperate within slot **116** which is located within guide bar **112.** Lip **122** is to slidingly cooperate within slot **118** which is located within a guide bar **114.** Guide bar **114** is mounted upon the upper surface of the canopy **42** adjacent the upstanding member **102.**

The operation of the canopy of this invention is as follows: It will be presumed that the canopy **42** is in the closed position not permitting access into the interior cabin **24.** An appropriate locking mechanism is connectable between the hatch cover **108** and the door **38.** In order to gain access to the interior cabin **24,** the locking mechanism connecting the hatch cover **108** and the door **38** is unlatched and the door **38** is then removed. The operator then slides forwardly the hatch cover **108** with respect to the canopy **42.** The operator then exerts a manual upward pushing force against the canopy **42** which causes the canopy **42** to be pivoted upwardly and forwardly by means of the rods **46.** The forward movement of the canopy **42** is continued until the mast **68** is located within the recess **66.** The operator then moves the leg **84** and its connected extension **90** of the locking mechanism **80** through the groove **78** until the edge **44** of the canopy **42** cooperates within the slot **88.** The operator then rotates the bolt **92** by means of knob **98** forcing the extension **90** into frictional engagement with the walls of the groove **78.** As a result, the canopy **42** is fixedly retained in the open position and movement of such to the closed position is now prevented. With the canopy **42** in the open position and the hatch cover **108** moved forwardly, convenient access to the interior cabin **24** is provided.

What is claimed as new in support of Letters Patent is:

1. In combination with a sailboat which has an interior cabin, said cabin being substantially closed by walls, and having a top access opening, the improvement comprising:

a canopy adapted to cover said access opening, said canopy connected by a first means to said walls and being pivotally movable between an open position spaced from said access opening and a closed position covering said access opening;

said first means comprising a plurality of spaced apart rods pivotally connected to both said canopy and said walls, the movement of said canopy from said closed position to said open position results in said canopy being pivoted upward and forward with respect to said cabin;

said saiboat having a mast connected to said sailboat forward of said access opening, said canopy having a forward portion in contact with said mast when said canopy is in said open position; and

second means comprising a rigid link connected between said mast and said forward portion of said canopy to maintain said canopy in the open position.

2. The combination as defined in claim **1;**

said rods being four in number and connected to two spaced locations on each side of said canopy, said rods each having a fixed length such that said canopy is in the desired attitude when reaching said forward, open position.

3. The combination as defined in claim **1;** said rigid link being slidably mounted on said mast for movement into a position for connecting with said forward portion, and fastening means for fixing the position of said link on said mast when said link is in said position for connection with said forward portion.

4. In combination with a sailboat which has an interior cabin, said cabin being substantially closed by walls, an access opening formed through said walls into said cabin, the improvement comprising:

a canopy adapted to cover the upper portion of said access opening, said canopy connected by a first means to said walls and being pivotally movable between an open position spaced from said access opening and a closed position covering the upper portion of said access opening;

said first means comprising a plurality of spaced apart rods pivotally connected to both said canopy and said walls, said rods being four in number, the movement of said canopy from said closed position to said open position results in said canopy being pivoted upward and forward with respect to said cabin;

said sailboat having a mast connected to said sailboat forward of said access opening, when said canopy is in said open position said canopy to contact said mast;

second means connected between said mast and said canopy to maintain said canopy in the open position;

said second means including a longitudinal groove formed along the aft end of said mast, a U-shaped fastener having a pair of spaced apart legs separated by a slot, one of the legs of said fastener to cooperate within said groove in said mast and be slidable therein, said canopy having a downward extending peripheral edge, with said canopy in said open position said downward peripheral edge of

said canopy to extend within said slot of said fastener thereby preventing movement of said canopy to said closed position, said fastener including third means to be movable within said groove of said mast to frictionally bind said fastener to said mast.

5. The combination as defined in claim **4** wherein said second means includes:

said canopy having a recess formed therein, when said canopy is in said open position said mast to extend within said recess.

6. The combination as defined in claim **4** including:

said canopy includes a hatch cover, said hatch cover being slidably mounted upon said canopy between a forward position and an aft position.

* * * * *

Disclaimer

3,805,724.—*Frank W. Butler*, Westlake Village, Calif. SAILBOAT CANOPY APPARATUS. Patent dated Apr. 23, 1974. Disclaimer filed May 9, 1977, by the inventor.

Hereby enters this disclaimer to claims 1 and 2 of said patent.

[*Official Gazette July 26, 1977.*]